RENAULT

1. Fault finding – Introduction

1.1 Document applicability

This document presents the fault finding method applicable to all computers with the following specifications:

Vehicle(s): **TWIZY**	*Name of computer:* **charger**
Function concerned: **charger/converter**	*Vdiag No.:* **04**

1.2 Prerequisites for fault finding

Documentation type

Fault finding procedures for the instrument panel:
– Assisted fault finding (integrated into the **diagnostic tool)**, Dialogys.

Wiring Diagrams:
– Visu-Schéma.

Type of diagnostic tools
– CLIP

Special tooling required

Special tooling required:	
	Diagnostic tool
	Multimeter
Elé. 1622	Bornier
Elé. 1681	Universal bornier

If the information obtained by the diagnostic tool requires the electrical continuity to be checked, connect bornier Elé. 1622 or universal bornier Elé. 1681.

WARNING:
– All checks using bornier **Elé. 1622** or **Elé. 1681** must be performed with the battery disconnected.
– The bornier is only designed to be used with a multimeter. Never power the test points with **12 V**.

1.3 Reminders

Procedure

To run diagnostics on the vehicle computers, switch on the ignition using the key.

Faults
Faults are declared present or stored (depending on whether they appeared in a certain context and have disappeared since, or whether they remain present but are not diagnosed within the current context).

The **present** or **stored** fault status must be considered, when the **diagnostic tool** is used after switching on the **+ after ignition feed** (without operating the system components).

For a **present fault**, apply the procedure described in the **Interpretation of faults** section.

For a **stored fault**, note the faults displayed and apply the **Notes** section.

If the fault is **confirmed** when the instructions are applied, the fault is present. Deal with the fault.

If the fault is **not confirmed**, check:
– the electrical lines which correspond to the fault,
– the connectors on these lines (corrosion, bent pins, etc.),
– the **resistance** of the faulty component,
– the condition of the wires (melted or cut insulation, wear).

Conformity check
The conformity check is designed to check the statuses and parameters that do not display any faults on the **diagnostic tool** when they are inconsistent. Therefore, this stage is used to:

– carry out fault finding on faults that do not have a fault display, and which may correspond to a customer complaint,
– check that the system is operating correctly and that there is no risk of a fault recurring after repair.

This section gives the fault finding procedures for statuses and parameters and the conditions for checking them.

If a status is not behaving normally or a parameter is outside permitted tolerance values, you should consult the corresponding fault finding page.

Customer complaints - Fault finding chart

If the test with the **diagnostic tool** is OK but the customer complaint is still present, the fault should be dealt with by **customer complaints**.

A summary of the overall procedure to follow is provided on the following page in the form of a flow chart.

1.4 Fault finding procedure

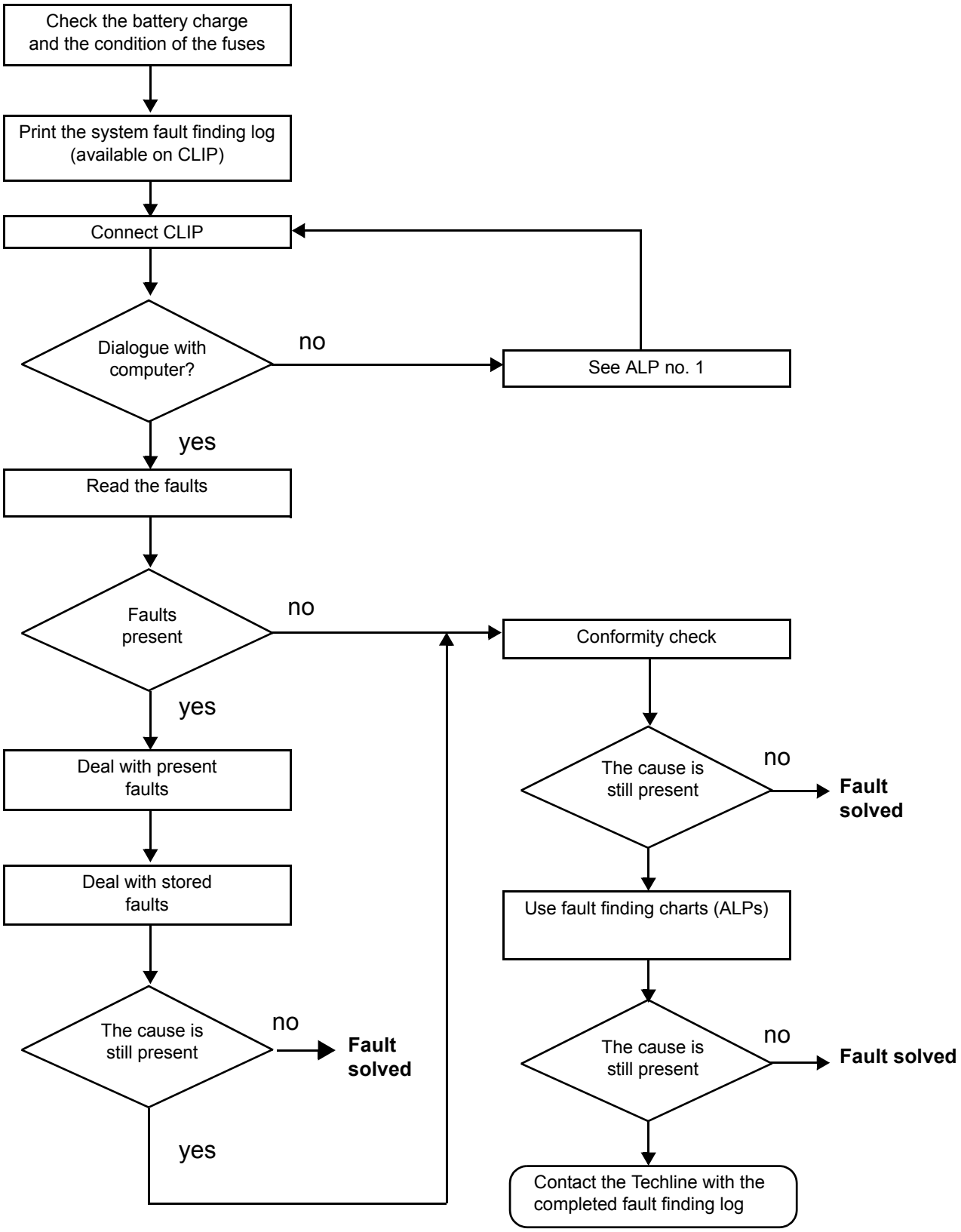

Wiring check

Note:
Carry out each requested check visually. Do not remove a connector if it is not required.

Note:
Repeated connections and disconnections alter the functionality of the connectors and increase the risk of poor electrical contact. Limit the number of connections/disconnections as much as possible.

Note:
The check is carried out on the 2 parts of the connection. There may be two types of connection:
– Connector / Connector
– Connector / Device

Fault finding problems
Disconnecting the connectors and/or manipulating the wiring may temporarily clear the cause of a fault.
Electrical measurements of voltage, resistance and insulation are generally correct, especially if the fault is not present when the analysis is made (stored fault).

Visual inspection of the connection:
- Check that the connector is connected correctly and that the male and female parts of the connection are correctly coupled.

Visual inspection of the area around the connection:
- Check the condition of the mounting (pin, strap, adhesive tape, etc.) if the connectors are attached to the vehicle.
- Check that there is no damage to the wiring trim (sheath, foam, adhesive tape, etc.) near the wiring.
- Check that there is no damage to the electrical wires at the connector outputs, in particular on the insulating material (wear, cuts, burns, etc.).

Disconnect the connector to continue the checks.

Visual inspection of the plastic casing:
- Check that there is no mechanical damage (casing crushed, cracked, broken, etc.), in particular to the fragile components (lever, lock, openings, etc.).
- Check that there is no heat damage (casing melted, darker, deformed, etc.).
- Check that there are no stains (grease, mud, liquid, etc.).

Visual inspection of the metal contacts:
(The female contact is called CLIP. The male contact is called TAB.)
- Check that there are no bent contacts (the contact is not inserted correctly and can come out of the back of the connector). The spring contact of the connector when the wire is gently pulled.
- Check that there is no damage (folded tabs, clips open too wide, blackened or melted contact, etc.).
- Check that there is no oxidation on the metal contacts.

Visual inspection of the sealing:
(Only for watertight connectors)
- Check for the seal on the connection (between the 2 parts of the connection).
- Check the seal at the back of the connectors:
- *For unit* joints (1 for each wire), check that the unit joints are present on each electrical wire and that they are correctly positioned in the opening (level with the housing). Check that plugs are present on openings which are not used.
- For a *grommet* seal (one seal which covers the entire internal surface of the connector), check that the seal is present.
- For *gel* seals, check for gel in all of the openings without removing the excess or any protruding sections (it does not matter if there is gel on the contacts).
- For *hotmelt* sealing (heat-shrink sheath with glue), check that the sheath has contracted correctly on the rear of the connectors and electrical wires, and that the hardened glue comes out of the side of the wire.
- Check that there is no damage to any of the seals (cuts, burns, significant deformation, etc.).

If a fault is detected, repair or replace the wiring (see **Technical Note 6015A, Electrical wiring repair, Wiring: Precautions for repair**).

1.5 Fault finding log

IMPORTANT!

IMPORTANT
All faults involving a complex system call for thorough diagnostics with the appropriate tools. The FAULT FINDING LOG, which should be completed during the fault finding procedure, ensures a record is kept of the procedure carried out. It is an essential document when consulting the manufacturer.

IT IS THEREFORE MANDATORY TO FILL IN A FAULT FINDING LOG EACH TIME IT IS REQUESTED BY TECHLINE OR THE WARRANTY RETURNS DEPARTMENT.

You will always be asked for this log:
- when requesting technical assistance from the Techline,
- when requesting approval before replacing parts for which approval is compulsory,
- to be attached to monitored parts for which reimbursement is requested. The log is needed for warranty reimbursement, and enables better analysis of the parts removed.

1.6 Safety instructions

The safety instructions must be followed at all times when working on components, to avoid damage or injury:

– make sure that the battery is properly charged to avoid damaging the computers in the event that it has a low charge,
– The drive system of an electric vehicle uses a direct current of approximately 60 volts. This system may be hot during and after switching off the ignition. Respect the warning messages on the labels present inside the vehicle. The electric circuit can be recognised by the orange colour wiring and the components marked with the symbol ⚡.
– Use the appropriate tools:

– Remove all metal jewellery (wedding rings, bracelets, watches) or any item likely to be a conductor.

Additional adaptation unit

Fault finding - List and location of components

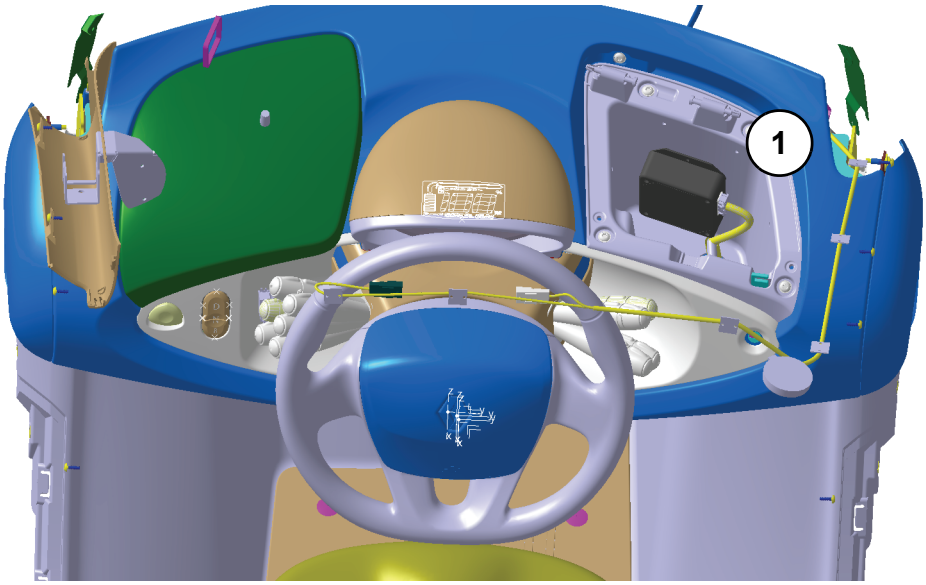

1	BAC	Additional adaptation unit

The system is made up of the following components:
– An additional adaptation unit
– A car club computer that is connected to the additional adaptation unit

Additional adaptation unit

The additional adaptation unit is a computer that serves as a multiplex line gateway and can control the power relays.

This unit performs the following functions:

- It authorises starting once authentication is successful
- It transmits vehicle multiplex line messages to the car club computer

Configuration of the additional adaptation unit

The additional adaptation unit cannot be configured.
After the part has been replaced, it is not necessary to configure it using the CLIP tool.
The additional adaptation unit is already configured.

Fault related to the additional adaptation unit

Tool fault	Computer/fault codes	Diagnostic tool title
DF016	9644	INTERNAL FAULT
DF017	9214	STARTING RELAY
DF018	9129	KEY CODE AUTHENTICATION
DF019	C001	MULTIPLEX COMMUNICATION CIRCUIT

DF016 PRESENT OR STORED	INTERNAL FAULT

NOTES	**Note:** The adaptation unit must be replaced
	Special note: Use the **Wiring Diagrams Technical Note for Twizy**.

Switch off the + after ignition feed. Switch the + after ignition feed back on and check for the fault again. If the fault is still present, replace the **additional adaptation unit**, component code **316-32A.**
If the fault is still present, contact the Techline.

DF017 PRESENT OR STORED	STARTING RELAY

NOTES	**Note:** Short circuit on the output of the additional adaptation unit going to the starting relay.
	Special note: Use the **Wiring Diagrams Technical Note for Twizy**.

Check the condition of fuse **F03 (15 A) of the passenger compartment fuse and relay box**, component code **1016**. Replace the fuse if it is defective.
If the fuse blows again, check the **insulation** of the following connection:
- **BP56** between components **1016** and **316-32A**.

Check the relay, component code **304**, on the **passenger compartment fuse and relay box**, component code **1016**.

Check the **insulation, continuity** and the **absence of interference resistance** on the following connections:
- **163L** between components **316-32A BAC*** and **234 starting relay**
- **163K** between components **316-32A BAC*** and **234 starting relay**
- **163J** between components **2152 (or other car club computer*)** and **316-32A BAC***
- **163I** between components **2152 (or other car club computer)** and **316-32A BAC***

If the connection is faulty and if there is a repair procedure (see **Technical Note 6015A (Renault), Electrical wiring repair, Wiring: Precautions for repair**), repair the wiring, otherwise replace the wiring.

If the fault is still present, contact Techline before replacing the additional adaptation unit, component code 316-32A.

*BAC: additional adaptation unit
*Car club computer: this is responsible for managing the Twizy car club fleet.

DF018 PRESENT OR STORED	KEY CODE AUTHENTICATION

NOTES	**Note:** It counts the number of authentication failures between the car club system and additional adaptation unit M09.
	Special note: Use the **Wiring Diagrams Technical Note for Twizy**.

Check the condition of fuse **F03 (15 A) of the passenger compartment fuse and relay box**, component code **1016**. Replace the fuse if it is defective.
If the fuse blows again, check the **insulation** of the following connection:
- **BP56** between components **1016** and **316-32A**.

Check that the computers are correctly supplied (earth, + battery, + accessories or + after ignition).

Check the **insulation, continuity** and the **absence of interference resistance** on the following connections:
- **107W** between components **316-32A** and **225**
- **107X** between components **316-32A** and **225**
- **133B** between components **316-32A** and **2152***
- **133C** between components **316-32A** and **2152***

If the connection is faulty and if there is a repair procedure (see **Technical Note 6015A (Renault), Electrical wiring repair, Wiring: Precautions for repair**), repair the wiring, otherwise replace the wiring.

If the fault is still present, replace the **car club computer**, component code **2152***.

If the fault is still present, contact Techline before replacing the **BAC***, component code **316-32A**.

*2152 or other car club computer
*BAC: additional adaptation unit

DF019 PRESENT OR STORED	MULTIPLEX COMMUNICATION CIRCUIT

NOTES	**Note:** The adaptation unit no longer transmits messages over the multiplex line.
	Special note: Use the **Wiring Diagrams Technical Note for Twizy**.

Check the condition of fuse **F03 (15 A) of the passenger compartment fuse and relay box**, component code **1016**. Replace the fuse if it is defective.
If the fuse blows again, check the **insulation** of the following connection:
BP56 between components **1016** and **316-32A**.
Check the **connection** and **condition** of the **additional adaptation unit** connectors, component code **316-32A**.
If any of the connectors are faulty, and if there is a repair procedure (see **Technical Note 6015A (Renault), Electrical wiring repair, Wiring: Precautions for repair**), repair the connector, otherwise replace the wiring.
Check the **insulation, continuity** and the **absence of interference resistance** on the following connections:

- **107W** between components **316-32A** and **225**
- **107X** between components **316-32A** and **225**
- **133B** between components **316-32A** and **2152***
- **133C** between components **316-32A** and **2152***

If the connection is faulty and if there is a repair procedure (see **Technical Note 6015A (Renault), Electrical wiring repair, Wiring: Precautions for repair**), repair the wiring, otherwise replace the wiring.

If the fault is still present, contact Techline before replacing the **additional adaptation unit**, component code **316-32A**.

*2152 or other car club computer
*BAC: additional adaptation unit

Additional adaptation unit

Fault finding - Conformity check

NOTES	Only check conformity after a full check with the **diagnostic tool**. The values shown in this conformity check are given as a guide. Application condition: **engine off, ignition on**.

Parameter or status checked or action		Display and notes	Fault finding
ET025:	STARTING RELAY	**CLOSED** (This status must be "closed" when the ignition key is in position "**M**" (On).)	In the event of a fault, apply the interpretation of status **ET025**.
ET028:	VEHICLE STATUS	**OK** (This status must be "OK".)	In the event of a fault, apply the interpretation of status **ET028**.
ET027:	AUTHORISATION TO START	**OK** (This status must be "OK" if authentication is successful.)	In the event of a fault, apply the interpretation of status **ET027**.
ET024:	COMPUTER	**CONNECTED** (The normal status of the additional adaptation unit computer must be "connected".)	In the event of a fault, apply the interpretation of status **ET024**.

ET024	COMPUTER
ET025	STARTING RELAY
ET027	AUTHORISATION TO START
ET028	VEHICLE STATUS

ET024	COMPUTER

NOTES	There must be no **present** or **stored** faults. Switch on the ignition and perform the authentication procedure The status must be "CONNECTED".
	Special note: Use the Wiring Diagrams Technical Note for Twizy.

ET027: "FACTORY MODE / NOT CONNECTED / JAMMED / LOCKED / DEFECT MODE / TRANSIENT" with the ignition on

Switch off the + after ignition feed, switch the + after ignition feed back on and check the status again:
FACTORY MODE: The **additional adaptation unit** is jammed in factory mode.
JAMMED: This mode corresponds to a level 1 authentication fault. The **additional adaptation unit** is jammed for 10 seconds. Wait for 10 seconds and then check status **ET024** again.
LOCKED: This mode corresponds to a level 2 authentication fault. The **additional adaptation unit** is jammed for 20 minutes. Wait for 20 minutes and then check status **ET024** again.
DEFECT MODE: This mode corresponds to a level 3 authentication fault. The **additional adaptation unit** is locked; it will not exit this mode.
TRANSIENT: The additional adaptation unit is in initialisation mode; wait a moment. If the **additional adaptation unit** remains in this mode, switch the + after ignition feed off and then back on again and check status **ET024** again.
If the additional adaptation unit is jammed in one of these modes and the status does not change, apply the procedure related to fault DF018.
If the fault is still present, contact the Techline before replacing the **BAC***, component code **316-32A.**

ET025	STARTING RELAY

NOTES	There must be no **present** or **stored** faults. Switch on the ignition and perform the authentication procedure The status must be "closed".
	Special note: Use the Wiring Diagrams Technical Note for Twizy.

ET002: "OPEN / SHORT CIRCUIT / OPEN CIRCUIT" with the ignition on, authentication successful

Check fuse **F03** (**15 A**) of the **fuse holder module 2,** component code **1016.**
Check the connection and condition of the connectors between the additional adaptation unit and the car club computer. If the connector is faulty and if there is a repair procedure (see **Technical Note 6015A (Renault), Repairing electrical wiring, Wiring: Precautions for repair**), repair the connector, otherwise replace the wiring.
Check for **+12 V** on line **BP56.**
Check the **continuity** and **insulation to earth** of the following connection: • **BP56** between components **316-32A** and **1016**. If the connection or connections are faulty and if there is a repair procedure (see **Technical Note 6015A (Renault) or Technical Note 9804A (Dacia), Electrical wiring repair, Wiring: Precautions for repair**), repair the wiring, otherwise replace it.

ET025 CONTINUED	

Check for **+12 V** after ignition, and after successful authentication on line **163J,** between the additional adaptation unit, component code **316-32A,** and the starting relay, component code **234.** If the value corresponds to the expected value, replace the additional adaptation unit, component code **316-32A**.
If the value does not correspond to the expected value: Check the **continuity** and **insulation to earth** of the following connection: • **BP13** between components **104** and **1793**. If the connection or connections are faulty and if there is a repair procedure (see **Technical Note 6015A (Renault), Repairing electrical wiring, Wiring: Precautions for repair**), repair the wiring, otherwise replace it.
If the fault is still present, contact the techline.

ET027	STARTING AUTHORISATION

NOTES	There must be no **present** or **stored** faults. Switch on the ignition and perform the authentication procedure The status must be "closed".
	Special note: Use the Wiring Diagrams Technical Note for Twizy.

ET027: "NOT OK" with the ignition on

Check fuse **F03** (**15 A**) of the **fuse holder module 2,** component code **1016.**
Check the connection and condition of the connectors between the additional adaptation unit and the car club computer. If the connector is faulty and if there is a repair procedure (see **Technical Note 6015A (Renault), Repairing electrical wiring, Wiring: Precautions for repair**), repair the connector, otherwise replace the wiring.
Check for **+12 V** on line **BP56.**
Check the **continuity** and **insulation to earth** of the following connection: • **BP56** between components **316-32A** and **1016**. If the connection or connections are faulty and if there is a repair procedure (see **Technical Note 6015A (Renault) or Technical Note 9804A (Dacia), Electrical wiring repair, Wiring: Precautions for repair**), repair the wiring, otherwise replace it.

ET027 CONTINUED	

Check for **+12 V** after ignition, and after successful authentication on line **163J,** between the additional adaptation unit, component code **316-32A,** and the starting relay, component code **234.**
If the value does not correspond to the expected value: Check the **continuity** and **insulation to earth** of the following connection: • **BP56** between components **104** and **1793**. If the connection or connections are faulty and if there is a repair procedure (see **Technical Note 6015A (Renault), Repairing electrical wiring, Wiring: Precautions for repair**), repair the wiring, otherwise replace it.
Check the **insulation, continuity** and the **absence of interference resistance** on the following connections: • **107W** between components **316-32A** and **225** • **107X** between components **316-32A** and **225** • **133B** between components **316-32A** and **2152*** • **133C** between components **316-32A** and **2152*** If the connection is faulty and if there is a repair procedure (see **Technical Note 6015A (Renault), Electrical wiring repair, Wiring: Precautions for repair**), repair the wiring, otherwise replace the wiring.
If the fault is still present, replace the **car club computer**, component code **2152*.**
If the fault is still present, replace the **BAC***, component code **316-32A.**

2152*: Car club computer connected to the additional adaptation unit to manage car sharing
BAC*: additional adaptation unit

ET028	VEHICLE STATUS

NOTES	There must be no **present** or **stored** faults. Switch on the ignition and perform the authentication procedure The status must be "closed".
	Special note: Use the Wiring Diagrams Technical Note for Twizy.

ET002: "NOT OK" with the ignition on

Replace the **additional adaptation unit**, component code **316-32A.**

BAC: additional adaptation unit

Additional adaptation unit

Fault finding - Command summary table

Tool command	Diagnostic tool title	Comments
VP002	VIN entry	See interpretation of the command.
RZ001	Fault memory	Use this command to clear the faults stored in the computer.

VP014	ENTERING THE VIN

NOTES	This command enables the vehicle identification number to be entered manually in the computer. Use this command each time the computer is replaced. **The vehicle identification number is indicated on the manufacturer's plate on the right-hand side door pillar.**

Procedure for writing the VIN
- establish dialogue with the additional adaptation unit
- select the **"repair mode"** menu,
- select the **"Other parameters"** menu,
- select line **VP014**,
- enter the VIN twice,
- exit fault finding mode,
- switch off the ignition,
- wait for the end of **powerlatch**,
- re-read the VIN using **ID008 VIN code** in the **Identification** menu for confirmation.

RZ002	FAULT MEMORY

NOTES	Use this command to clear the faults stored in the computer.

TWIZY

8 Electrical equipment

88C AIRBAG AND PRETENSIONERS

Vdiag No.: 04
Computer type No.: 0406

Fault finding – Introduction	88C - 2
Fault finding – List and location of components	88C - 4
Fault finding – Role of components	88C - 6
Fault finding – Operating diagram	88C - 7
Fault finding – Function	88C - 9
Fault finding – Configuration	88C - 11
Fault finding – Programming	88C - 12
Fault finding – Summary table of faults	88C - 13
Fault finding – Interpretation of faults	88C - 14
Fault finding – Conformity check	88C - 26
Fault finding – Status summary table	88C - 30
Fault finding – Parameter summary table	88C - 31
Fault finding – Customer complaints	88C - 32
Fault finding – Fault finding charts	88C - 33

V2 **Edition Anglaise**

"The repair procedures given by the manufacturer in this document are based on the technical specifications current when it was prepared.

The procedures may be modified as a result of changes introduced by the manufacturer in the production of the various component units and accessories from which his vehicles are constructed."

All rights reserved by Renault s.a.s.

Copying or translating, in part or in full, of this document or use of the service part reference numbering system is forbidden without the prior written authority of Renault s.a.s.

© Renault s.a.s. 2012

1. APPLICABILITY OF THE DOCUMENT

This document presents the fault finding procedure applicable to all computers with the following specifications:

Vehicle(s): **TWIZY**	*Computer name*: **TEMIC Airbag**
	Computer type no.: **04-06**
Function concerned: **AIRBAG**	*Vdiag No.:* **04**

2. PREREQUISITES FOR FAULT FINDING

Documentation type

Fault finding procedures (this manual):
- Assisted fault finding (integrated into the **diagnostic tool)**, Dialogys.

Wiring Diagrams:
- Visu-Schéma.

Type of diagnostic tools
- **CLIP + Set of adapters and borniers used for the airbag wiring check function, including the 30-track ELO socket type adapter with 5 shunts, coding D-H, TYCO, orange colour, part number 9-1393474-4, Elé. 1830.**

Special tooling required

Special tooling required:	
Diagnostic tool	
Adapters **B32, B35**	
Elé. 1641	Bornier B55
Elé. 1617	(3/4)
Elé. 1830	30-track computer bornier
Elé. 1681	Airbag and pretensioner destruction tool

3. REMINDER

Procedure
To run fault finding on the vehicle computers, switch on the ignition.
Connect the diagnostic tool and perform the required operations.

Safety instructions

All operations on the airbag system must be carried out by qualified trained personnel.

Safety rules must be observed during any work on a component to prevent any damage or injury:
– make sure that the battery is properly charged to avoid damaging the computers with a low load,
– use the appropriate tools,
– During any operation on the airbag system, it is essential to use the computer locking command to avoid any risk of accidental triggering (all the trigger lines will be inhibited).

IMPORTANT:
During any operation on the airbag system, it is essential to use the computer locking command to avoid any risk of accidental triggering (all trigger lines will be inhibited).
The locked mode is signalled when the instrument panel warning light comes on.

Note:
If the operation is being performed following an impact that triggered the airbags, the computer cannot be locked until the unlocking command has been given.
After an impact that triggered the airbags, the faults stored in the computer cannot be cleared until the "Read impact context" command has been given, followed by the unlocking command.

Never measure the airbag trigger lines using any tool other than the **XRBAG** or the airbag wiring check function on the **CLIP** and **NXR** tools.

Before using a dummy ignition module, check that its resistance is between **1.8** Ω and **2.5** Ω.

During the procedure, check to ensure that the computer voltage does not drop below **10 V**.

Symbol	Description
1	Driver's frontal airbag

1. DRIVER'S FRONTAL AIRBAG

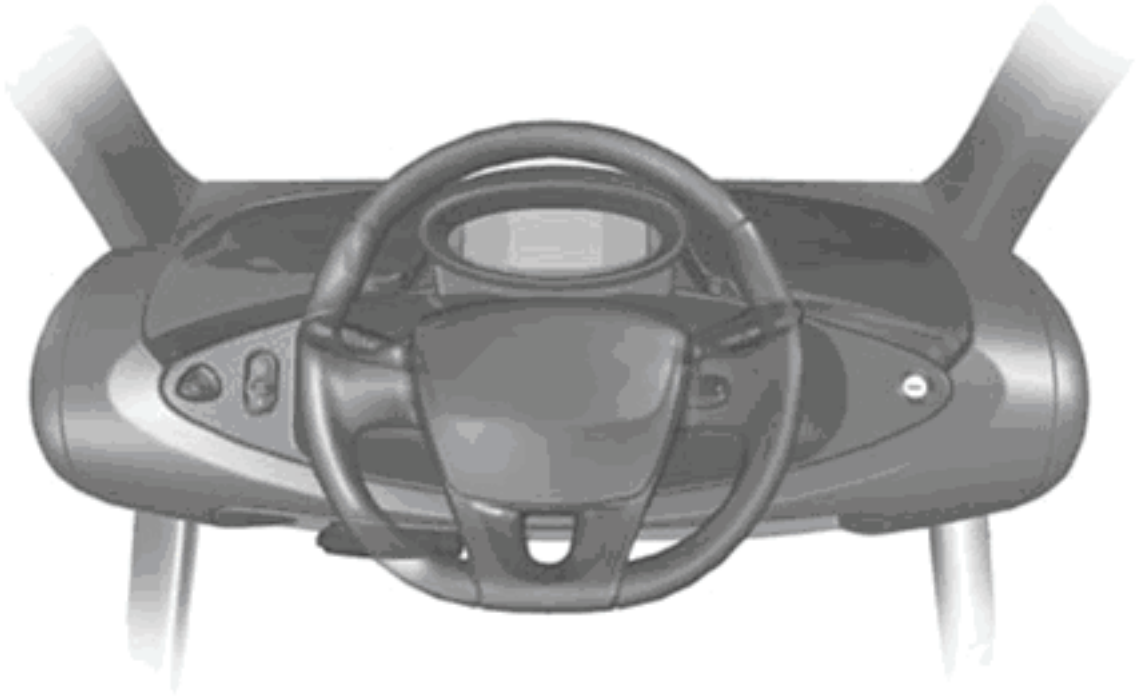

System outline

Number	Description
1	Airbag computer
14	Instrument panel (warning light functions)

Passive Safety Architecture – Computer with 1 trigger line.

Driver's frontal airbag

3-point seat belt
at the front

Additional 2-point
seat belt at
the front

3-point seat belt
at the rear

Driver's frontal airbag.
The role of the driver's frontal airbag is to protect the driver's head in the event of frontal impact.

Airbag computer.
The role of the airbag computer is to control the vehicle's restraint devices intended to ensure the protection of the driver.

FAULT FINDING - CONFIGURATION SHEET system with 1 trigger line.

A	COMPUTER
E	DRIVER'S AIRBAG IGNITION MODULE
CT	ROTARY SWITCH
C0	30-TRACK AIRBAG COMPUTER CONNECTOR
C2 C4	2-TRACK CONNECTORS

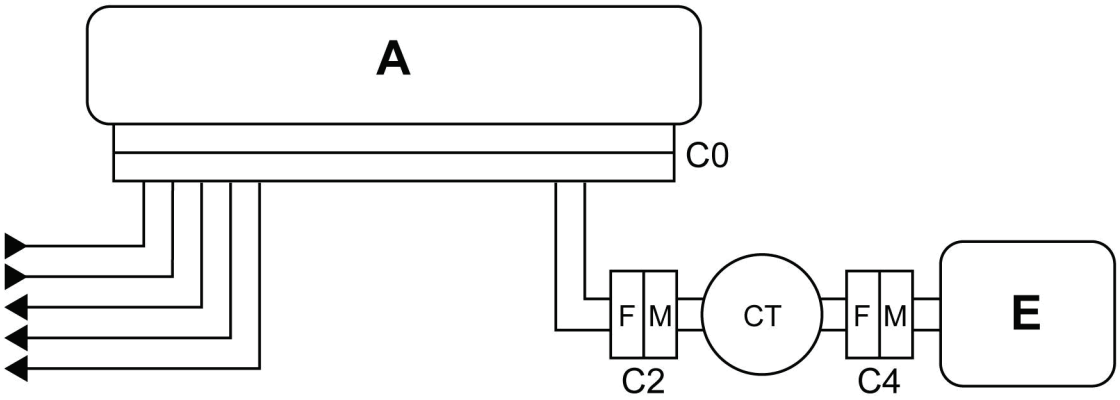

0000001137

	DRIVER'S FRONTAL AIRBAG	
	Measuring point	Correct value
Driver	C0, C2 and C4	**1.3** Ω to **5.2** Ω
	DRIVER'S CHEST-LEVEL AIRBAG	
	Measuring point	Correct value
Driver	C1	**1.3** Ω to **5.2** Ω
	DRIVER'S PRETENSIONER	
	Measuring point	Correct value
Driver	C1	**1.3** Ω to **5.2** Ω

The airbag computer controls all of the vehicle's restraint devices intended to ensure the protection of the driver. The computer is designed to carry out the following functions:
– detection and confirmation of front longitudinal impacts,
– corresponding activation of the pyrotechnic restraint devices (e.g.: airbag),
– management of the function inhibiting the trigger lines and the lateral acceleration sensors,
– management and monitoring of the **Airbag fault** and **Airbag Off** warning lights on the instrument panel (wire connections),
– activation of the **crash output** signal in the event of a crash (wire connection),
– management of the fault finding signals (signals provided by the fault manager in response to fault finding requests, whether this consists of internal faults or input/output fault finding).

Special notes:
– Longitudinal impacts:
The detection of frontal or rear longitudinal impacts takes into account the signals from the internal accelerometers of the computer.

A frontal algorithm produces a characterisation of the impact using the sensor signals in order to trigger the protection. It generates a "**crash output**" signal to inform the other computers that a crash has been detected. The programming applied by the various computers likely to use this information is not described in this functional description.

– Management and monitoring of the airbag warning light:
The airbag computer controls and checks the status of the **Airbag fault** and **Airbag Off** warning lights on the instrument panel. These signals are exchanged via wire.

The **Airbag fault** warning light illuminates for **4 seconds** when the ignition is switched on **(+ after ignition)**, the time necessary for the system to be operational after the vehicle is started. It then remains off except under the following conditions:
• detection and recording of an airbag system fault (input - output fault, configuration fault),
• a crash has been detected and registered,
• if the computer is **crash locked** by a **diagnostic tool**,
• if the computer must be programmed or reprogrammed

– Activation of "Crash output" signal.
A "**crash output**" signal is transmitted by a wire, according to the type of impact, in order to inform the other computers that a crash has been detected.

The functionality described below is given for information and cannot in any case be considered as contractual.

– Management of fault finding signals.
1. fault finding of internal functions (self-test when switched on, verification of the configuration),
2. fault finding of external functions (pyrotechnic ignition modules and sensors),
3. fault finding of the power supply,
4. storage of faults identified when the vehicle is started, while the electric motor is running, or when the ignition is switched off,
5. permanent storage of the parameters relating to the crash algorithm and signals recorded during the crash,
6. permanent storage of system faults present before a crash,
7. control of the warning lights and the crash output signal.

The airbag system components must be configured in accordance with the vehicle equipment criteria.

All the inputs and outputs of the airbag computer (ignition modules and sensors) are configurable independently of one another.

Any incorrect configuration is detected by the recording of the fault and the illumination of the Airbag fault warning light:
– "open circuit" fault if an ignition module (or sensor) is configured, when the component is not connected,
– "configuration" fault if an ignition module (or sensor) is de-configured when the component is connected.

If necessary, a command can be issued to return to the default configuration (configuration of the computer as delivered)

-	To make it easier to configure the TEMIC AIRBAG computer, the **diagnostic tool** has automatic configuration commands for the trigger lines and sensors according to the equipment installed in the various models.
The commands in the following table, however, are used to configure each system component individually to adapt the computer configuration to the actual equipment in the vehicle.	
-	The read-configuration commands (**LCxxx**) are used to display the current computer configuration in relation to the trigger lines and sensors installed in the vehicle.
-	The configuration commands (**CFxxx**) are used to adapt the computer configuration to the equipment actually installed in the vehicle.

CONFIGURABLE FEATURES:

Trigger lines "WITH" or "WITHOUT"

Diagnostic tool title	Configuration reading	Configuration
DRIVER'S FRONTAL AIRBAG	**LC027**	**CF209**

Vehicle type reading: LC034 "LOGAN"

PARAMETER SETTINGS:

VP006: Lock computer.
This command should be used for any operation on the system. It is used to inhibit all trigger lines.

VP007: Unlock computer
This command is used to unlock a computer that is new or that has been locked by command **VP006**.

VP010: Enter VIN.
This command is used to enter the VIN number into the computer.

SC004: Read impact context
Use this command during repair of the vehicle following impact. It obtains, from the computer that is to be replaced, a list of the trigger lines controlled and the system's status at the moment of impact.

Replacing a system component

Disconnect the battery before any removal or refitting operation involving a pyrotechnic component (airbag module). The computer must always be locked before any operation on a system component.

Replacing the airbag computer

Before replacing the computer, it is essential to contact Techline.

It is prohibited to use command **RZ001 Clear fault memory** when **DF001 Computer** is **present** or **stored**, in order to allow the failure of the returned computer to be analysed.

The airbag computers are sold in locked mode to avoid all risk of accidental triggering (all ignition lines are inhibited).

The locked mode is indicated when the instrument panel warning light comes on.

Apply the following procedure when replacing an airbag computer:
– check that the ignition is switched off,
– replace the computer,
– modify the computer configuration if necessary,
– write the VIN in the computer using the **diagnostic tool** command **VP010 Write VIN**,
– switch off the ignition;
– carry out a check using the **diagnostic tool**,
– only unlock the computer if no fault is reported by the **diagnostic tool** and confirm that the warning light is out.

Tool fault	Associated DTC	Diagnostic tool title
DF001	**9080**	Computer
DF002	**9042**	Computer supply voltage
DF003	**9007**	Driver's frontal airbag circuit
DF034	**907E**	Computer locked
DF165	**9040**	Airbag fault warning light circuit
DF194	**907F**	Computer to be replaced following impact

DF001 PRESENT OR STORED	COMPUTER

NOTES	None.

Replace the airbag computer, component code 756 (see **MR 454, Mechanical, 88C, Airbags and pretensioners, Airbag computer: Removal – Refitting**).

AFTER REPAIR	Carry out the check again using the **diagnostic tool** and, if there is no fault, unlock the computer.

DF002 PRESENT OR STORED	COMPUTER SUPPLY VOLTAGE 1.def: 2.def: Supply voltage too high Supply voltage too low

NOTES	**Special notes:** Use adapter **Elé. 1830** to work on the computer connector.

Perform the operations necessary to obtain the correct supply voltage for the airbag computer, component code **756 (9 V ± 0.1 < correct voltage < 18 V ± 0.1)**.
Check the tightness and condition of the battery terminals, component code **107**.
Run fault finding on component **107** and the charging circuit (see **Technical Note 6014A (Renault), Checking the charging circuit**).
Check the **earth** on connection **NAP** of component **756.**
If the connection is faulty and if there is a repair procedure (see **Technical Note 6015A (Renault), Repairing electrical wiring, Wiring: Precautions for repair**), repair the wiring, otherwise replace the wiring.

Check the condition of the connections and ensure that they are correctly locked on the airbag computer.
If the connector is faulty and if there is a repair procedure (see **Technical Note 6015A (Renault), Repairing electrical wiring, Wiring: Precautions for repair**), repair the connector, otherwise replace the wiring.

If the fault is still present, contact Techline.

AFTER REPAIR	Carry out the check again using the **diagnostic tool** and, if there is no fault, unlock the computer.

DF003 PRESENT OR STORED	DRIVER'S FRONTAL AIRBAG CIRCUIT CO: Open circuit CC: Short circuit CC.0: Short circuit to earth CC.1: Short-circuit to + 12 volts 1.DEF: Configuration 2.DEF: Short circuit between trigger lines

NOTES	If **1.DEF,** check and modify the computer configuration.
	Special notes: Never carry out any measuring procedures on the trigger lines with any tool other than the **CLIP** tool. Use adapter **Elé. 1830** to work on the computer connector.

CO - CC	***NOTES***	None.

Lock the computer using command **VP006 Lock computer** and the **diagnostic tool**. Switch off the ignition and remove the steering wheel airbag, component code **899** (see **MR 454, Mechanical, 88C, Airbags and pretensioners, Driver's frontal airbag: Removal - Refitting**). Check that the steering wheel airbag is correctly connected.
Disconnect the airbag cushion and connect a dummy ignition module to the ignition module connector. Switch on the ignition and carry out a check using the **diagnostic tool**. If the fault becomes **stored**, replace the steering wheel airbag (see **MR 454, Mechanical, 88C, Airbag and pretensioners, Driver's frontal airbag: Removal - Refitting**).
With the ignition switched off, disconnect then reconnect the connector of the rotary switch, component code **689**. If the connector is faulty and if there is a repair procedure (see **Technical Note 6015A (Renault), Repairing electrical wiring, Wiring: Precautions for repair**), repair the connector, otherwise replace the wiring.

AFTER REPAIR	Clear the computer fault memory. Switch off the ignition. Carry out the check again using the **diagnostic tool** and, if there is no fault, unlock the computer. Destroy the steering wheel airbag (component **1249**) if it has been replaced (tool **Elé. 1287**).

AIRBAGTEMIC_V04_DF003

DF003 CONTINUED 1	

The **CLIP** tool must be used for checking resistance at **point C2** of the driver's airbag circuit.
If the value obtained is not correct, replace component **689** (see **MR 454, Mechanical, 84A, Controls - Signals, Rotary switch: Removal - Refitting**).

Reconnect component **689**, disconnect the airbag computer connector and fit **Elé. 1830.**
The **CLIP tool** must be used to measure the resistance on the **cable marked A** of adapter **Elé. 1830**.
If the value obtained is not correct, check the connections on the computer connector between connections **60AM** and **60AN**.
If the connector is faulty and if there is a repair procedure (see **Technical Note 6015A (Renault), Repairing electrical wiring, Wiring: Precautions for repair**), repair the connector, otherwise replace the wiring.

If the checks carried out have not shown the presence of a fault, check on the base of the airbag computer for the presence of the **seven shunt opening pins** of the computer connector.
Check the condition of the airbag computer connections, component code **756**.
Check the condition of the airbag computer connector (locking system, connections, etc.).
If the connector is faulty and if there is a repair procedure (see **Technical Note 6015A (Renault), Repairing electrical wiring, Wiring: Precautions for repair**), repair the connector, otherwise replace the wiring.

AFTER REPAIR	Clear the computer fault memory. Switch off the ignition. Carry out the check again using the **diagnostic tool** and, if there is no fault, unlock the computer. Destroy the steering wheel airbag (component **1249**) if it has been replaced (tool **Elé. 1287**).

DF003 CONTINUED 2	

CC.0 - CC.1	*NOTES*	None.

Lock the computer using command **VP006 Lock computer** and the **diagnostic tool**.
Switch off the ignition and remove the steering wheel airbag, component code **899** (see **MR 454 Mechanical, 88C, Airbag and pretensioner, Driver's frontal airbag: Removal - Refitting**).
Check the condition and correct connection of the firing line.

The **CLIP** tool must be used for measuring insulation appropriate to the type of fault at **point C2** of the driver's frontal airbag circuit.
If the value obtained is not correct, replace the rotary switch, component code **689** (see **MR 454 Mechanical, 84A, Controls – Signal, Rotary switch: Removal - Refitting**).

Reconnect component **689**, disconnect the airbag computer connector and fit **Elé. 1830.**
It is essential to use the **CLIP** tool for measuring resistance on the **cable marked A** of the adapter. **Elé. 1830 (1.3 Ω < correct resistance < 5.2 Ω)**.
If the value obtained is not correct, check the connections on the computer connector between connections **60AM** and **60AN**.
If the connector is faulty and if there is a repair procedure (see **Technical Note 6015A (Renault), Repairing electrical wiring, Wiring: Precautions for repair**), repair the connector, otherwise replace the wiring.

AFTER REPAIR	Clear the computer fault memory. Switch off the ignition. Carry out the check again using the **diagnostic tool** and, if there is no fault, unlock the computer. Destroy the steering wheel airbag (component **1249**) if it has been replaced (tool **Elé. 1287**).

DF003 CONTINUED 3	

2.DEF	***NOTES***	**Special notes:** This fault corresponds to the detection of a short circuit between 2 trigger lines.

Lock the computer using command **VP006 Lock computer** and the **diagnostic tool**.
If there are not a combination of faults, identify the parameters of another trigger line involved in the short circuit in the screen.
Check the **insulation** of the circuits of the two ignition modules concerned between the following connections:
- **60AM** and **60AN** of component **689.**

If the connection or connections are faulty and if there is a repair procedure (see **Technical Note 6015A (Renault), Repairing electrical wiring, Wiring: Precautions for repair**), repair the wiring, otherwise replace the wiring.

If the fault is still present, contact Techline.

AFTER REPAIR	Clear the computer fault memory. Switch off the ignition. Carry out the check again using the **diagnostic tool** and, if there is no fault, unlock the computer. Destroy the steering wheel airbag (component **1249**) if it has been replaced (tool **Elé. 1287**).

DF034 PRESENT	COMPUTER LOCKED 1.DEF: Computer locked

NOTES	None.

This fault allows display of the locked state of the computer.
When it is **present**, all the trigger lines are inhibited, preventing triggering of the airbags.
This fault is normally **present** in two cases:
– the computer is new (it is sold locked),
– the computer locking command using the **fault finding tool** was used during an operation on the vehicle.

If the fault is still present, contact Techline.

AFTER REPAIR	Carry out the check again using the **diagnostic tool** and, if there is no fault, unlock the computer.

AIRBAGTEMIC_V04_DF034P

DF165 PRESENT OR STORED	AIRBAG FAULT WARNING LIGHT CIRCUIT CC.1: Short-circuit to + 12 volts CC.0: Open circuit or short circuit to earth

NOTES	**Special notes:** Use adapter **Elé. 1830** to work on the computer connector.

CC.1	***NOTES***	None.

Lock the computer using command **VP006 Lock computer** and the **diagnostic tool**.
Check the condition of the warning light bulb.
Check the **insulation** against **+ 12 V** on connection **60A** between components **247** and **756**.
If the connection is faulty and if there is a repair procedure (see **Technical Note 6015A (Renault), Repairing electrical wiring, Wiring: Precautions for repair**), repair the wiring, otherwise replace the wiring.

AFTER REPAIR	Carry out the check again using the **diagnostic tool** and, if there is no fault, unlock the computer.

DF165 CONTINUED 1	

CO.1	*NOTES*	None.

Warning light off under + after ignition feed

Lock the computer using command **VP006 Lock computer** and the **diagnostic tool**.
Check the status of the airbag fault warning light.
Check **the continuity** on connection **60A** between components **247** and **756**.
Check for **+12 V** on connection **60A** (on the warning light) of component **247**.
If the connection or connections are faulty and if there is a repair procedure (see **Technical Note 6015A (Renault), Repairing electrical wiring, Wiring: Precautions for repair**), repair the wiring, otherwise replace it.
If the checks carried out did not show the presence of a fault, disconnect the computer connector and fit **Elé.1830**.
Use the **CLIP tool** function for testing the instrument panel warning light, component code **247**, using the **grey cable marked 1** of adapter **Elé. 1830**.
If the warning light can be lit by the tool, replace the airbag computer, component code **756** (see **MR 454, Mechanical, 88C, Airbag and pretensioners, Airbag computer: Removal - Refitting**).
If not, repeat the checks described previously.

AFTER REPAIR	Carry out the check again using the **diagnostic tool** and, if there is no fault, unlock the computer.

DF165 CONTINUED 2	

Warning light on under + after ignition feed

Lock the computer using command **VP006 Lock computer** and the **diagnostic tool**. Disconnect the airbag computer and check the base for the **5 pins** which open the connector shunts. Check the **insulation** from **earth** on connection **60A** between components **247** and **756**. If the connection or connections are faulty and if there is a repair procedure (see **Technical Note 6015A (Renault), Repairing electrical wiring, Wiring: Precautions for repair**), repair the wiring, otherwise replace it.
If the fault is still present, contact Techline.

NOTES	If **1.DEF**, check and modify the **computer configuration**.
	Special notes: Never carry out measuring operations on trigger lines using any tool other than CLIP or XRBAG. Use the 30-track (Elé. 1717) adapter to work on the computer connector.
	Use the **Wiring Diagrams Technical Note** for **TWIZY**.

AFTER REPAIR	Carry out the check again using the **diagnostic tool** and, if there is no fault, unlock the computer.

DF165 CONTINUED 3	

2.DEF	***NOTES***	**Special notes:** This fault corresponds to the detection of a short circuit between 2 trigger lines.

NOTES	**Special notes: Never carry out measuring operations on trigger lines using any tool other than CLIP or XRBAG.** Use the **30-track (Elé. 1717) adapter** for working on the **computer** connector and the **2-track B36 adapter** for working on the **inertia reel** connector.
	Use the **Wiring Diagrams Technical Note** for **TWIZY**.

AFTER REPAIR	Carry out the check again using the **diagnostic tool** and, if there is no fault, unlock the computer.

DF194 PRESENT	COMPUTER TO BE REPLACED FOLLOWING IMPACT

NOTES	None.

Contact the Techline.

AFTER REPAIR	Carry out the check again using the **diagnostic tool** and, if there is no fault, unlock the computer.

NOTES	Only carry out a conformity check after a **complete check** with the **diagnostic tool**. The values shown in this conformity check are given as examples. **Application condition: engine off, ignition on.**

FUNCTION: MAIN SCREEN

Parameter or state checked or action		Display and notes	Fault finding
ET144	Fault present or in memory	**YES or NO** This status indicates if the computer has detected at least a present or a stored fault.	In the event of a fault, apply the interpretation of the fault concerned.
ET073:	Computer locked by tool	**YES or NO** This status indicates whether or not the computer is locked.	In the event of a fault, apply the interpretation of DF034 **Computer locked**.
ET076:	Computer to replace	**YES or NO** This status indicates whether the computer should be replaced or not.	In the event of a fault, apply the interpretation of **DF001 Computer** and **DF194 Computer to be replaced following impact**.
ET010 :	Impact detected.	**YES or NO** This status indicates whether an impact has been detected by the computer.	In the event of a fault, apply the interpretation of **DF194 Computer to be replaced following impact**.

NOTES	Only carry out a conformity check after a **complete check** with the **diagnostic tool**. The values shown in this conformity check are given as examples. **Application condition: engine off, ignition on.**

FUNCTION: MAIN SCREEN (CONT.)

Parameter or state checked or action		Display and notes	Fault finding
ET074:	Command fault warning light.	**YES or NO** This status is used to check the request by the computer for the **"airbag fault"** indicator light to illuminate or not.	In the event of a fault, apply the interpretation of **DF165 Airbag fault warning light circuit**.
PR001:	Computer supply.	This parameter indicates the computer voltage supply. The voltage must be between 9 V < X < 14 V	In the event of a fault, apply the interpretation of **DF001 Computer**.

NOTES	Only carry out a conformity check after a **complete check** with the **diagnostic tool**. The values shown in this conformity check are given as examples. **Application condition: engine off, ignition on.**

FUNCTION: AIRBAG

SUB-FUNCTION: TRIGGERING

Parameter or state checked or action	Display and notes	Fault finding
PR013: Driver's frontal airbag resistance.	The resistance should be between: **1.2 Ω < X < 5.8 Ω** This value could be **99.9**Ω if the vehicle is not fitted with the airbag in question (see vehicle equipment). These parameters indicate the impedance in ohms on trigger lines.	In the event of a fault, apply the interpretation of **DF003 Driver's frontal airbag circuit**.

NOTES	Only carry out a conformity check after a **complete check** with the **diagnostic tool**. The values shown in this conformity check are given as examples. **Application condition: engine off, ignition on.**

FUNCTION: AIRBAG

SUB-FUNCTION: LOCK AIRBAGS

Parameter or state checked or action		Display and notes	Fault finding
ET073:	Computer locked by tool	**YES or NO** This status indicates whether or not the computer is locked.	In the event of a fault, apply the interpretation of DF034 **Computer locked**.

Tool status	Diagnostic tool title
ET010	Impact detected
ET073	Computer locked by tool
ET074	Command fault warning light
ET076	Computer to replace
ET144	Fault present or in memory

Tool parameter	Diagnostic tool title
PR001	Computer feed voltage
PR013	Driver's frontal airbag resistance

NOTES	**Only consult the customer complaints after performing a complete check with the diagnostic tool.**

ABSENCE OF DIALOGUE WITH THE AIRBAG COMPUTER	→ **ALP1**

ALP1	No dialogue with the airbag computer

NOTES	None.

Try to establish dialogue with a computer on another vehicle to **check that the diagnostic tool is not faulty. If** the diagnostic tool **is not causing the fault and dialogue cannot be established with any other computer on the same vehicle, it may be that a faulty computer is disrupting fault finding line** K**.**
Proceed by successive disconnections to locate this computer.
Check the battery voltage, component code **107** and perform the operations required to obtain the correct voltage **(10.5 V < battery voltage < 16 V).**

Check the presence and condition of the airbag computer supply voltage fuse. F11 (5 A) of the passenger compartment fuse box, component code **1016.**
Check that the computer connector is properly connected and check the condition of its wiring.
If the connector(s) are faulty and if there is a repair procedure (see **Technical Note 6015A (Renault), Repairing electrical wiring, Wiring: Precautions for repair**), repair the connector, otherwise replace the wiring.
Check that the supply to the computer is correct:
disconnect the airbag computer and use adapter **Elé. 1830** to work on the computer connector,
check and ensure the presence of **+ after ignition feed** between connections **AP25** and **NAP**.
If the connections are faulty and if there is a repair procedure (see **Technical Note 6015A (Renault), Repairing electrical wiring, Wiring: Precautions for repair**), repair the wiring, otherwise replace the wiring.

AFTER REPAIR	Carry out the check again using the **diagnostic tool** and, if there is no fault, unlock the computer.

AIRBAGTEMIC_V04_ALP1

ALP1 CONTINUED	

Check that the diagnostic socket, component code **225**, is correctly supplied on the following connections:
- **BP56** between components **225** and **1016 (+ before ignition feed)**,
- **MAM** and **NC** of component **225.**

Check the **continuity** and **insulation** of the following connection:
- **HK** between components **225** and **756.**

If the connections are faulty and if there is a repair procedure (see **Technical Note 6015A (Renault), Repairing electrical wiring, Wiring: Precautions for repair**), repair the wiring, otherwise replace the wiring.

If dialogue is still not established after these various checks, replace the airbag computer, component code **756** (see **Replacement of components**).

AFTER REPAIR	Carry out the check again using the **diagnostic tool** and, if there is no fault, unlock the computer.

AIRBAG COMPUTER: REMOVAL - REFITTING

Note, one or more warnings are present in this procedure

Equipment required
Diagnostic tool

WARNING

To avoid all risk of damage to the systems, apply the safety and cleanliness instructions and operation recommendations before carrying out any repair:

- (see 88C, Airbags and pretensioners, Airbag and pretensioners: Precautions for the repair) ,
- Vehicle: Precautions for the repair .

REMOVAL

1. REMOVAL PREPARATION OPERATION

WARNING

To avoid any risk of triggering when working on or near a pyrotechnic component (airbags or pretensioners), lock the airbag computer using the diagnostic tool.

When this function is activated, all the trigger lines are inhibited and the airbag warning light on the instrument panel lights up continuously (ignition on).

Lock the airbag computer using the Diagnostic tool(see Fault finding - Replacement of components) (88C, Airbags and pretensioners).

Disconnect the 12V supply circuit12 V supply circuit : Lockout - Removal of lockout .

Remove the front bumper upper stripExterior body front trim assembly: Exploded view .

Remove Exterior body side trim assembly: Exploded view :

- the A-pillar trims,
- the B-pillar trims,
- the body side trims.

Remove:

- the front seatFront seat assembly: Exploded view ,
- the rear seat.

Remove Interior body side trim assembly: Exploded view :

- the rear headlining,
- the rear side panel trims.

Remove the centre floorFloor trim assembly: Exploded view .

2. REMOVAL OPERATION

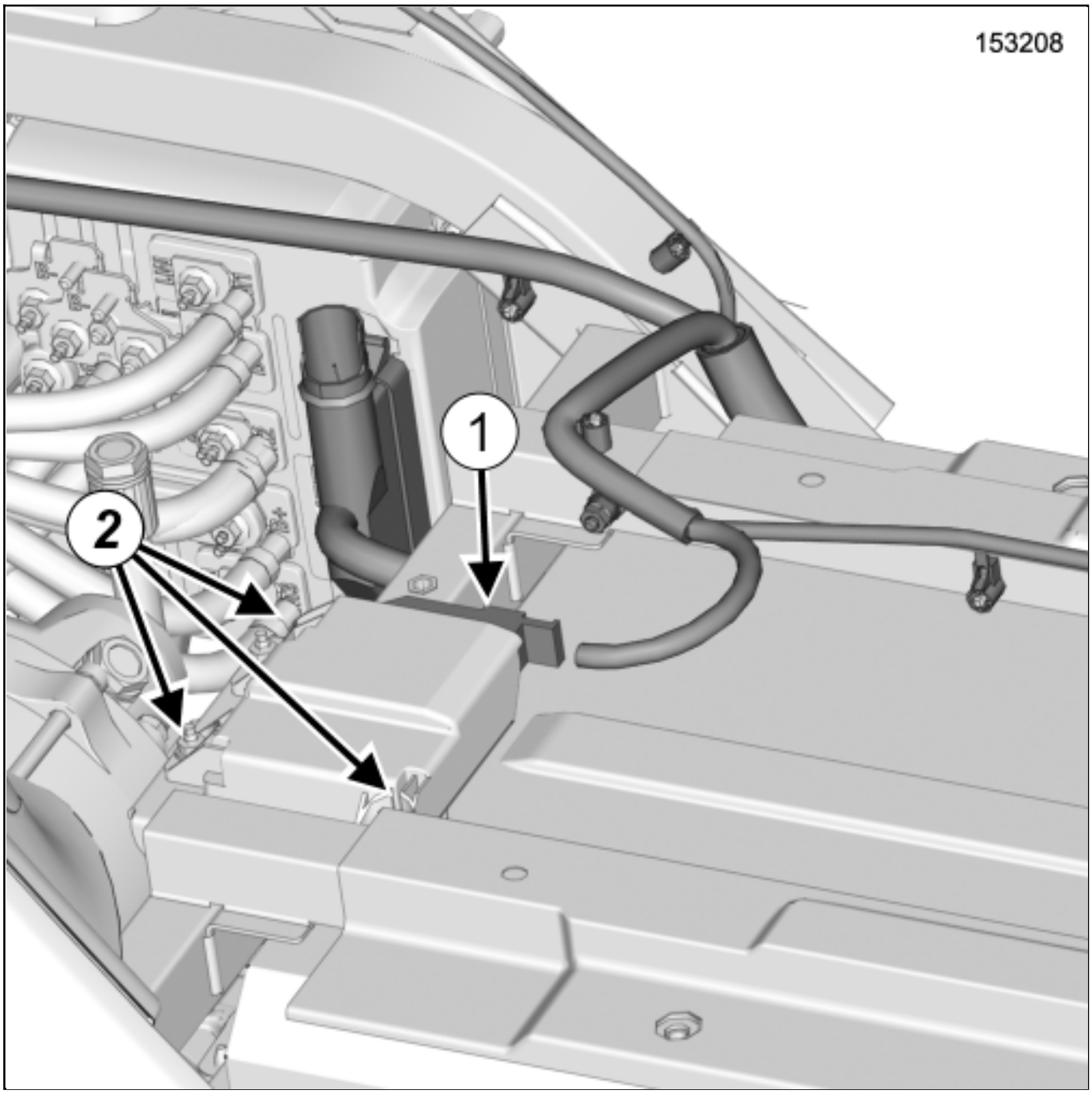

- Disconnect the airbag computer connector(1) .

- Remove:
  - the airbag computer nuts(2) ,
  - the airbag computer.

REFITTING

1. REFITTING OPERATION

- Proceed in the reverse order to removal.

- Torque tighten the airbag computer nuts8 N.m.

2. FINAL OPERATION

- Connect the 12V supply circuit12 V supply circuit : Lockout - Removal of lockout .

- If replacing, carry out the necessary operations using the Diagnostic tool(see Fault finding - Replacement of components) (88C, Airbags and pretensioners).

- Unlock the airbag computer using the Diagnostic tool(see Fault finding - Replacement of components) (88C, Airbags and pretensioners).

Repair-31x02x01x03-01x37-1-28-1.xml

XSL version : 3.02 du 22/07/11

- Lock the slip plates of the lift.

- Position the vehicle on a lift Vehicle: Towing and lifting .

- Check the condition of the following components:
  - track rods,
  - axial ball joint linkages,
  - subframe,
  - lower arm rubber bushes,
  - lower arm ball joints (see **Front driveshaft lower arm ball joint: Check**) ,
  - shock absorbers,
  - tyres.

- Check:
  - the tyre size Tyres: Identification ,
  - the tyre inflation pressure Tyre pressure: Identification .

- Put the vehicle in the VODM position (vehicle in running order) with the vehicle empty (without luggage, etc.).

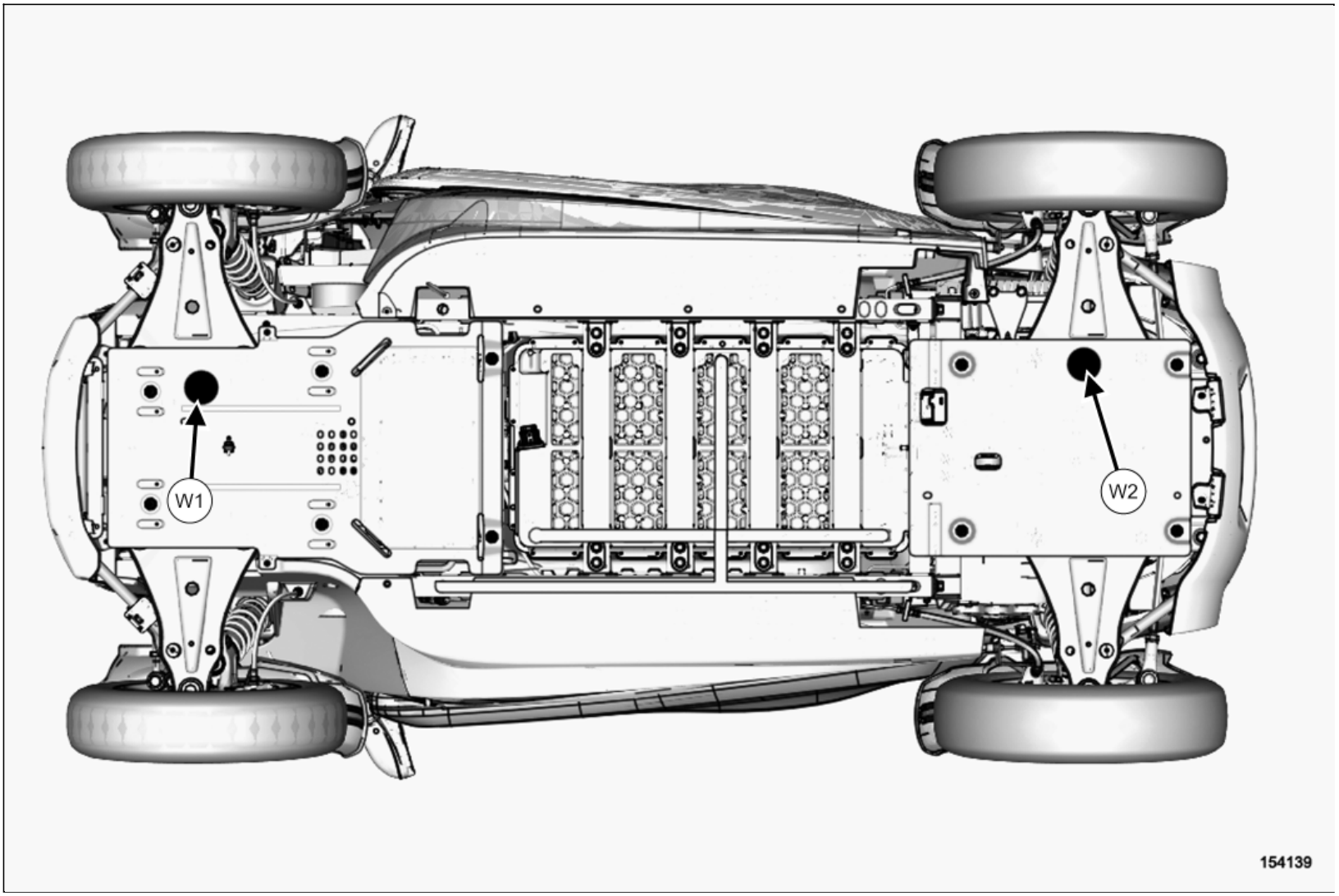

- The VODM values:
  - the front VODM value is119.4 mm (W1) ,
  - the rear VODM value is131.3 mm (W2) .
- Consult:
  - the front axle geometry values(see 30A, General information, Front axle assembly: Adjustment values) ,
  - the rear axle geometry values(see 30A, General information, Rear axle assembly: Adjustment values) .
- Refer to the user manual for the geometry tester.
- Check the geometry using the geometry tester.
- If there is an inconsistency between the manufacturer's values and the measured values:
- Adjust the rear axle(see 30A, General information, Rear axle system: Adjustment) .
- Adjust the front axle(see 30A, General information, Front axle system: Adjustment) .

XSL version : 3.02 du 22/07/11

RENAULT

Technical Note 6512A

XXXX

Battery charging

Edition 1 - AUGUST 2007 **Edition Anglaise**

"The repair procedures given by the Manufacturer in this document are based on the technical specifications current when it was prepared.

The procedures may be modified as a result of changes introduced by the manufacturer in the production of the various component units and accessories from which his vehicles are constructed."

All rights reserved by RENAULT.

Copying or translating, in part or in full, of this document or use of the service part reference numbering system is forbidden without the prior written authority of RENAULT.

© Renault s.a.s.

Contents

Page

80A BATTERY

Battery: General information, equipment to be used 80A-1
Battery: Charging 80A-2
Battery: Advice 80A-3

Battery: General information, equipment to be used

GENERAL INFORMATION

This Technical Note describes the procedure for charging the battery, as well as the equipment to use.

This note applies to all charging operations in the network.

RECHARGING EQUIPMENT TO BE USED

It is essential to use a charger from the list of special equipment selected by Renault in the catalogue **"Garage equipment / Catalogue 200x"**.

PRECAUTIONS:

The 2 battery terminals must be disconnected (see **corresponding MR, 80A, Battery, Battery: Removal-Refitting**).

Check that the degassing pipe is correctly positioned (depending on the equipment).

IMPORTANT
All these vehicles are equipped with a low water consumption battery.
Opening the battery and topping up the electrolyte level are prohibited.

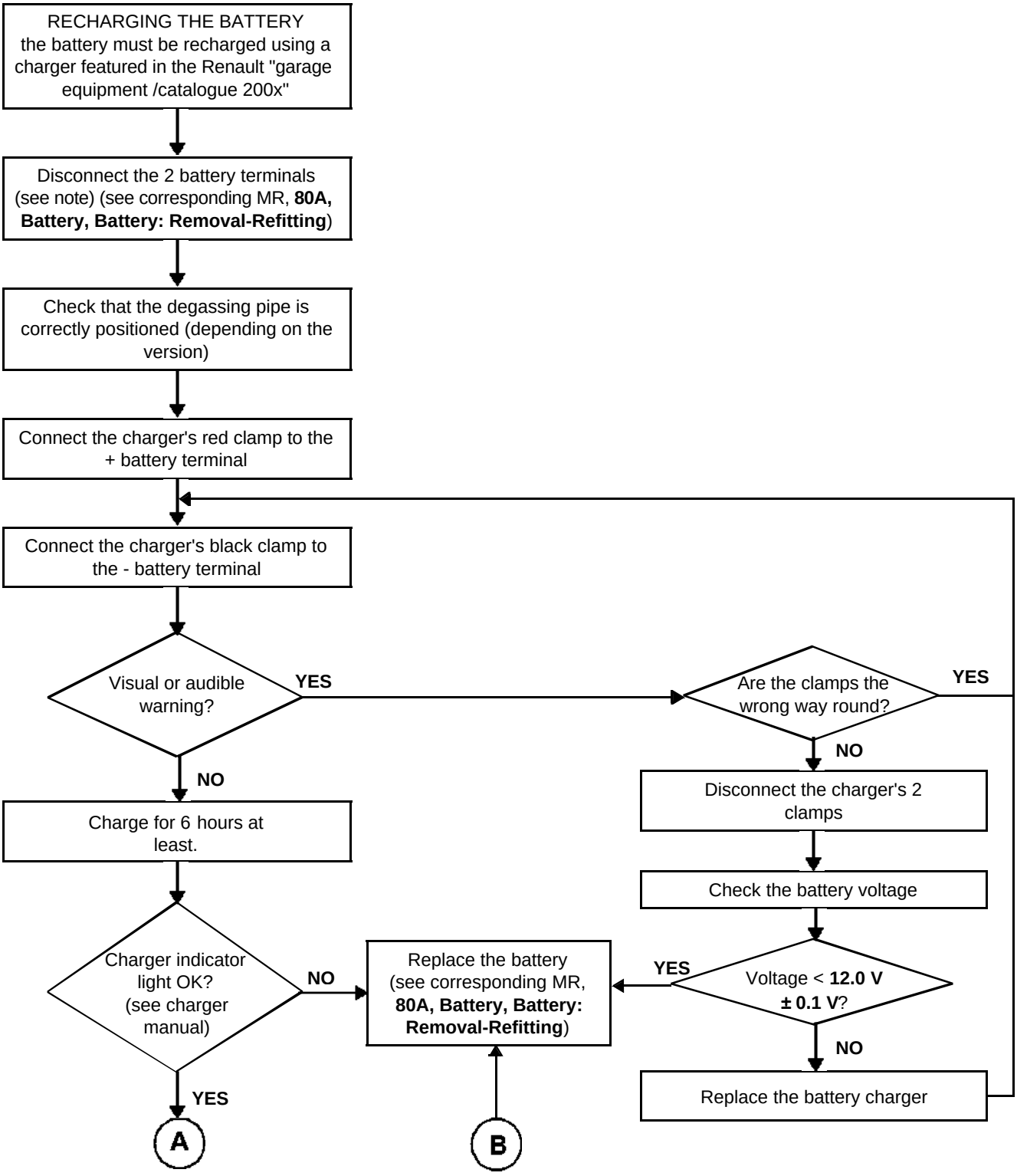
RECHARGING THE BATTERY
the battery must be recharged using a charger featured in the Renault "garage equipment /catalogue 200x"
Disconnect the 2 battery terminals (see note) (see corresponding MR, 80A, Battery, Battery: Removal-Refitting)
Check that the degassing pipe is correctly positioned (depending on the version)
Connect the charger's red clamp to the + battery terminal
Connect the charger's black clamp to the - battery terminal
Visual or audible warning?
YES
NO
Are the clamps the wrong way round?
YES
NO
Disconnect the charger's 2 clamps
Check the battery voltage
Voltage < 12.0 V ± 0.1 V?
YES
NO
Replace the battery charger
Charge for 6 hours at least.
Charger indicator light OK? (see charger manual)
NO
YES
Replace the battery (see corresponding MR, 80A, Battery, Battery: Removal-Refitting)
A
B

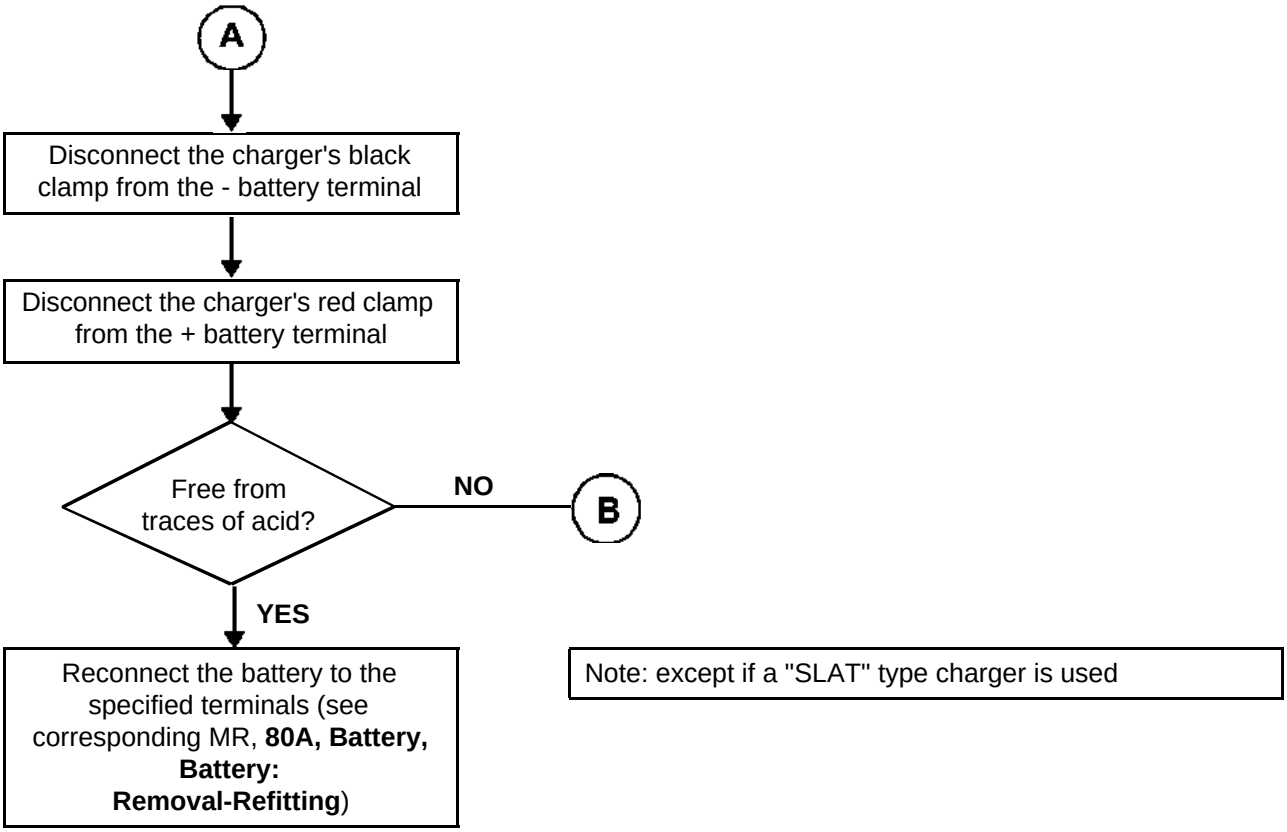
A
Disconnect the charger's black clamp from the - battery terminal
Disconnect the charger's red clamp from the + battery terminal
Free from traces of acid?
NO
B
YES
Reconnect the battery to the specified terminals (see corresponding MR, 80A, Battery, Battery: Removal-Refitting)
Note: except if a "SLAT" type charger is used

CLAIM COMPLETION AND CODING

– Operation time:

Additional battery recharge
- Operation code: 8210
- Allocated time: 0.3 hours

Battery replacement
- Operation code: 8207
- Time allowed: See Operation time.

– Part to be indicated: part number of faulty battery (if replaced).
Or indicate OT code concerned: battery recharge (if recharged).

BRAKE COMPENSATOR: REMOVAL - REFITTING

Note, one or more warnings are present in this procedure

WARNING

- To avoid all risk of damage to the systems, apply the safety and cleanliness instructions and operation recommendations before carrying out any repair:
  - Brake circuit: Precautions for the repair ,
  - Vehicle: Precautions for the repair .

Location and specifications (tightening torques, parts always to be replaced, etc.)(see 37A, Mechanical component controls, Braking control assembly: Exploded view) .

REMOVAL

1. REMOVAL PREPARATION OPERATION

- Remove the front bumper upper strip Exterior body front trim assembly: Exploded view .
- Remove the A-pillar trims Exterior body side trim assembly: Exploded view .
- Remove Exterior body front trim assembly: Exploded view :
  - the front bumper lower trim,
  - the front bumper trim.
- Remove Exterior body side trim assembly: Exploded view :

- the right-hand B-pillar trim,
- the right-hand body side trim,
- the right-hand roof front section trim,
- the right-hand windscreen side window,
- the right-hand sill panel extension,
- the front right-hand wheel arch liner.

2. REMOVAL OPERATION

❑

Loosen the rear rigid brake pipe nuts on the brake compensator(see 37A, Mechanical component controls, Braking control assembly: Exploded view) .

CAUTION

Prepare for the flow of fluid, and protect the surrounding components.

❑

Fit blanking plugs.

❑

Remove the brake compensator(see 37A, Mechanical component controls, Braking control assembly: Exploded view) .

REFITTING

1. REFITTING OPERATION

❑

Proceed in the reverse order to removal.

2. FINAL OPERATION

- Fill and bleed the brake circuit**Braking circuit: Bleed** .

Repair-13x03x08x01-01x37-1-12-1.xml

XSL version : 3.02 du 22/07/11

BRAKEFLUID:SPECIFICATIONS

1. BRAKE FLUID REPLACEMENT INTERVAL

Our braking technology, and in particular the disc brakes (hollow pistons which conduct little heat, have a low volume of fluid in the cylinder, sliding callipers avoiding the need for a fluid reserve in the least cooled area of the wheel), has allowed us to prevent the risk of "vapour lock" as far as possible, even with heavy braking (mountainous area). However, current brake fluids are subject to minor deterioration during the first months of use due to slight humidity intake. This is why it is recommended that you change the brake fluid: see maintenance booklet for the vehicle.

1- TOPPING UP THE LEVEL

Wear of the brake pads will result in a gradual drop in the fluid level in the reservoir.

Do not top up the fluid, as the level will rise again when the pads are next changed. The brake fluid level must not fall below the minimum mark.

2- APPROVED BRAKE FLUID

Using a mixture of two incompatible brake fluids in the brake circuit may give rise to:

- significant risk of leaks mainly due deterioration of the cups,
- impaired operation of the ESP system.

To avoid such risks, it is essential to only use RENAULT standard approved brake fluidsVehicle: Parts and consumables for the repair .

BRAKE MECHANISM: PRECAUTIONS FOR THE REPAIR

Note, one or more warnings are present in this procedure

1. SAFETY

1- ADVICE TO BE FOLLOWED BEFORE ANY OPERATION

For an operation requiring the use of a lift, follow the safety advice Vehicle: Towing and lifting (02A, Lifting equipment).

2- INSTRUCTIONS TO BE FOLLOWED DURING THE OPERATION

- Using a mixture of two incompatible brake fluids in the brake circuit may give rise to:
  - serious risk of leakage due mainly to deterioration of the cups,
  - degradation of the ESP system.

To avoid such risks, only ever use brake fluids which comply with the RENAULT standard Vehicle: Parts and consumables for the repair (04B, Consumables - Products).

CAUTION

Switch off the vehicle ignition so as not to activate the hydraulic unit solenoid valves when bleeding the brake circuit.

- Reminder:
  - The pipes between the master cylinder, the callipers, and the hydraulic unit are connected using threaded unions with a metric thread.
  - Therefore, only parts specified in the Parts Catalogue for this vehicle should be used.

WARNING

To ensure that the ABS and ESP systems operate correctly, check that the underbody brake pipes are clipped in place and are not crossed.

WARNING

To avoid any accident, bring the pistons, brake pads and brake discs into contact by depressing the brake pad several times.

If, during work on the brake system, any damage on any part is observed, it must be repaired before driving the vehicle again.

2. CLEANLINESS

1- ADVICE TO BE FOLLOWED BEFORE ANY OPERATION

Protect any bodywork components that risk being damaged by brake fluid with a cover.

2- INSTRUCTIONS TO BE FOLLOWED DURING THE OPERATION

To avoid contaminating the brake circuit, do not allow the brake circuit components to drop on the ground.

Clean around the braking system with brake cleanerVehicle: Parts and consumables for the repair (04B, Consumables - Products).

CAUTION

Prepare for the flow of fluid, and protect the surrounding components.

3. GENERAL RECOMMENDATIONS

1- MASTER CYLINDER - BRAKE SERVO

Always replace the master cylinder seals.

Check that the brake servo seal is in place. Replace the seal if it is damaged.

Always replace the master cylinder - brake servo assembly when the master cylinder leaks into the brake servo. The brake servo becomes unusable when the rubber diaphragm is contaminated with brake fluid.

WARNING

To avoid breaking the connection between the brake servo pushrod and the brake pedal, check that the safety clevis pin is locked onto the brake servo pushrod by tilting it from the top downwards.

2- BRAKE HOSE

CAUTION

In order not to damage the brake hose:

- do not tension the hose,
- do not twist the hose,
- check that there is no contact with the surrounding components.

BRAKE PEDAL SWITCH: REMOVAL - REFITTING

REMOVAL

1. REMOVAL PREPARATION OPERATION

- Position the vehicle on a two-post lift Vehicle: Towing and lifting .
- Remove the front wheel Wheel: Removal - Refitting .
- Remove Exterior front side opening element assembly: Exploded view :
  - the front right-hand side door mirror,
  - the front left-hand side door mirror.
- Remove the A-pillar trims Exterior body side trim assembly: Exploded view .
- Remove Exterior body front trim assembly: Exploded view :
  - the front bumper,
  - the front end panel.

2. REMOVAL OPERATION

- Disconnect the brake pedal switch connector (see 37A, Mechanical component controls, Pedal assembly: Exploded view) .
- Remove the brake pedal switch (see 37A, Mechanical component controls, Pedal assembly: Exploded view) .

REFITTING

1. REFITTIING OPERATION

- Proceed in the reverse order to removal.

2. FINAL OPERATION

- Switch on the ignition.
- Check that the brake light switch is operating correctly:
  - depress the brake pedal to switch on the brake lights,
  - release the brake pedal to switch off the brake lights.
- Switch off the ignition.

BRAKE PEDAL SWITCH: REMOVAL - REFITTING

REMOVAL

1. REMOVAL PREPARATION OPERATION

- Position the vehicle on a two-post lift Vehicle: Towing and lifting .
- Remove the front wheel Wheel: Removal - Refitting .
- Remove Exterior front side opening element assembly: Exploded view :
  - the front right-hand side door mirror,
  - the front left-hand side door mirror.
- Remove the A-pillar trims Exterior body side trim assembly: Exploded view .
- Remove Exterior body front trim assembly: Exploded view :
  - the front bumper,
  - the front end panel.

2. REMOVAL OPERATION

- Disconnect the brake pedal switch connector (see 37A, Mechanical component controls, Pedal assembly: Exploded view) .
- Remove the brake pedal switch (see 37A, Mechanical component controls, Pedal assembly: Exploded view) .

REFITTING

1. REFITTIING OPERATION

- Proceed in the reverse order to removal.

2. FINAL OPERATION

- Switch on the ignition.
- Check that the brake light switch is operating correctly:
  - depress the brake pedal to switch on the brake lights,
  - release the brake pedal to switch off the brake lights.

❑ Switch off the ignition.

BRAKE SPECIFICATIONS

Front disc brake (mm)	
Piston diameter	32
Disc diameter	214
Disc thickness	4.5
Minimum disc thickness (1)	3.5
Maximum disc run-out	0.05
Brake lining thickness (without backplate)	5.6
Rear disc brake (mm)	3.5
Minimum brake pad thickness (without backplate)	1.4
Rear disc brake (mm)	
Piston diameter	30
Disc diameter	204
Disc thickness	4.5
Minimum disc thickness (1)	3.5
Maximum disc run-out	0.05
Brake lining thickness (without backplate)	4.2

Minimum brake pad thickness (without backplate)	1.1

(1) the brake discs cannot be repaired. The brake discs must be replaced if they are excessively scratched or worn.

Master cylinder piston diameter (mm)	15.875

BRAKING CIRCUIT: BLEED

Note, one or more warnings are present in this procedure

Equipment required
brake circuit bleeding device
pedal press

WARNING

To avoid all risk of damage to the systems, apply the safety and cleanliness instructions and operation recommendations before carrying out any repair **(see 30A, General information, Brake circuit: Precautions for the repair)** .

CAUTION

To avoid residual air being present in the brake circuit, the parking brake must be released before starting the bleeding process.

This procedure must be applied after one of the following components has been removed or replaced:

- the master cylinder,
- the brake fluid,
- the hydraulic unit,
- a rigid pipe,
- a hose,
- the reservoir,

■

a calliper.

CAUTION

Switch off the vehicle ignition so as not to activate the hydraulic unit solenoid valves when bleeding the brake circuit.

CAUTION

The level must be between the "MIN" and "MAX" markings on the reservoir.

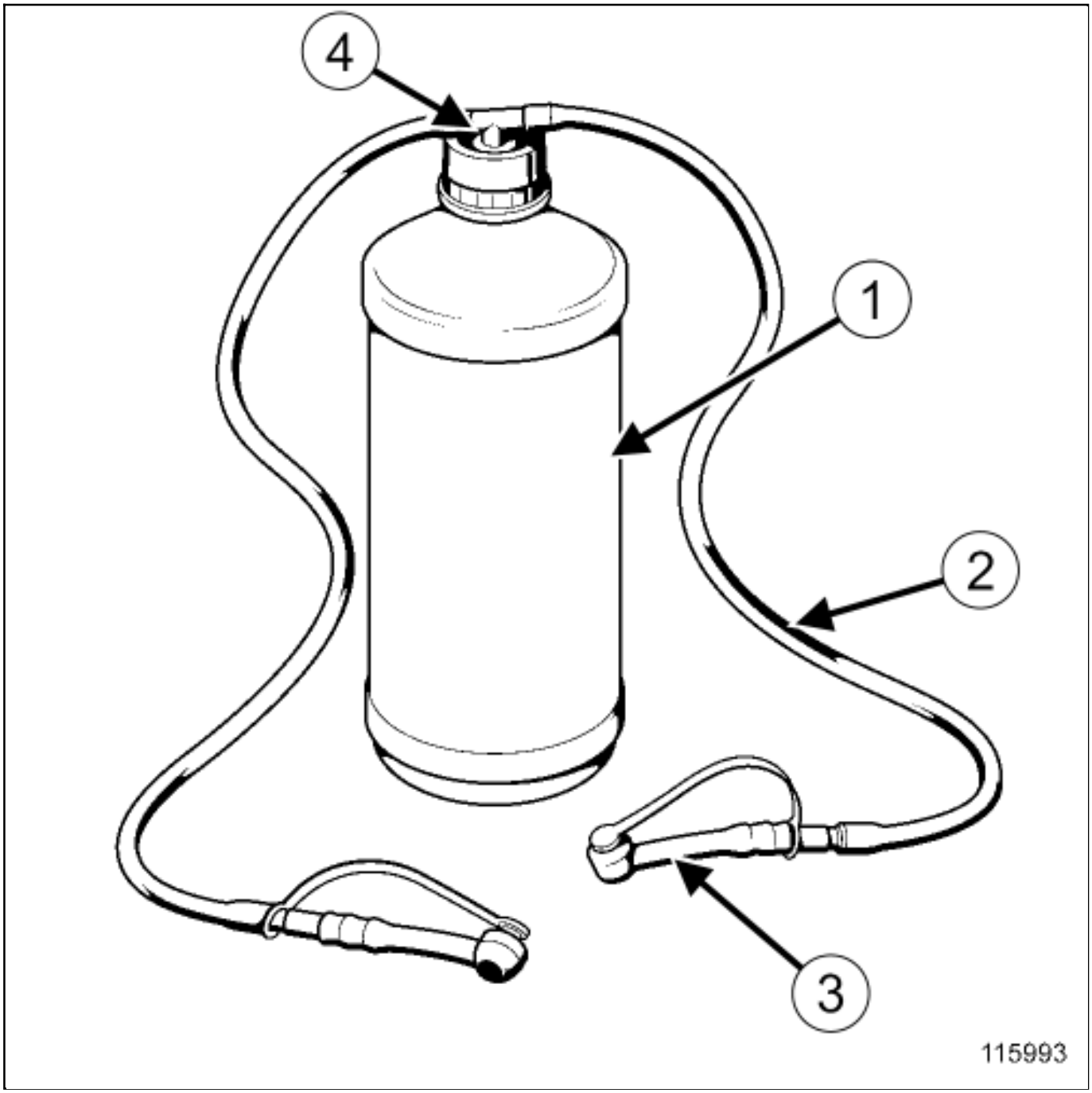

Use locally produced containers to collect the used brake fluid.

Front and rear callipers:

- 2 washer fluid containers(1) (1 litre),
- 4 mmdiameter transparent pipes(2) ,

- 4 pipettes(3) ,
- 2 T-unions(4) .

Note:

The new hydraulic unit is pre-filled.

- When working on one of the following components, position a pedal pressto limit the outflow of brake fluid and prevent any air from entering the master cylinder and the circuits downstream of the master cylinder:
  - hydraulic unit,
  - pipes between the hydraulic unit and brake callipers,
  - brake hoses,
  - brake calliper.

Remove the pedal pressbefore carrying out the braking system bleeding procedure.

- Position the vehicle on a two-post liftVehicle: Towing and lifting .
- Switch off the vehicle ignition.
- Connect the brake circuit bleeding device(after having received Renault approval) to the master cylinder reservoir (see the instructions for the equipment).
- Pressurise the brake circuit.
- Adjust the pressure to between 1.5 bar< P < 2 barfor 3 minutesto stabilise it in the braking circuit.

Close the circuit between the bleed screw and brake fluid reservoir without dumping the pressure.

Note:

The circuit between the bleed screw and brake fluid reservoir is closed in different ways depending on the type of equipment used:

- valve,
- switch.

Fit the bleed containers to the six bleed screws of the callipers.

Note:

Some callipers are equipped with several bleed screws. In this case, turn the bolts one after another to perform the brake circuit bleed.

Undo the calliper bleed screws:

- front left-hand,
- front right-hand,
- rear left-hand,
- rear right-hand.

Open the circuit between the bleed screw and brake fluid reservoir and allow the liquid to run until all the air bubbles have been released.

Tighten the bleed screws in the following order:

- front left-hand,
- front right-hand,
- rear left-hand,
- rear right-hand.

Undo the calliper bleed screw:

- front left-hand,
- allow the fluid to run until all the air bubbles have been released,
- tighten the bleed screw on the calliper.

Carry out the previous operation on the callipers:

- front right-hand,
- rear left-hand,
- rear right-hand.

Close the bleed screw to dump the pressure in the brake circuit.

Remove the brake circuit bleeding deviceFrom the master cylinder reservoir.

Check pedal travel and resistance. If it is not correct, finish bleeding the brake circuit with the help of a second operator. Start the bleed operation by bleeding the calliper that is the furthest away from the master cylinder:

- hold down the brake pedal,

- open the circuit bleed screw to release the air from the brake circuit,
- close the circuit bleed screw,
- release the brake pedal.

❑

Top up the brake fluid level in the reservoir, if necessary. Check the sealing of the front and rear bleed screws and ensure that the sealing covers are in place**Front brake calliper assembly: Exploded view** .

❑

During a road test, trigger braking regulation to confirm that the brake pedal travel is correct.

❑

Clean off any traces of brake fluid on the vehicle using brake cleaning product**Vehicle: Parts and consumables for the repair** .

1. BLEEDING THE BRAKING ASSISTANCE CIRCUIT

Repair-13x03x01-01x76-1-29-1.xml

XSL version : 3.02 du 22/07/11

BRAKING CONTROL ASSEMBLY: EXPLODED VIEW

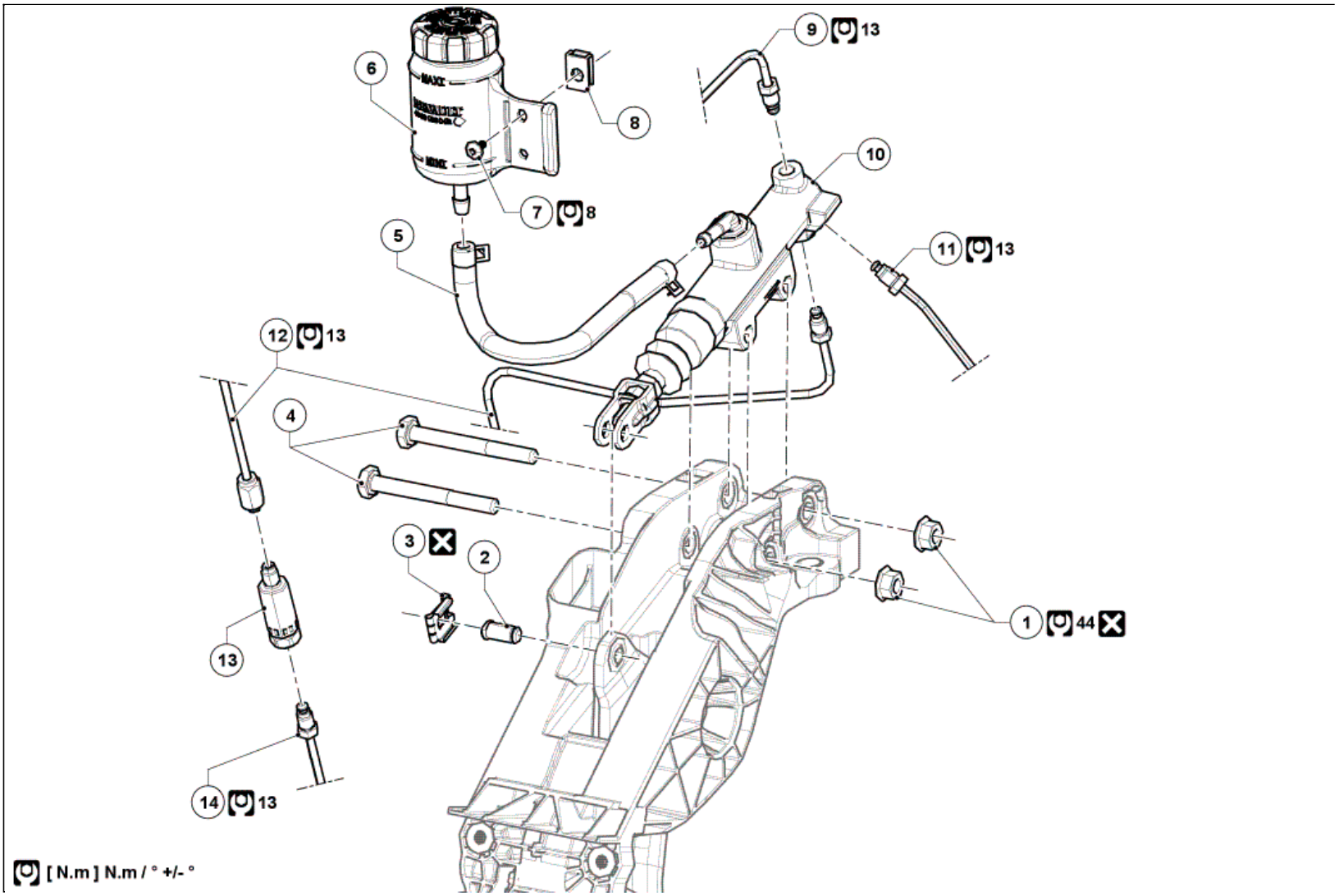

Illustration key: Description .

Marks	Designations	Informations
1	Master cylinder nuts	
2	Master cylinder pin	
3	Master cylinder pin clamp	
4	Master cylinder bolts	
5	Hose between brake fluid reservoir and master cylinder	
6	Brake fluid reservoir	
7	Brake fluid reservoir screw	
8	Brake fluid reservoir clamp	
9	Front right-hand rigid brake pipe	(see 37A, Mechanical component controls, Master cylinder - front right-hand calliper brake pipe: Removal - Refitting)
10	Master cylinder	(see 37A, Mechanical component controls, Master cylinder: Removal - Refitting)
11	Front left-hand rigid brake pipe	(see 37A, Mechanical component controls, Master cylinder - front left-hand calliper brake pipe: Removal - Refitting)
12	Rear rigid brake pipe at master cylinder outlet	(see 37A, Mechanical component controls, Master cylinder - underbody union brake pipe: Removal - Refitting)
13	Brake compensator	(see 37A, Mechanical component controls, Brake compensator: Removal - Refitting)
14	Rear rigid brake pipe at brake compensator outlet	Rigid brake pipe: Removal - Refitting

C-PILLAR REPLACEMENT

Note, one or more warnings are present in this procedure

1. COMPOSITION OF THE SPARE PART

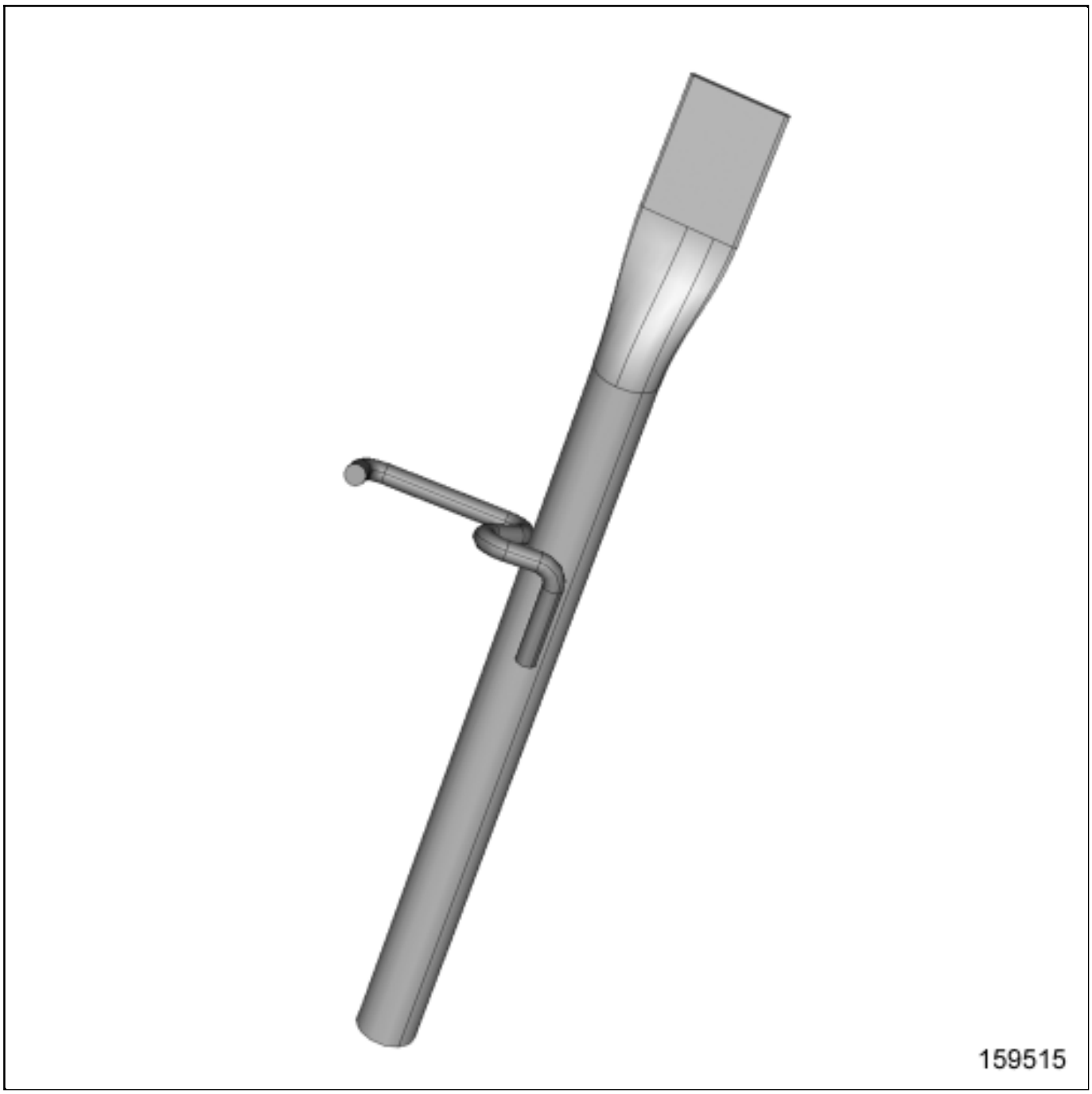

No.	Description	Type	Thickness (mm)
	C-pillar	TSE	1.5

2. IN THE EVENT OF REPLACEMENT

The options for replacing this part is as follows:

Complete replacement

CAUTION

To avoid damaging the vehicles electric and electronic components, the earths of any wiring harness near the weld area must be disconnected.

Position the earth of the welding machine as close as possible to the weld area(see **Bolted connection for earth: Fitting**) (MR 400, 40H, Bolted connections).

Locate the earths located near to the weld areaEarths on body: List and location of components .

1- COMPLETE REPLACEMENT

1)PART IN POSITION

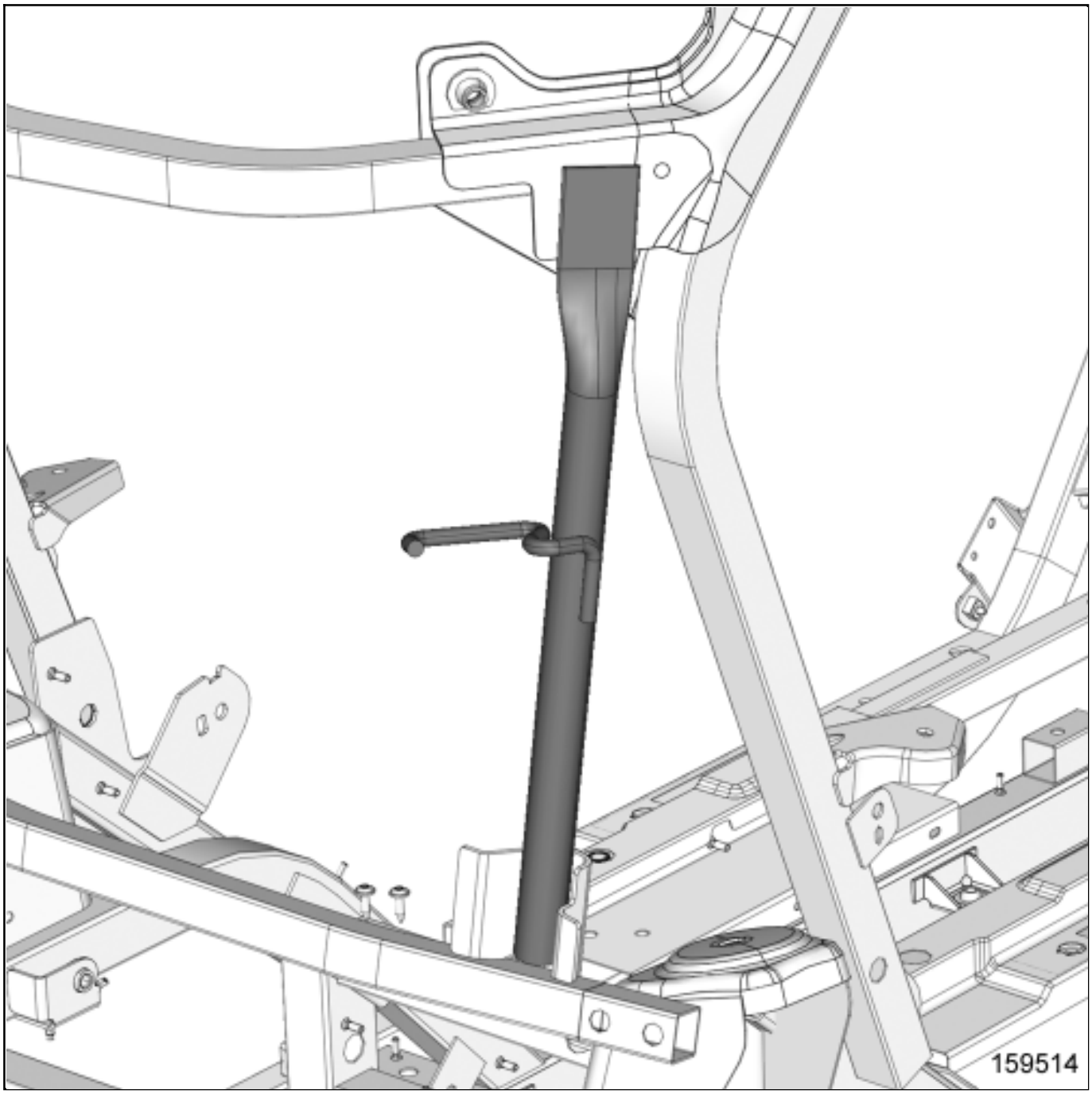

2)SPECIAL NOTES ON MATING

CAUTION

If the mating faces of the parts to be welded are not accessible, use a GMAW plug weld in place of the original electrical resistance weld**Connections by arc welding under shielding gas: Description** (MR 400, 40C, Gas metal arc welded connections (GMAW)).

XSL version : 3.02 du 22/07/11

DASHBOARD:REMOVAL-REFITTING

Note, one or more warnings are present in this procedure

Equipment required
Diagnostic tool

WARNING

To avoid all risk of damage to the systems, apply the safety and cleanliness instructions and operation recommendations before carrying out any repair:

- Airbag and pretensioners: Precautions for the repair ,
- Vehicle: Precautions for the repair .

Location and specifications (tightening torques, parts always to be replaced, etc.)(see 57A, Interior equipment, Dashboard assembly: Exploded view) .

REMOVAL

1. REMOVAL PREPARATION OPERATION

WARNING

To avoid any risk of triggering when working on or near a pyrotechnic component (airbags or pretensioners), lock the airbag computer using the diagnostic tool.

When this function is activated, all the trigger lines are inhibited and the airbag warning light on the instrument panel lights up continuously (ignition on).

Lock the airbag computer using the Diagnostic tool(see Fault finding - Replacement of components) (88C,

Airbags and pretensioners).

WARNING

DANGER : Risk of serious injuries due to the short-circuiting or the untimely triggering of an electrical system (pyrotechnical parts, windscreen wiper motor, electric fan, etc.) following possible loopback of the 12-volt supply circuit by the voltage transformer.

Please adhere to the instructions regarding cut-off of the 12-volt supply circuit.

If the procedure fails, do not continue with your task and ask an employee who is qualified and authorized to work on a high-voltage onboard network to perform a diagnostic Vehicle: Precautions for the repair .

- Disconnect the 12V supply circuit12 V supply circuit : Lockout - Removal of lockout .

- Position the handbrake on the third notching.

- Remove the front bumper upper stripExterior body front trim assembly: Exploded view .

- Remove Exterior body side trim assembly: Exploded view :
  - the A-pillar trims,
  - the B-pillar trims,
  - the roof front section trims,
  - the winscreen side windows.

- Remove:
  - the driver's front airbagDriver's frontal airbag: Removal - Refitting ,

- the steering wheel Steering assembly: Exploded view ,
- the steering wheel cover (see 57A, Interior equipment, Dashboard assembly: Exploded view) ,
- the rotary switch assembly (see 57A, Interior equipment, Dashboard assembly: Exploded view) ,
- the fuses flap (see 57A, Interior equipment, Dashboard assembly: Exploded view) ,
- the instrument panel front trim (see 57A, Interior equipment, Dashboard assembly: Exploded view) ,
- the intrument panel (see 57A, Interior equipment, Dashboard assembly: Exploded view) .

Remove (see 57A, Interior equipment, Dashboard assembly: Exploded view) :

- the left-hand glovebox,
- the right-hand glovebox,
- the left-hand dashboard trim,
- the right-hand dashboard trim,
- the left-hand dashboard side panel,
- the right-hand dashboard side panel.

2. REMOVAL OPERATION

Remove (see 57A, Interior equipment, Dashboard assembly: Exploded view) :

- the dashboard screws,
- the dashboard.

Note:

Mark the position of the various wiring before removing the dashboard.

REFITTING

1. REFITTING OPERATION

CAUTION

To prevent damage to the wiring harness when refitting, observe the original routing.

CAUTION

To guarantee a good electrical connection, make sure that the wiring does not place any stress on the connectors or the surrounding components.

- Proceed in the reverse order to removal.

2. FINAL OPERATION

- Connect the 12V supply circuit12 V supply circuit : Lockout - Removal of lockout .
- Unlock the airbag computer using the Diagnostic toolAirbag and pretensioners: Precautions for the repair .
- Carry out a function test on all functions.

DIFFERENTIAL OUTPUT SEAL : REMOVAL - REFITTING

Note, one or more warnings are present in this procedure

Special tooling required	
differential output seal fitting tool	Bvi. 2014

Equipment required
roll pin punch

parts always to be replaced:
Differential output seal

WARNING

- To avoid all risk of damage to the systems, apply the safety and cleanliness instructions and operation recommendations before carrying out any repair:
  - Vehicle: Precautions for the repair .

Location and specification (tightening torques, parts always to be replaced, etc.)(see 23C, Reduction gear, Electric traction reduction gearing assembly: Exploded view) .

REMOVAL

1. REMOVAL PREPARATION OPERATION

- Position the vehicle on a two-post lift Vehicle: Towing and lifting .

WARNING

DANGER: HIGH VOLTAGE VEHICLE.

Risks of serious burns or electric shock that may prove fatal.

Before carrying out any work on the vehicle, it is essential that you adhere to the instructions regarding vehicle voltage cut-off. This work must be carried out by an employee who is qualified and authorized to work on a high-voltage onboard network Vehicle: Precautions for the repair .

- Remove the lockout of the vehicle Vehicle: Lockout - Removal of lockout .

- Remove:
  - the rear wheels Wheel: Removal - Refitting ,
  - the rear driveshaft Driveshaft assembly: Exploded view .

2. REMOVAL OPERATION

REMOVING THE RIGHT-HAND SIDE DIFFERENTIAL OUTPUT SEAL

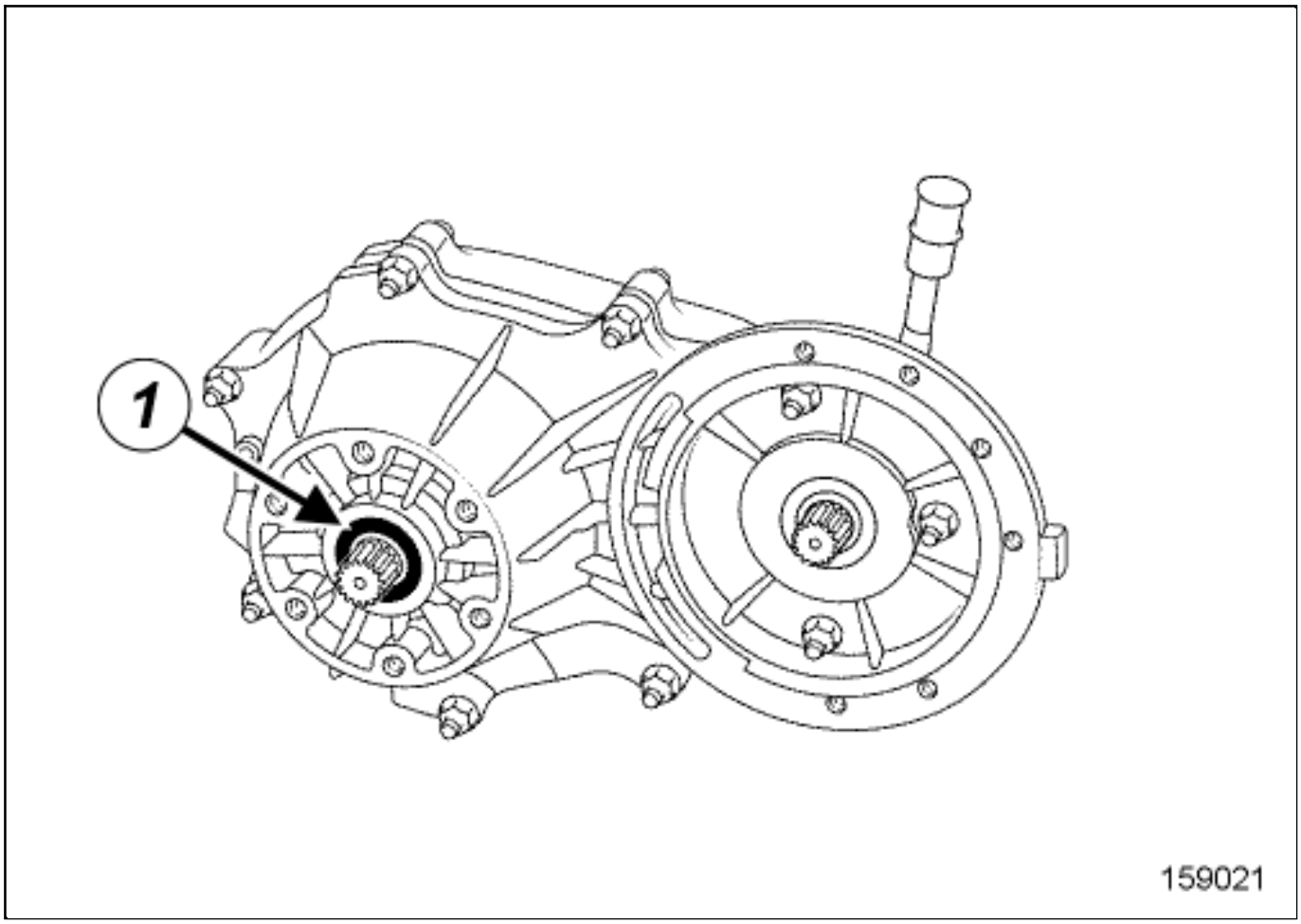

REMOVING THE LEFT-HAND SIDE DIFFERENTIAL OUTPUT SEAL

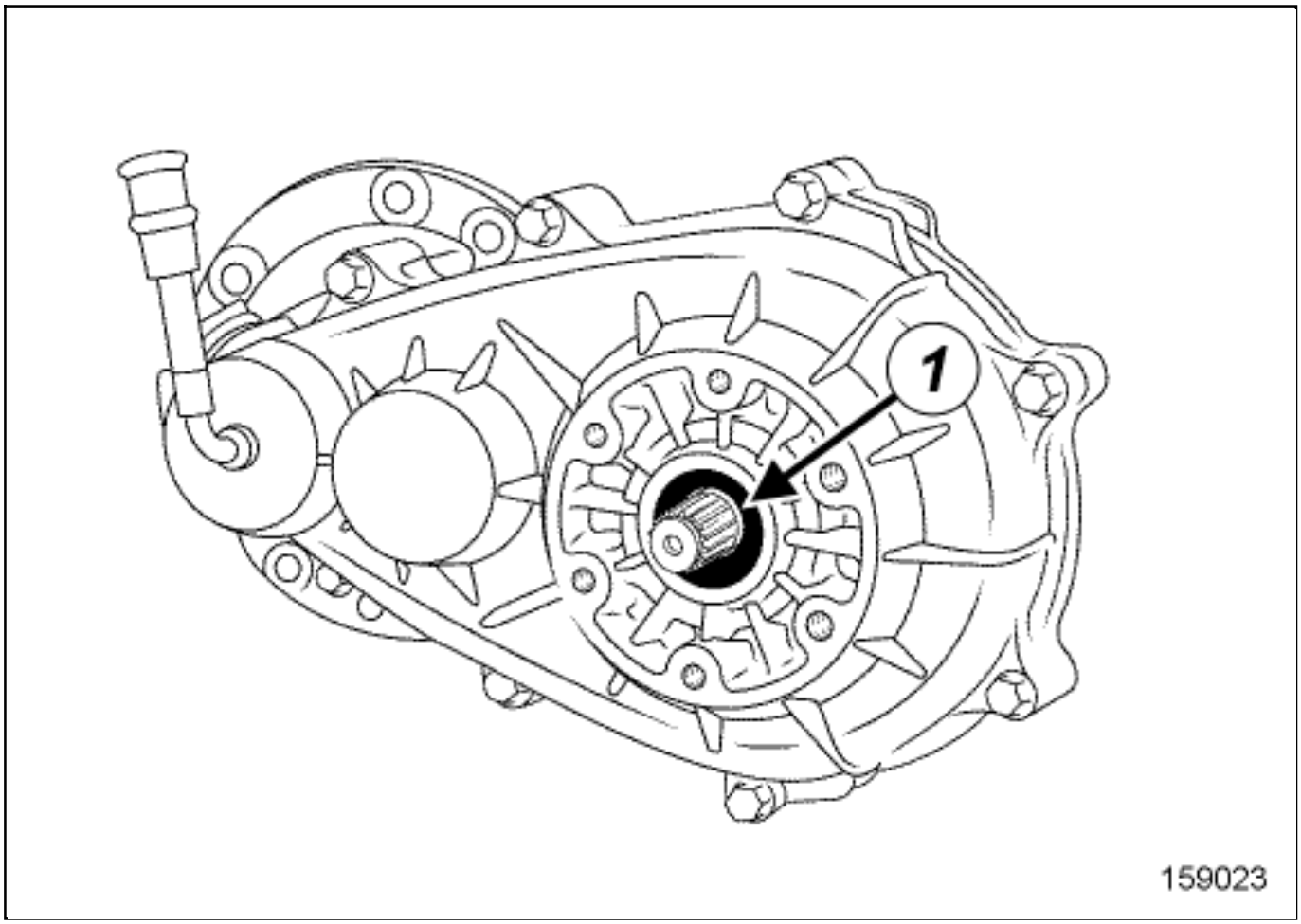

- Tap the base of the differential output seal(1) using a roll pin punchand a small hammer to detach it and rotate it in its housing.

- Remove the differential output seal(1) with a screwdriver, taking care not to damage the differential housing.

REFITTING

1. REFITTING PREPARATION OPERATION

-

parts always to be replaced: Differential output seal .

2. REFITTING OPERATION

REFITTING THE RIGHT-HAND SIDE DIFFERENTIAL OUTPUT SEAL

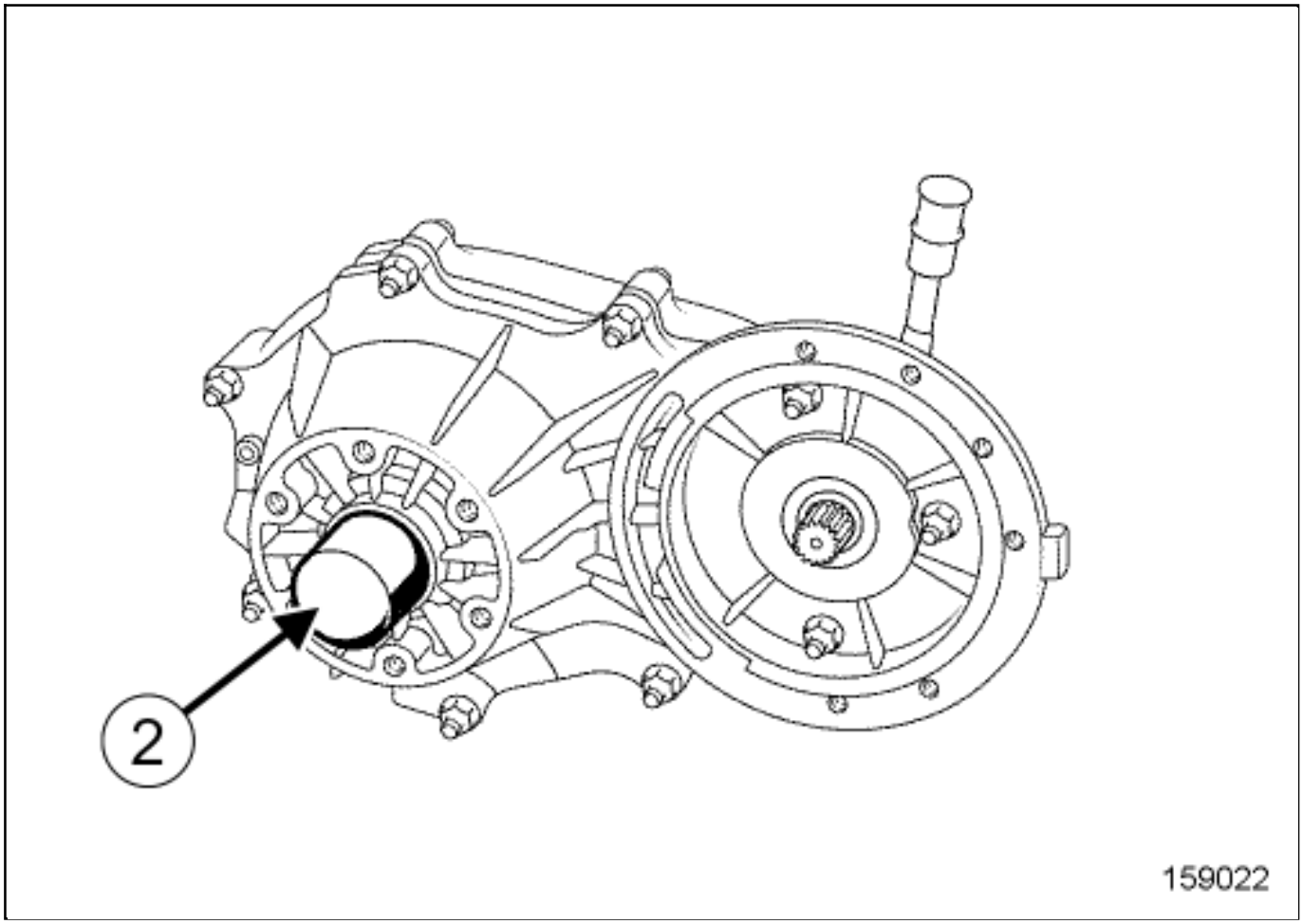

REFITTING THE LEFT-HAND SIDE DIFFERENTIAL OUTPUT SEAL

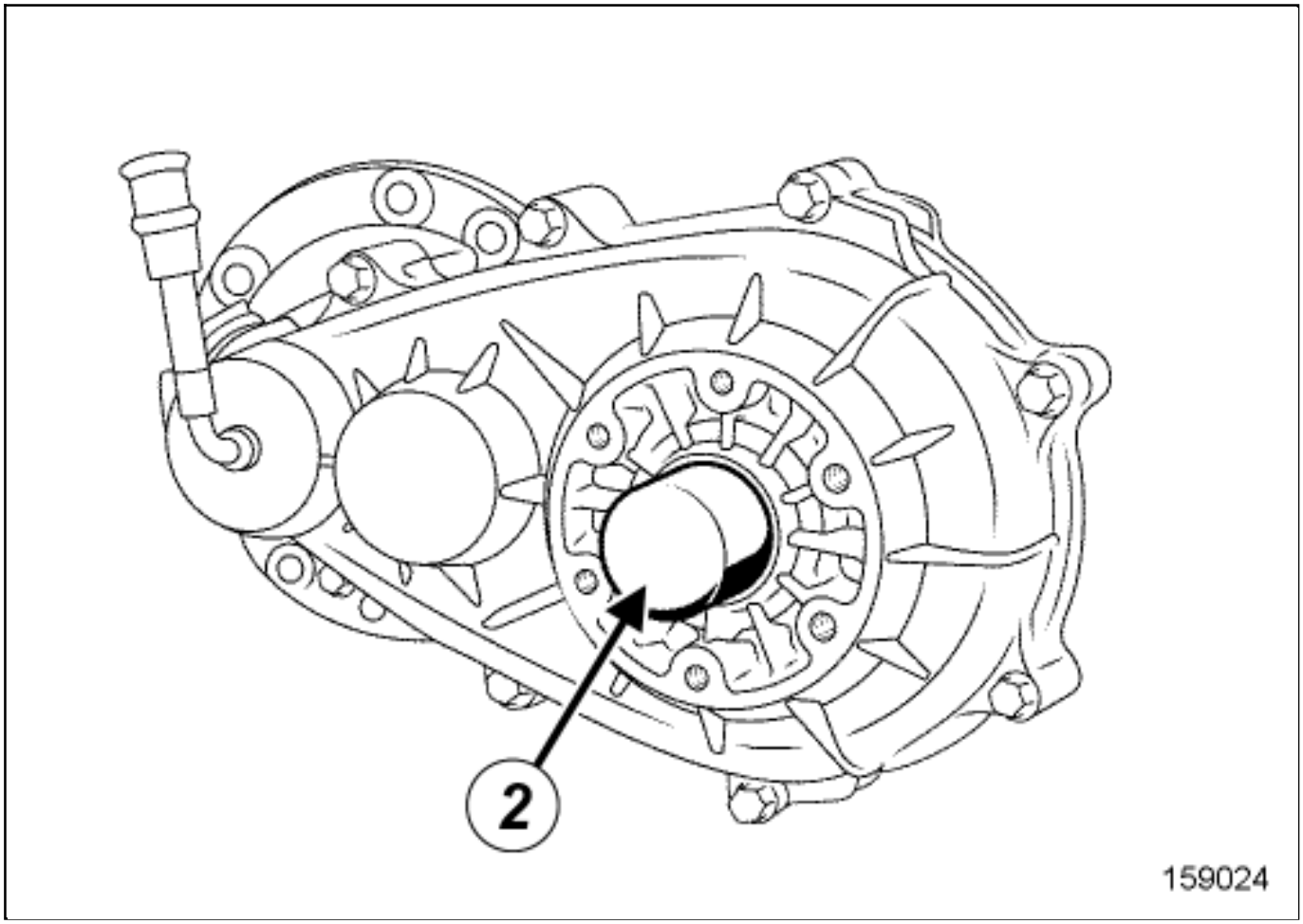

- Lubricate the internal surface of the new differential output seal.
- Fit the new differential output seal on the tooldifferential output seal fitting tool(Bvi. 2014) (2) .
- Tap the tooldifferential output seal fitting tool(Bvi. 2014) with a copper hammer to fit the new differential output seal fully.

3. FINAL OPERATION

- Proceed in the reverse order to removal.

DOOR MIRROR: REMOVAL - REFITTING

Note, one or more warnings are present in this procedure

WARNING

To avoid all risk of damage to the systems, apply the safety and cleanliness instructions and operation recommendations before carrying out any repair:

Vehicle: Precautions for the repair .

Location and specifications (tightening torques, parts always to be replaced, etc.)Exterior front side opening element assembly: Exploded view .

REMOVAL

1. REMOVAL OPERATION

Remove Exterior front side opening element assembly: Exploded view :

- the door mirror trim,
- the door mirror bolts,
- the door mirror.

REFITTING

Proceed in the reverse order to removal.

Repair-50x07x08x02-01x37-1-26-1.xml

XSL version : 3.02 du 22/07/11

DRIVER'S FRONTAL AIRBAG: REMOVAL - REFITTING

Note, one or more warnings are present in this procedure

Equipment required
Diagnostic tool

WARNING

Before carrying out any operation on a vehicle fitted with the Stop & Start system, always follow the safety instructions**Vehicle: Precautions for the repair**

WARNING

To avoid all risk of damage to the systems, apply the safety and cleanliness instructions and operation recommendations before carrying out any repair:

(see 88C, Airbags and pretensioners, Airbag and pretensioners: Precautions for the repair) ,

Vehicle: Precautions for the repair .

REMOVAL

1. REMOVAL PREPARATION OPERATION

Apply the procedure for deactivating the safety systems(see 88C, Airbags and pretensioners, Airbag and pretensioners: Precautions for the repair) .

WARNING

DANGER : Risk of serious injuries due to the short-circuiting or the untimely triggering of an electrical system (pyrotechnical parts, windscreen wiper motor, electric fan, etc.) following possible loopback of the 12-volt supply circuit by the voltage transformer.

Please adhere to the instructions regarding cut-off of the 12-volt supply circuit.

If the procedure fails, do not continue with your task and ask an employee who is qualified and authorized to work on a high-voltage onboard network to perform a diagnostic Vehicle: Precautions for the repair .

- Lockout the 12V supply circuit 12 V supply circuit : Lockout - Removal of lockout .

- Turn the steering wheel one half-turn.

2. OPERATION FOR REMOVAL OF PART CONCERNED

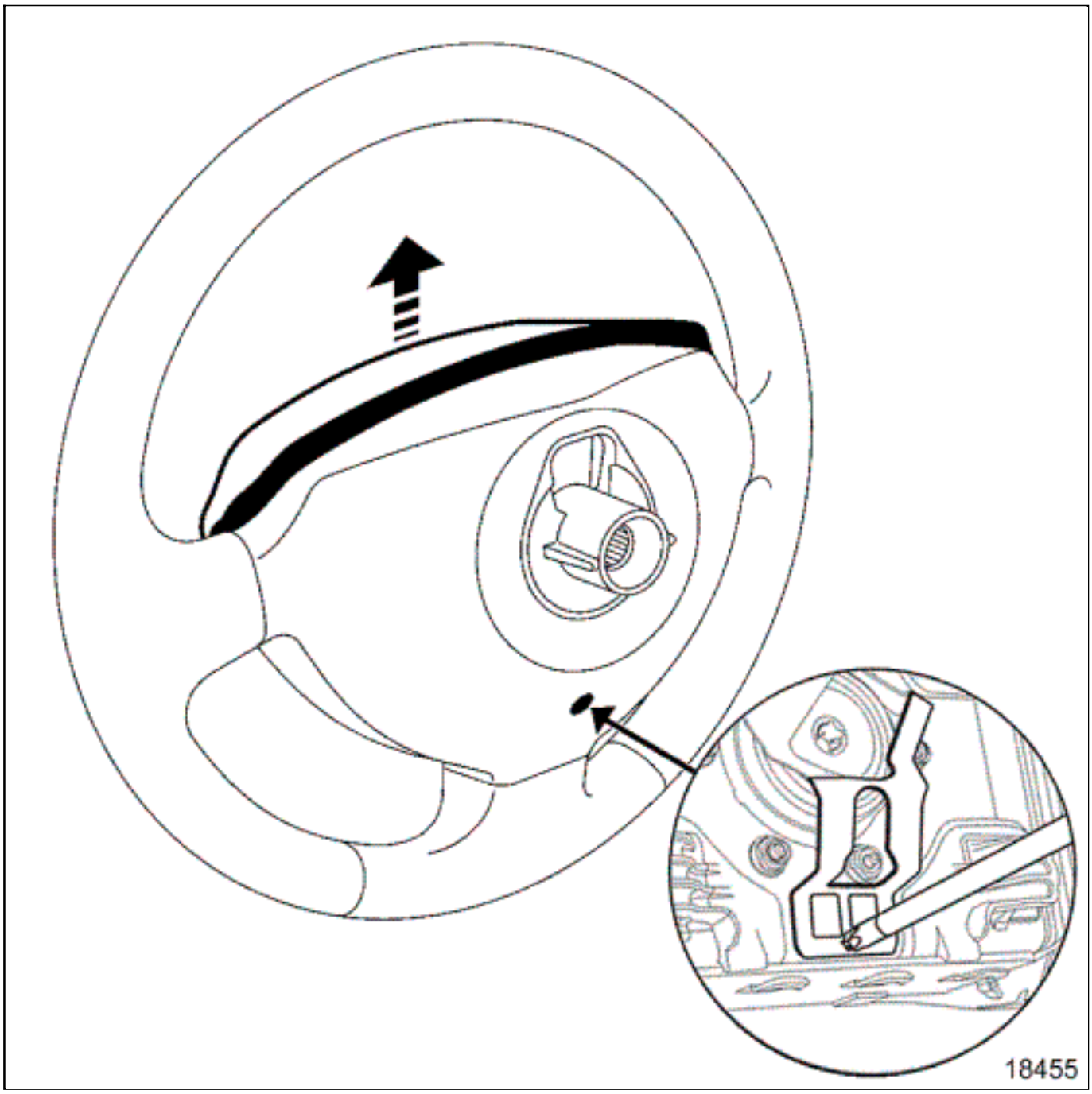
18455

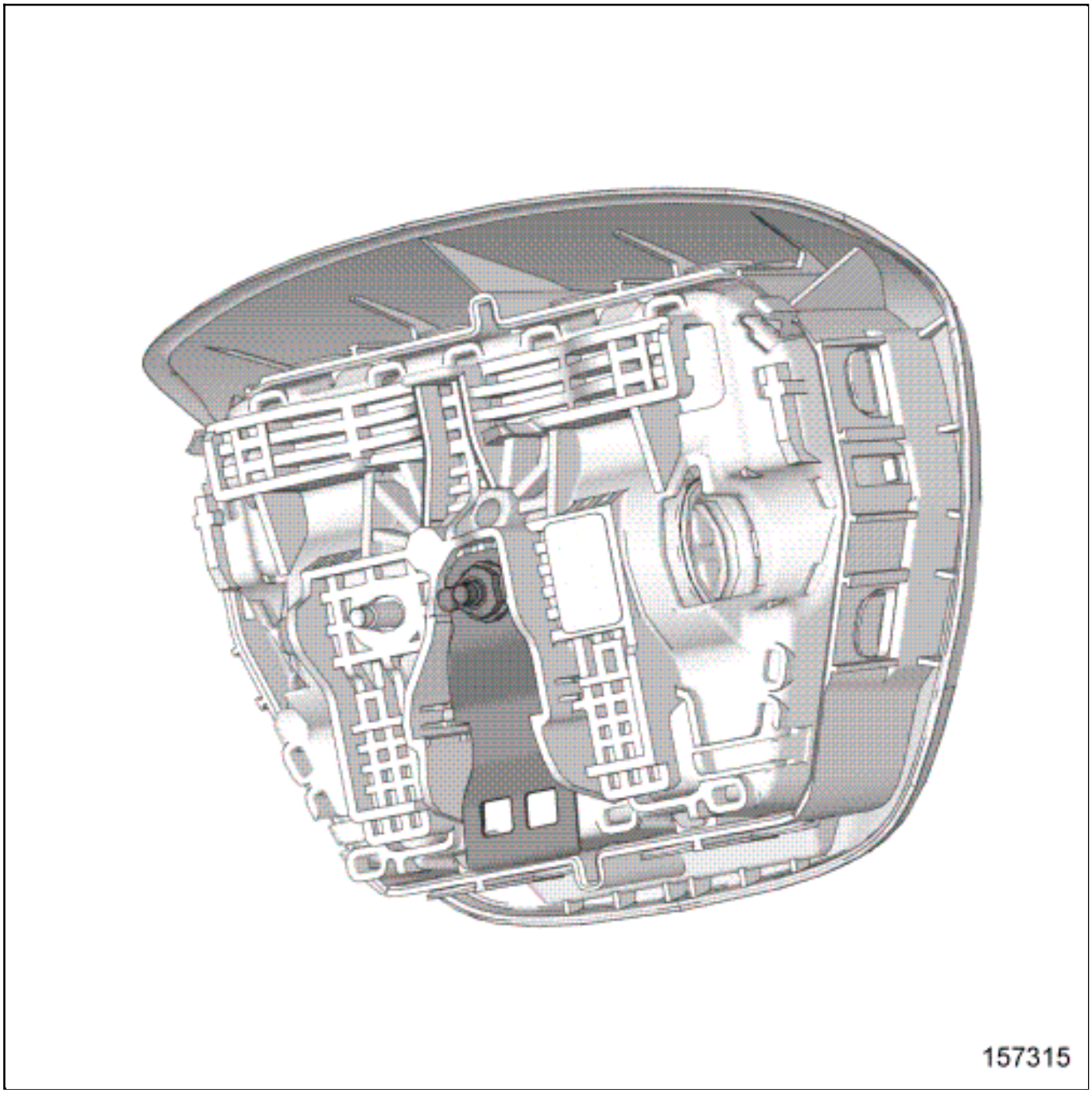

- Insert a screwdriver (type T30) into the aperture(1) located behind the steering wheel.

- Unclip the clip(2) by pushing the screwdriver, whilst pushing the airbag according to the direction (3) .

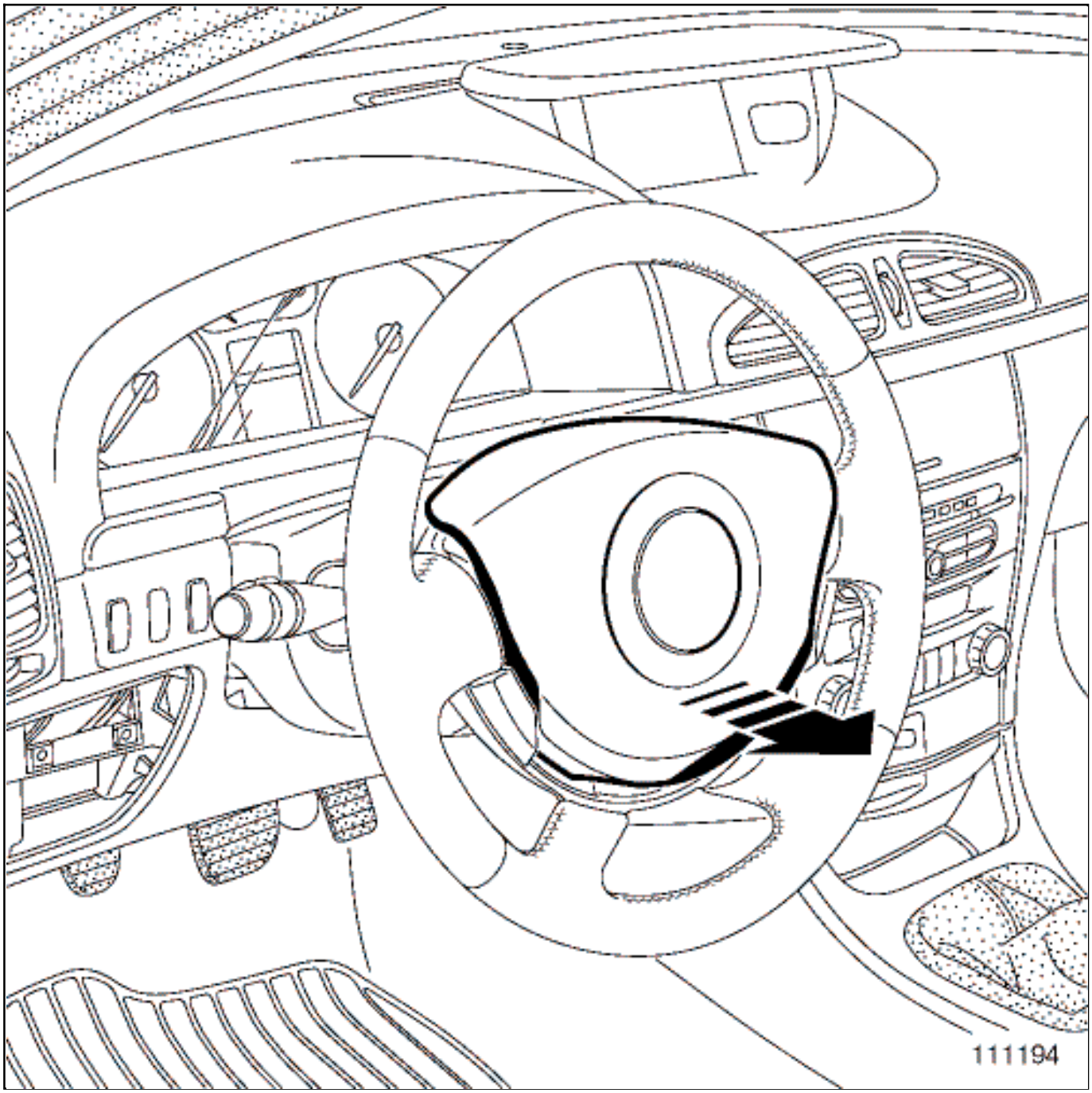

- Remove the driver's front airbag.

- Unlock the connector(s) of the driver's frontal airbag.

- Disconnect the connector(s).

REFITTING

1. REFITTING OPERATION FOR PART CONCERNED

- Proceed in the reverse order to removal.

2. FINAL OPERATION

- Remove the lockout of the 12V supply circuit12 V supply circuit : Lockout - Removal of lockout .

- Apply the procedure for activating the safety systems(see 88C, Airbags and pretensioners, Airbag and pretensioners: Precautions for the repair) .

3. CHECKING AFTER REPAIR

- Switch on the ignition.

- Check that there are no faults on the instrument panel.

DRIVESHAFT ASSEMBLY: EXPLODED VIEW

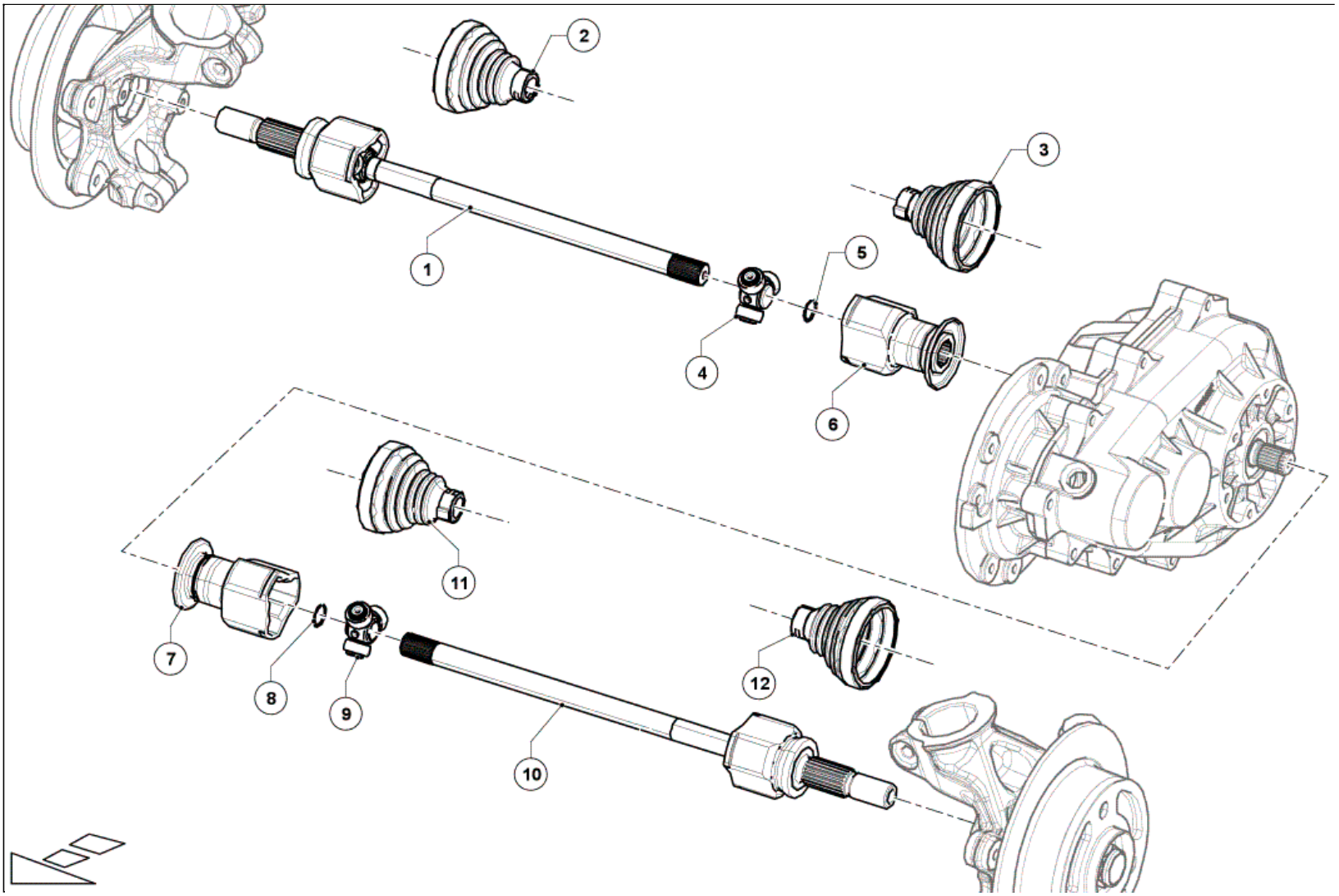

Illustration key: Description .

Marks	Designations	Informations
1	Right-hand driveshaft	(see 29A, Driveshafts , Rear wheel driveshaft: Removal - Refitting)
2	Right-hand driveshaft gaiter, wheel side	
3	Right-hand driveshaft gaiter, reducer side	
4	Right-hand tripod	
5	Circlip	
6	Right-hand driveshaft yok	
7	Left-hand driveshaft yok	
8	Circlip	
9	Left-hand tripod	
10	Left-hand driveshaft	(see 29A, Driveshafts , Rear wheel driveshaft: Removal - Refitting)
11	Left-hand driveshaft gaiter, reducer side	
12	Left-hand driveshaft gaiter, wheel side	

REAR BRAKE CALLIPER: REPAIR

Note, one or more warnings are present in this procedure

WARNING

- To avoid all risk of damage to the systems, apply the safety and cleanliness instructions and operation recommendations before carrying out any repair:
  - Brake circuit: Precautions for the repair
  - Vehicle: Precautions for the repair .

CAUTION

Prepare for the flow of fluid, and protect the surrounding components.

Location and specifications (tightening torques, parts always to be replaced, etc.):(see 33A, Rear axle components, Rear brake calliper assembly: Exploded view) .

REMOVAL

1. REMOVAL PREPARATION OPERATION

- Position the vehicle on a two-post lift Vehicle: Towing and lifting .
- Release the parking brake.
- Remove:
  - the rear wheel Wheel: Removal - Refitting ,
  - the rear brake calliper (see 33A, Rear axle components, Rear brake calliper assembly: Exploded view) .

2. REMOVAL OPERATION

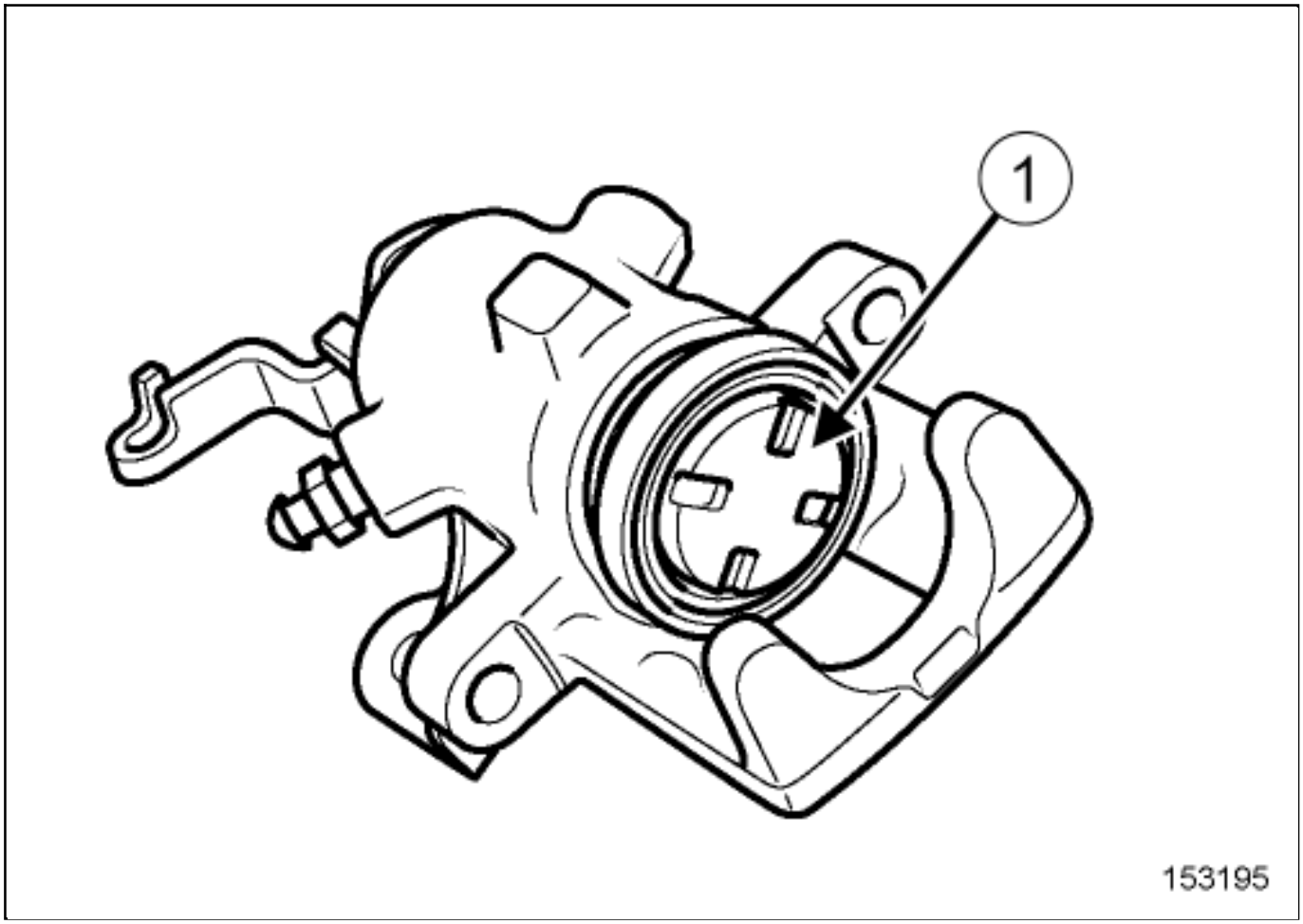

- Turn the end(1) of the calliper piston anti-clockwise as far as it will go.

- Remove (see 33A, Rear axle components, Rear brake calliper assembly: Exploded view) :
  - the brake calliper piston,
  - the dust seal.

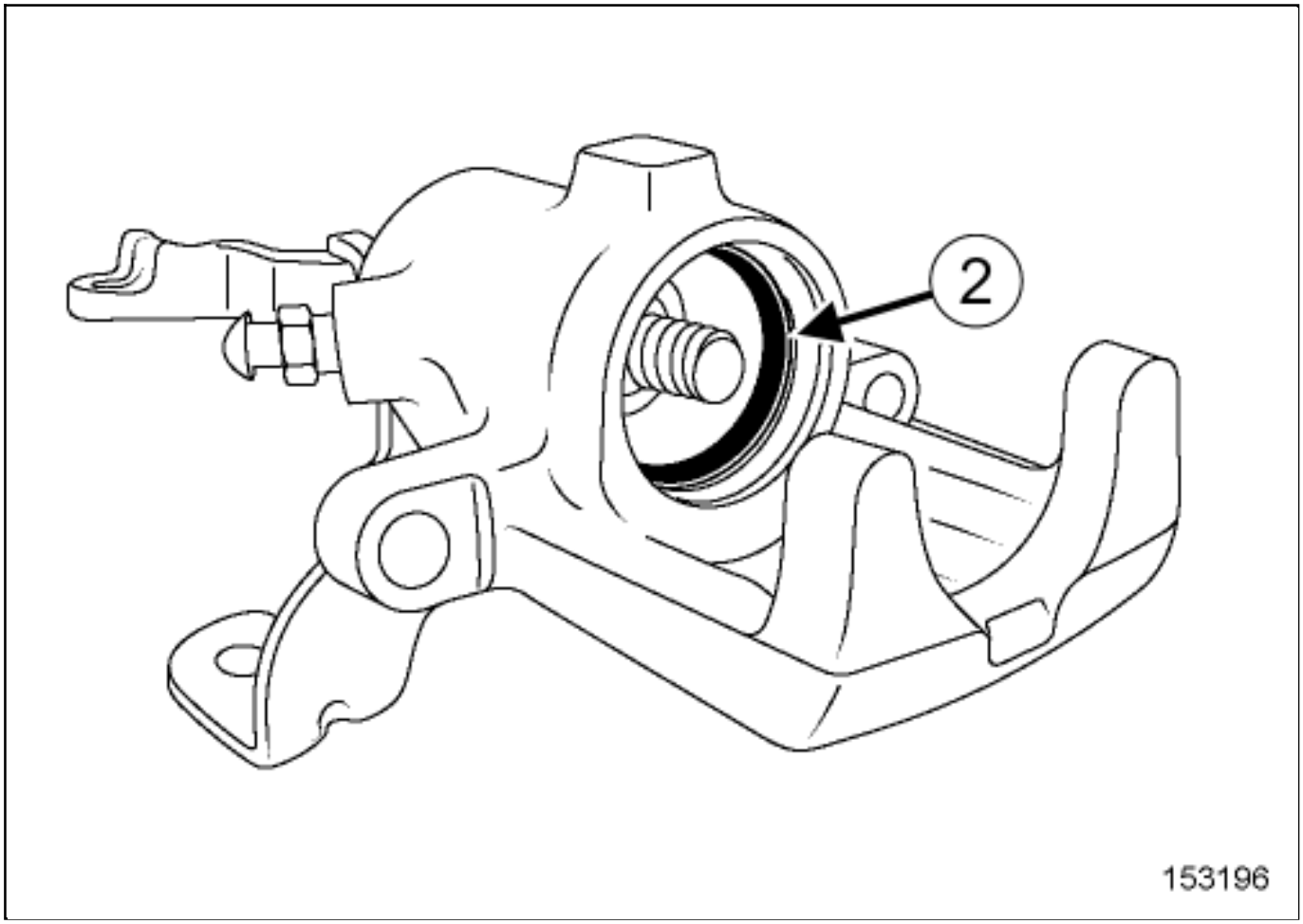

Remove the rectangular section seal(2) from the calliper groove.

REFITTING

1. REFITTING PREPARATION OPERATION

Replace the complete calliper in if there is:

- a scratch in the calliper bore,
- a scratch or crack on the calliper piston.

Clean using a wire brush and BRAKE CLEANERVehicle: Parts and consumables for the repair :

- the calliper mounting,
- the brake calliper.

Mount the brake calliper piston with the grease content in the repair kit.

2. REFITTING OPERATION

Refit the rectangular section seal into the calliper groove.

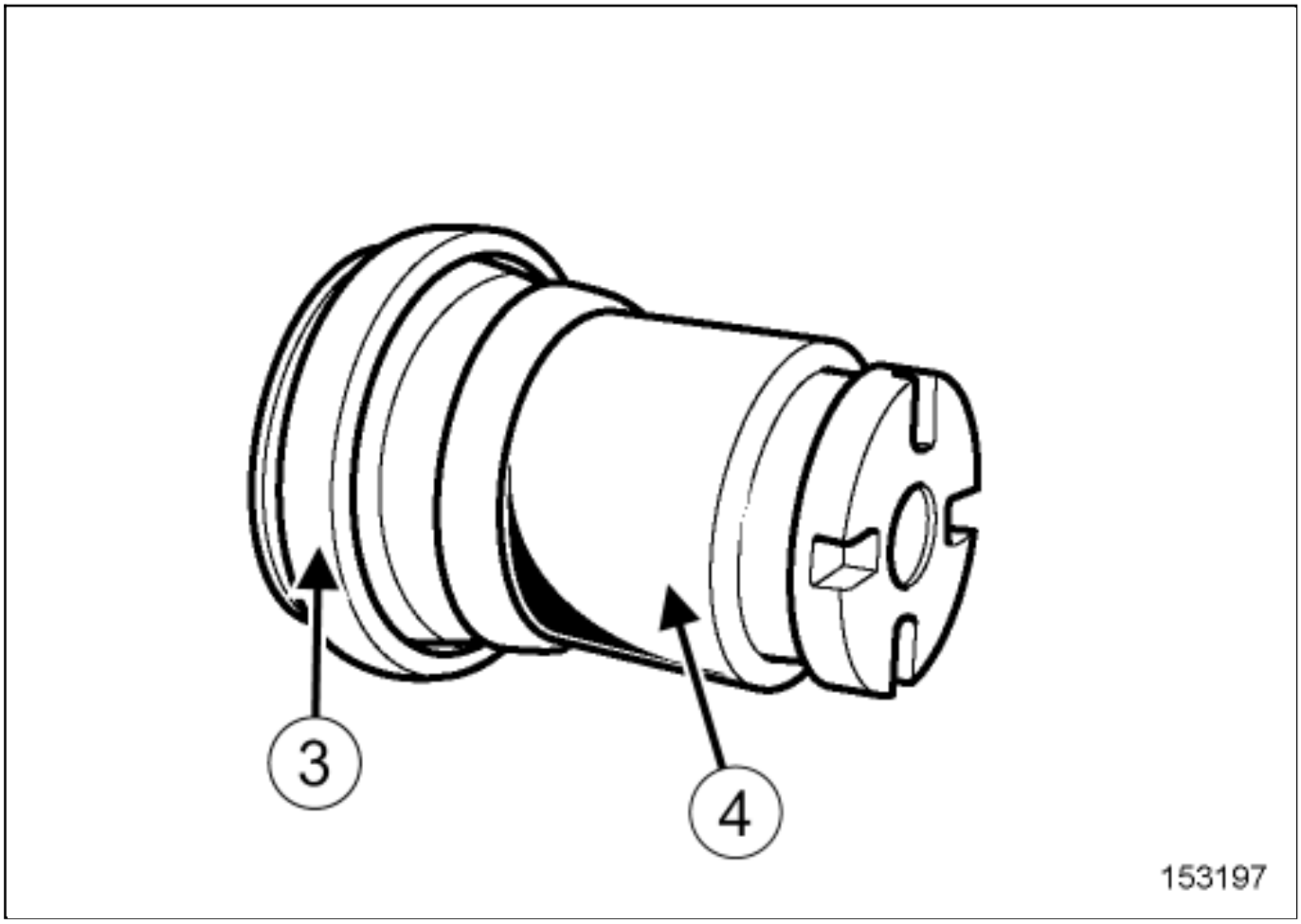

Grease the brake calliper piston.

Note:

Use the grease content in the repair kit.

- Refit the dust seal(3) on the brake calliper piston(4) .

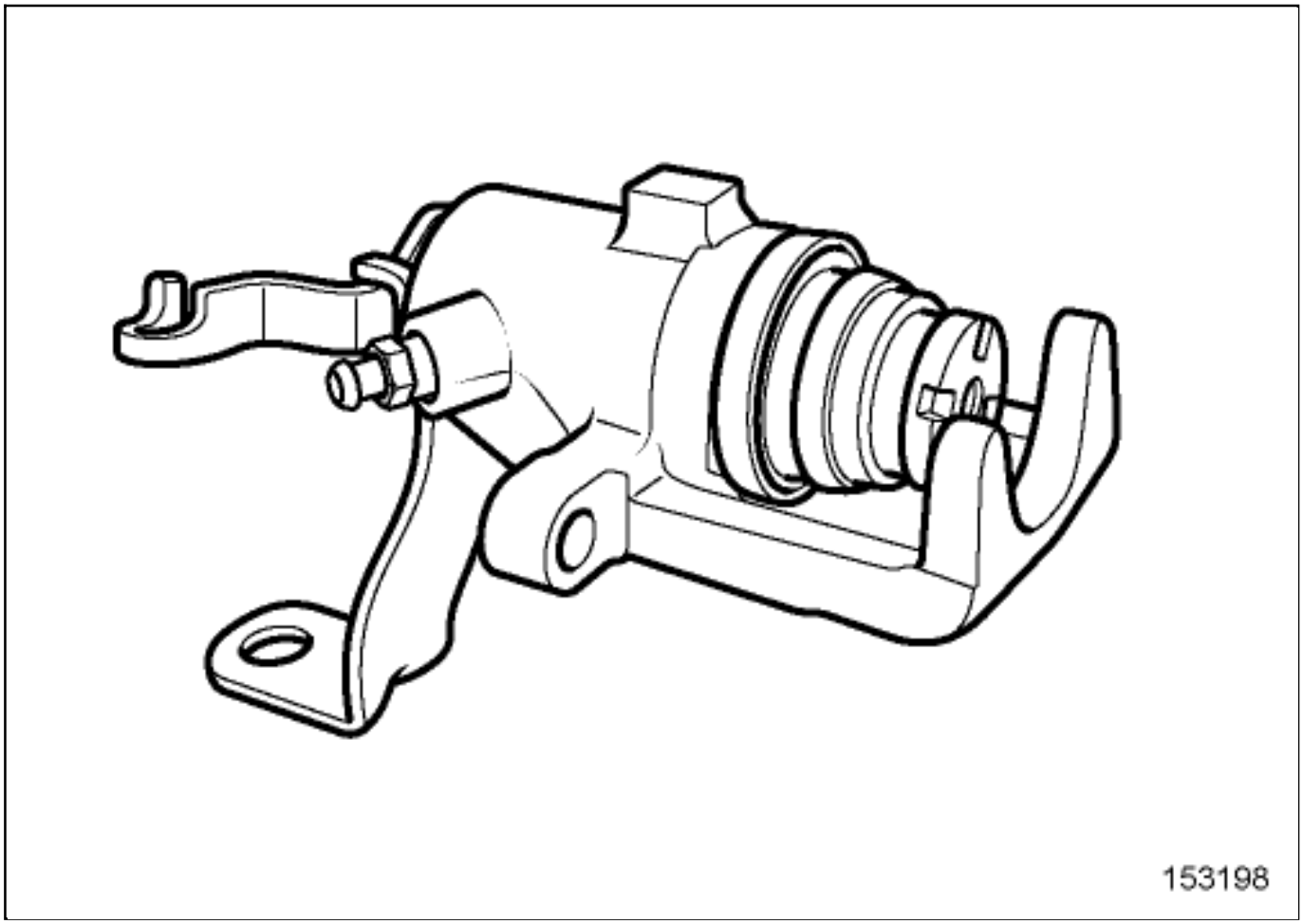

- Refit the "dust seal - brake calliper piston" assembly.
- Clip the dust seal on the brake calliper.
- Turn the brake calliper piston clockwise for refitting.

CAUTION

After any operation requiring removal of the parking brake cables from the callipers, it is essential to check that the parking brake system is operating correctly by applying the lever several times. If this fails to apply the parking brake, position the cables correctly in the brake compensator.

3. FINAL OPERATION

- Proceed in reverse order to removal.

- Fill up and bleed the brake circuitBraking circuit: Bleed .

WARNING

To avoid any accident, bring the pistons, brake pads and brake discs into contact by depressing the brake pad several times.

REAR SIGNALS - LIGHTING ASSEMBLY: EXPLODED VIEW

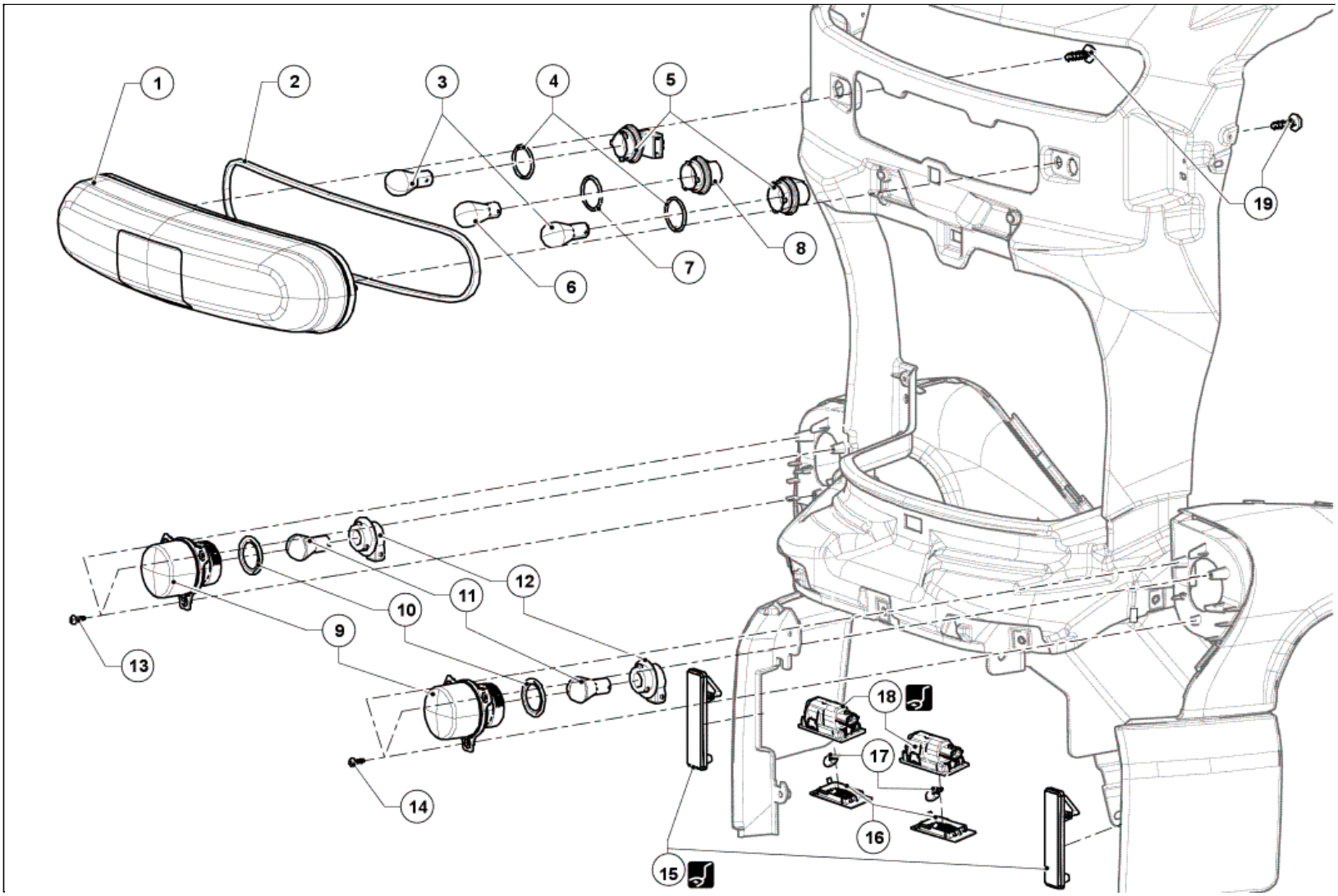

Illustration key: Description .

For fastenings with no specified tightening torque values, refer to the Table of Standard TorquesTightening torques: General information .

Marks	Designations	Informations
1	Centre light	
2	Centre light seal	
3	Side light / Stop bulbs	(see 81A, Rear lighting, Rear light bulb: Removal - Refitting)
4	Side light / Stop bulb holder seals	
5	Side light / Stop bulb holder	
6	Reverse bulb	(see 81A, Rear lighting, Rear light bulb: Removal - Refitting)
7	Reverse bulb holder seal	
8	Reverse bulb holder	
9	Direction indicator lights	
10	Direction indicator bulb holder seals	
11	Direction indicator bulbs	(see 81A, Rear lighting, Rear light bulb: Removal - Refitting)
12	Direction indicator bulb holders	
13	Left-hand direction indicator light screw	
14	Right-hand direction indicator light screw	
15	Reflectors	(Car. 1363) (see 81A, Rear lighting, Rear light on bumper: Removal - Refitting)
16	Number plate light diffusers	
17	Number plate light bulbs	
18	Number plate lights	(Car. 1363) (see 81A, Rear lighting, Number plate light: Removal - Refitting)
19	Centre light screws	

ELECTRIC TRACTION MOTOR ASSEMBLY: EXPLODED VIEW

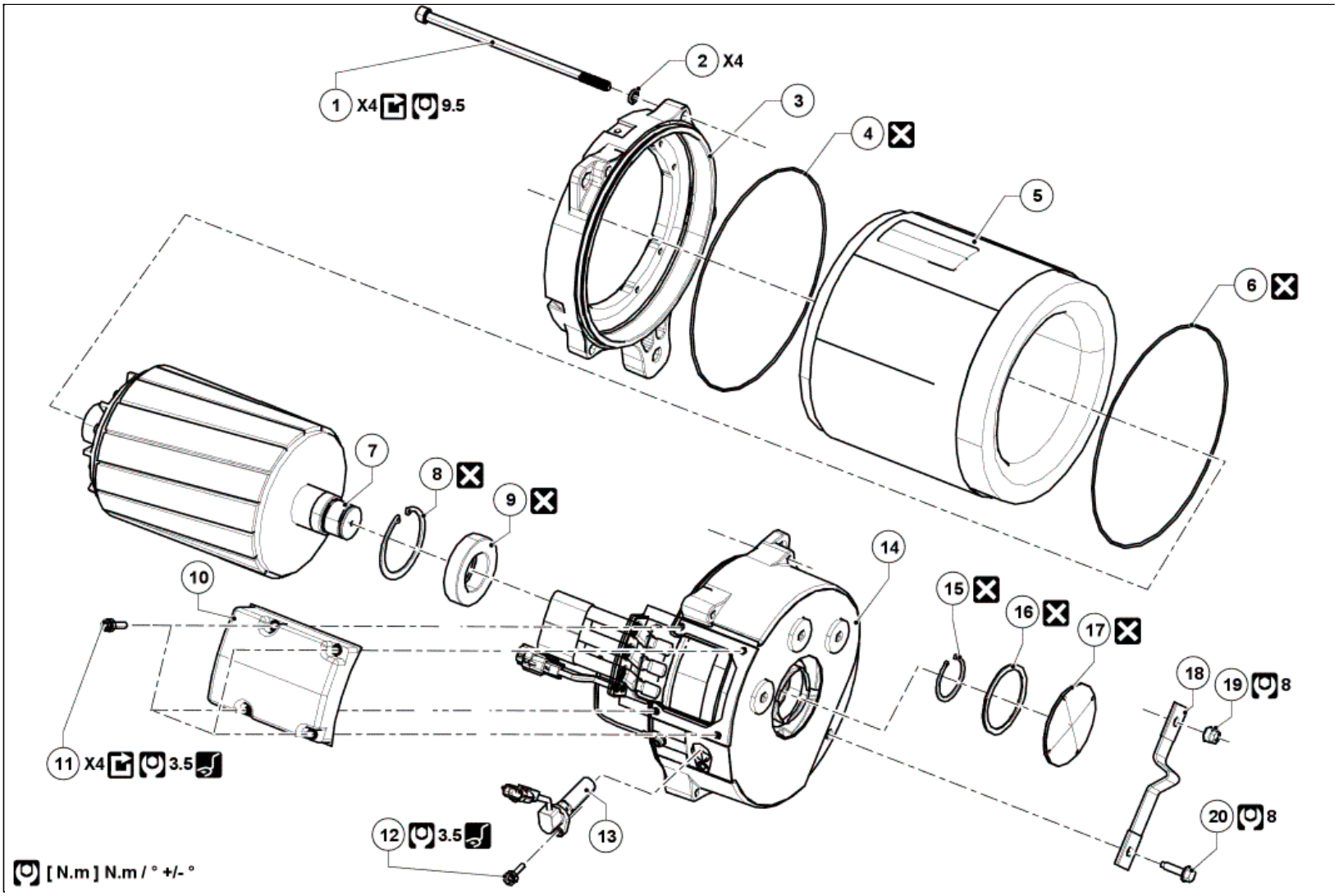

Illustration key: Description .

Marks	Designations	Informations
1	Motor assembly bolts	
2	Washers of motor assembly bolts	
3	Motor front endshield	
4	Motor front endshield O-ring	
5	Stator	
6	Motor rear endshield O-ring	
7	Rotor	
8	Rotor bearing snap ring	
9	Rotor bearing	Electric traction motor rotor bearing : Removal - Refitting
10	Terminal box cover	
11	Terminal box cover bolts	(Mot. 1608)
12	Rotor position sensor bolt	(Mot. 1608)
13	Rotor position sensor	Rotor position sensor: Removal - Refitting
14	Motor rear endshield	
15	Rotor snap ring	
16	O-ring	
17	Rotor bearing plastic cover	
18	Motor ground strap	
19	Motor ground strap nut on body	
20	Motor ground strap bolt	

ELECTRIC TRACTION MOTOR ROTOR BEARING : REMOVAL - REFITTING

Note, one or more warnings are present in this procedure

Special tooling required	
3CG electric traction motor bearing replacement kit	Mot. 2001

WARNING

- To avoid all risk of damage to the systems, apply the safety and cleanliness instructions and operation recommendations before carrying out any repair:
  - Vehicle: Precautions for the repair .

Locations and specifications (tightening torques, parts always to be replaced, etc.)Traction motor assembly: Exploded view .

REMOVAL

1. REMOVAL PREPARATION OPERATION

- Position the vehicle on a two-post liftVehicle: Towing and lifting .

WARNING

DANGER: HIGH VOLTAGE VEHICLE.

Risks of serious burns or electric shock that may prove fatal.

Before carrying out any work on the vehicle, it is essential that you adhere to the instructions regarding vehicle voltage cut-off. This work must be carried out by an employee who is qualified and authorized to work on a high-voltage onboard network Vehicle: Lockout - Removal of lockout .

-

Lockout the vehicleVehicle: Lockout - Removal of lockout .

- Remove the electric traction motor[Traction motor assembly: Exploded view] .

- Work on the clean area.

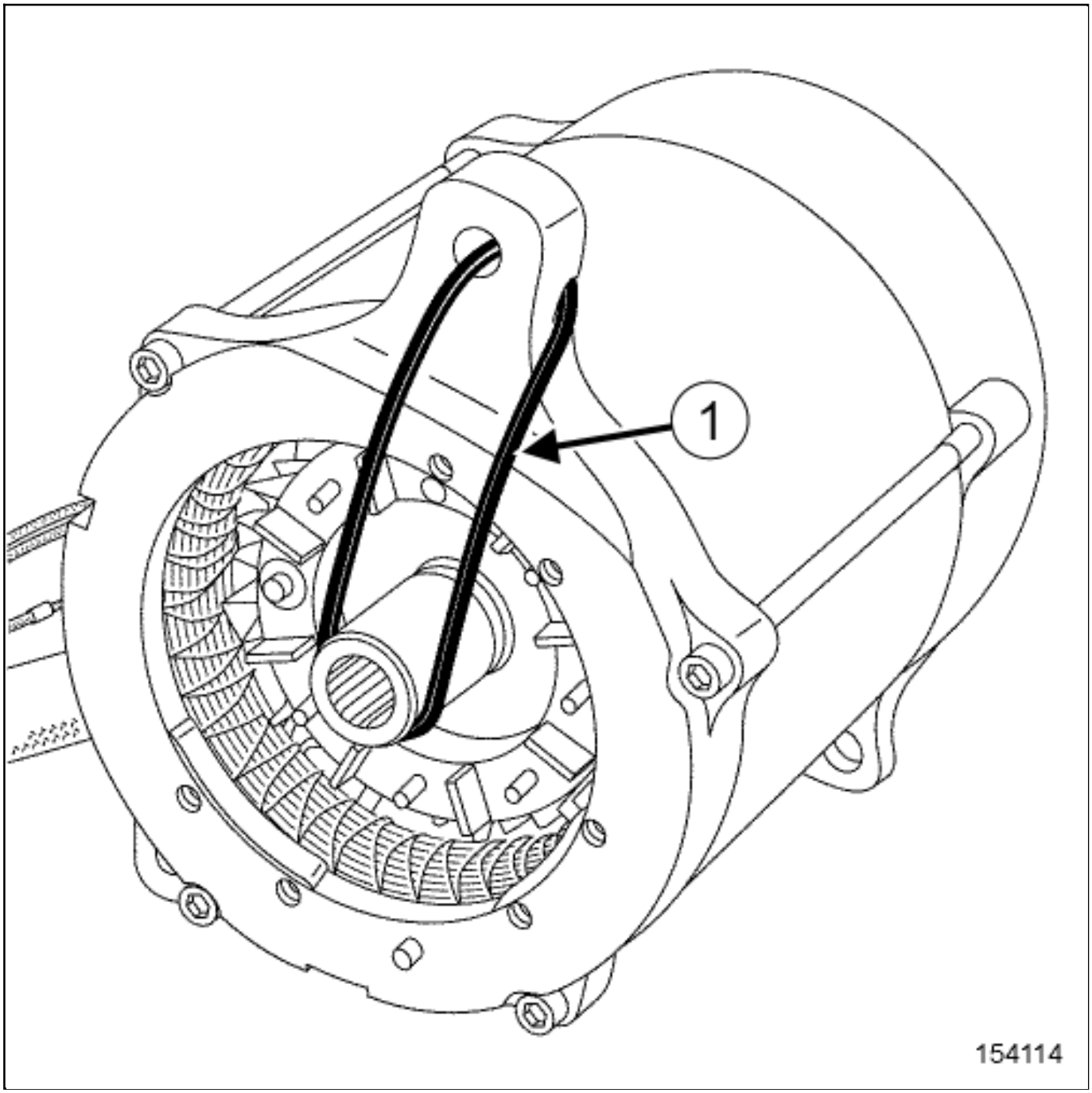

- Support the rotor using a strap(1) .

Note:

It is essential to support the rotor during the motor handling to avoid damaging the stator and the rotor.

2. REMOVAL OPERATION

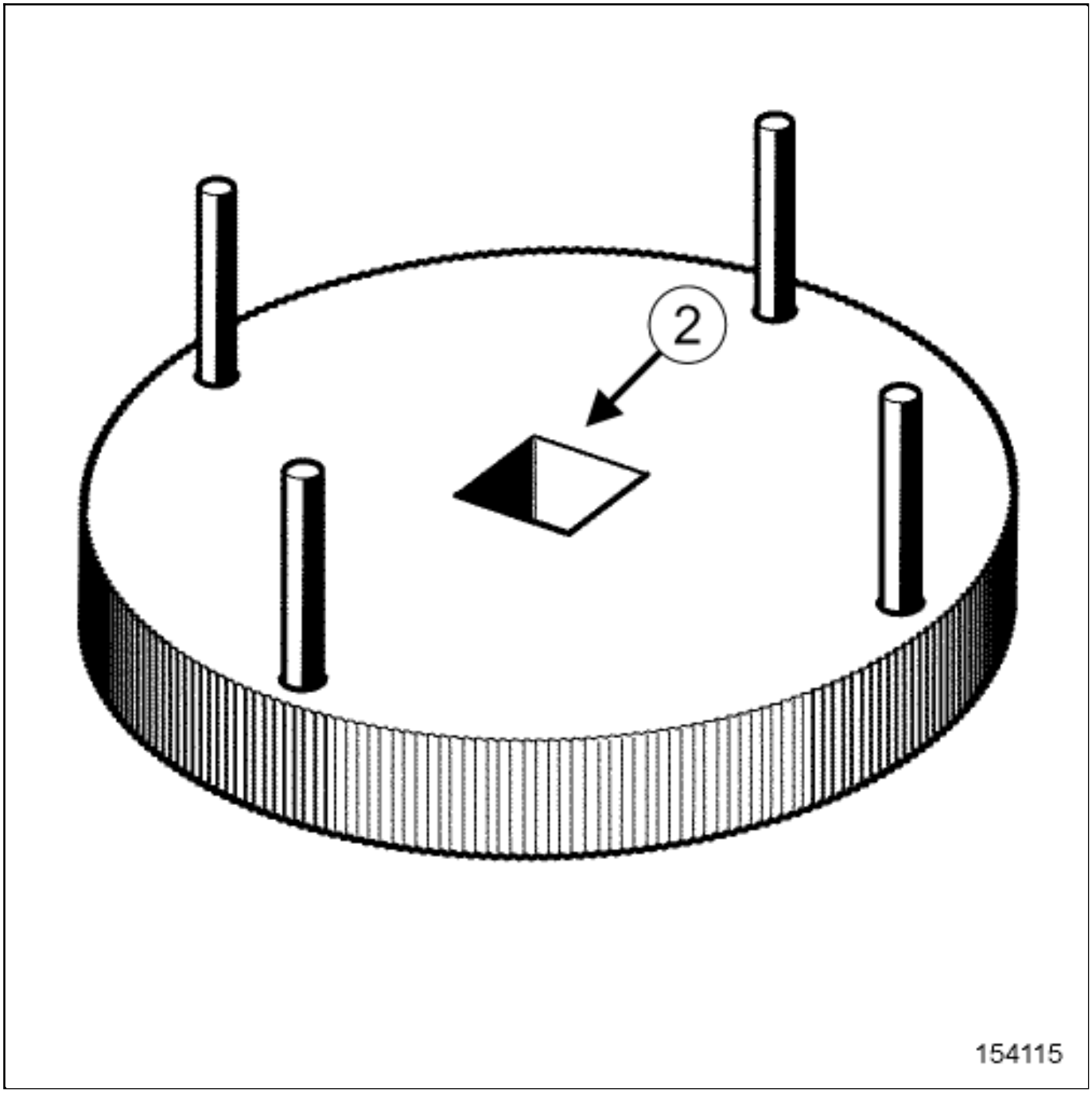

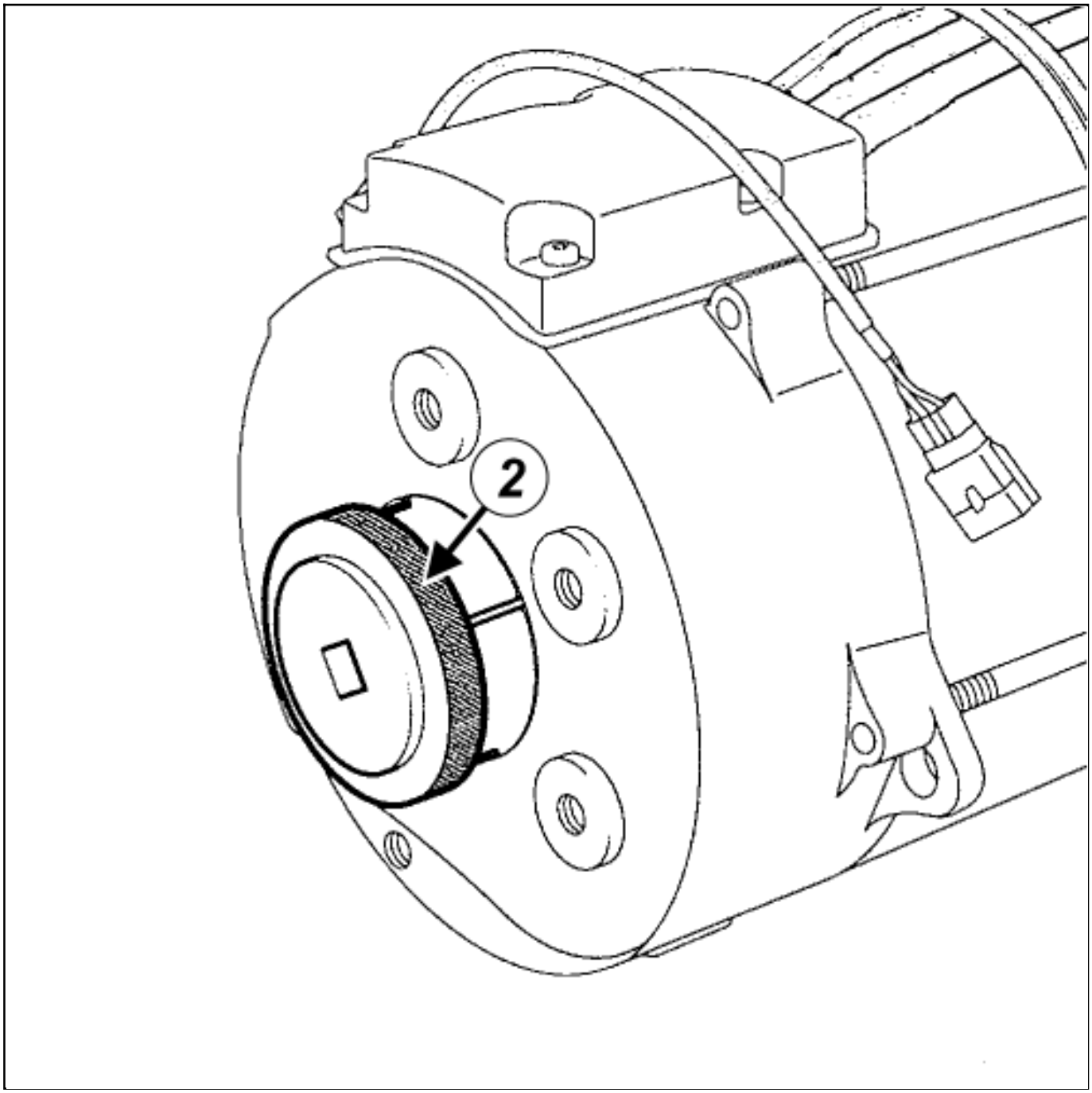

Remove **Traction motor assembly: Exploded view** :

- the rotor bearing plastic cover using the tool3CG electric traction motor bearing replacement kit(**Mot. 2001**) /1 (**2**) by turning it a quarter of a turn clockwise,
- the O-ring,
- the rotor snap ring,

- the rotor position sensor bolt,
- the rotor position sensor,
- the terminal box cover bolts,
- the terminal box cover.

Cut the strap supporting the rotor.

Attach the wiring with a strap

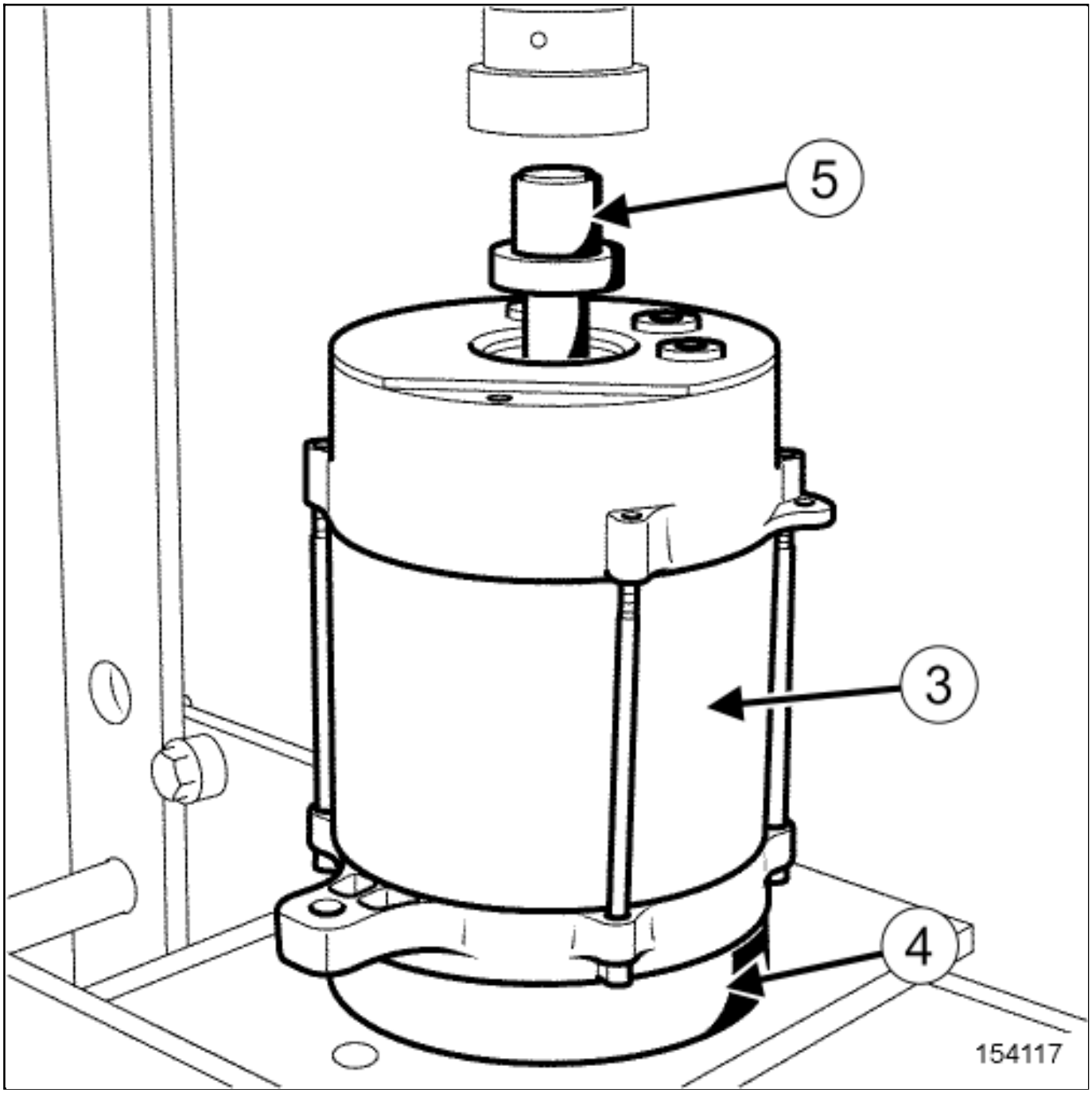

Position:

- the motor assembly(3) on the tool3CG electric traction motor bearing replacement kit(Mot. 2001) /3 (4) ,
- the "motor assembly - tool" assembly under the hydraulic press (two operators),
- the tool3CG electric traction motor bearing replacement kit(Mot. 2001) /2 (5) on the rotor axle.

Note:

28 mm side of the tool(5) must be used for the rotor axle.

- Remove the rotor with the hydraulic pressTraction motor assembly: Exploded view .

Note:

Be careful not to damage the stator winding.

Mechanical contact or mechanical shock to coil causes the destruction of the traction motor.

- Remove the "motor assembly-tool" assembly from the hydraulic press (two operators).

- Lift the stator to separate rotor and stator (two operators).

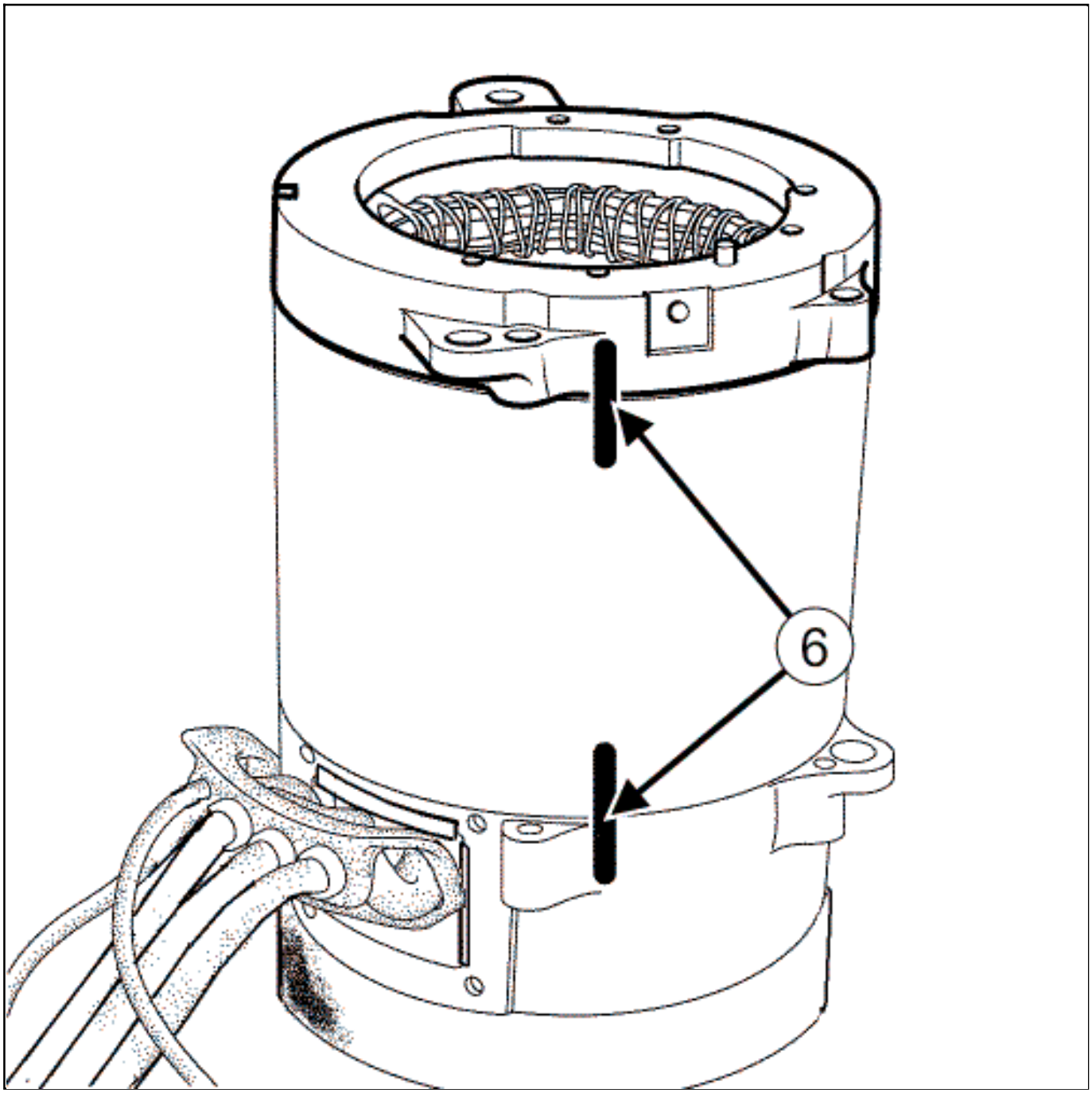

Check the position of the different parts(6) .

Remove Traction motor assembly: Exploded view :

- the motor assembly bolts,
- the washers of motor assembly bolts,

- the motor front endshield,
- the motor fornt endseild O-ring.

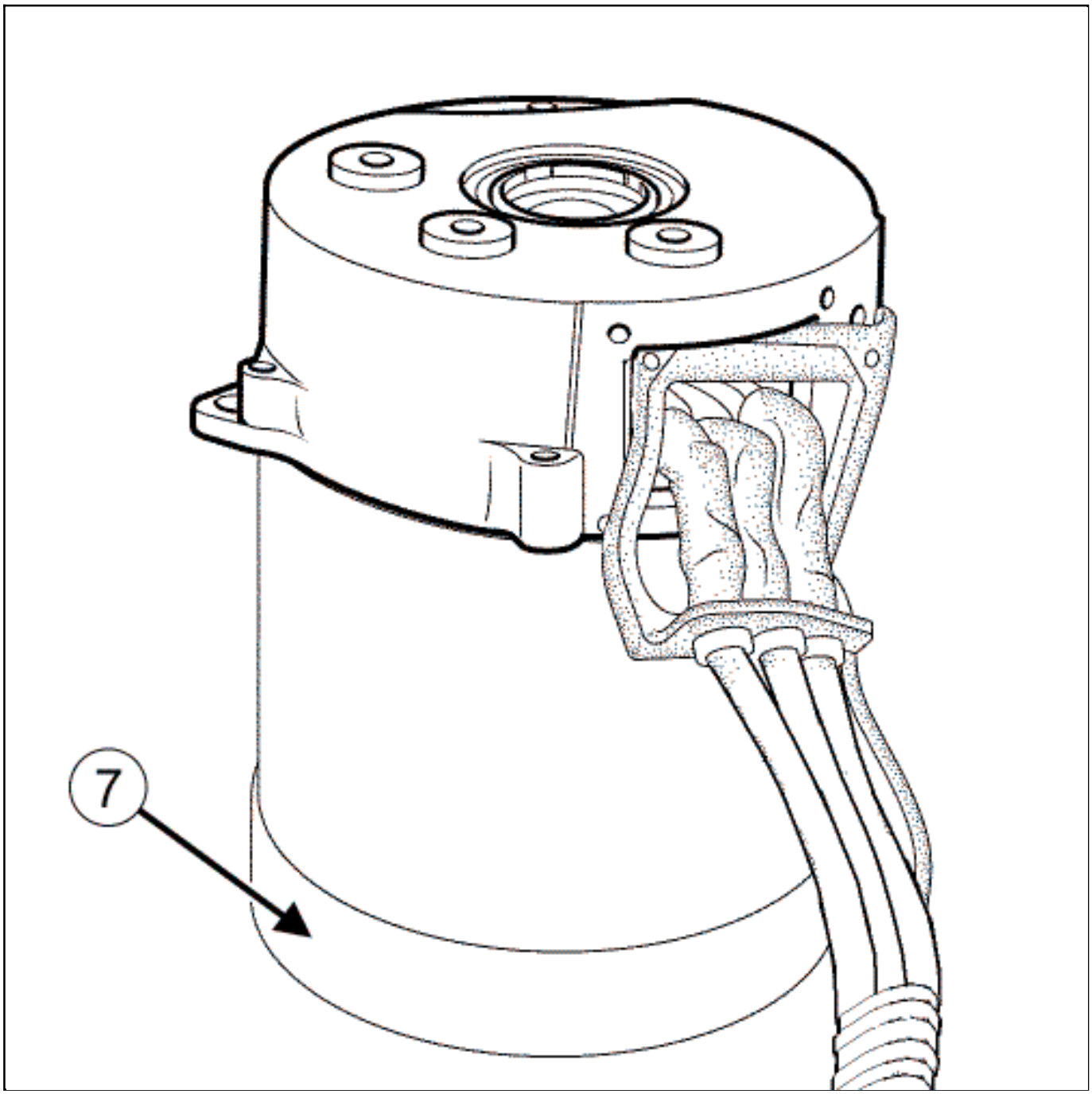

- Turn the motor assembly.
- Position the motor assembly on the tool3CG electric traction motor bearing replacement kit(Mot. 2001) /3 (7) .

Remove **Traction motor assembly: Exploded view** :

- the motor rear endshield,
- the motor rear endshield O-ring,
- the rotor bearing snap ring.

> Note:
>
> Be careful to perform the operation without creating fracture initiation of the electric cables in the coil.

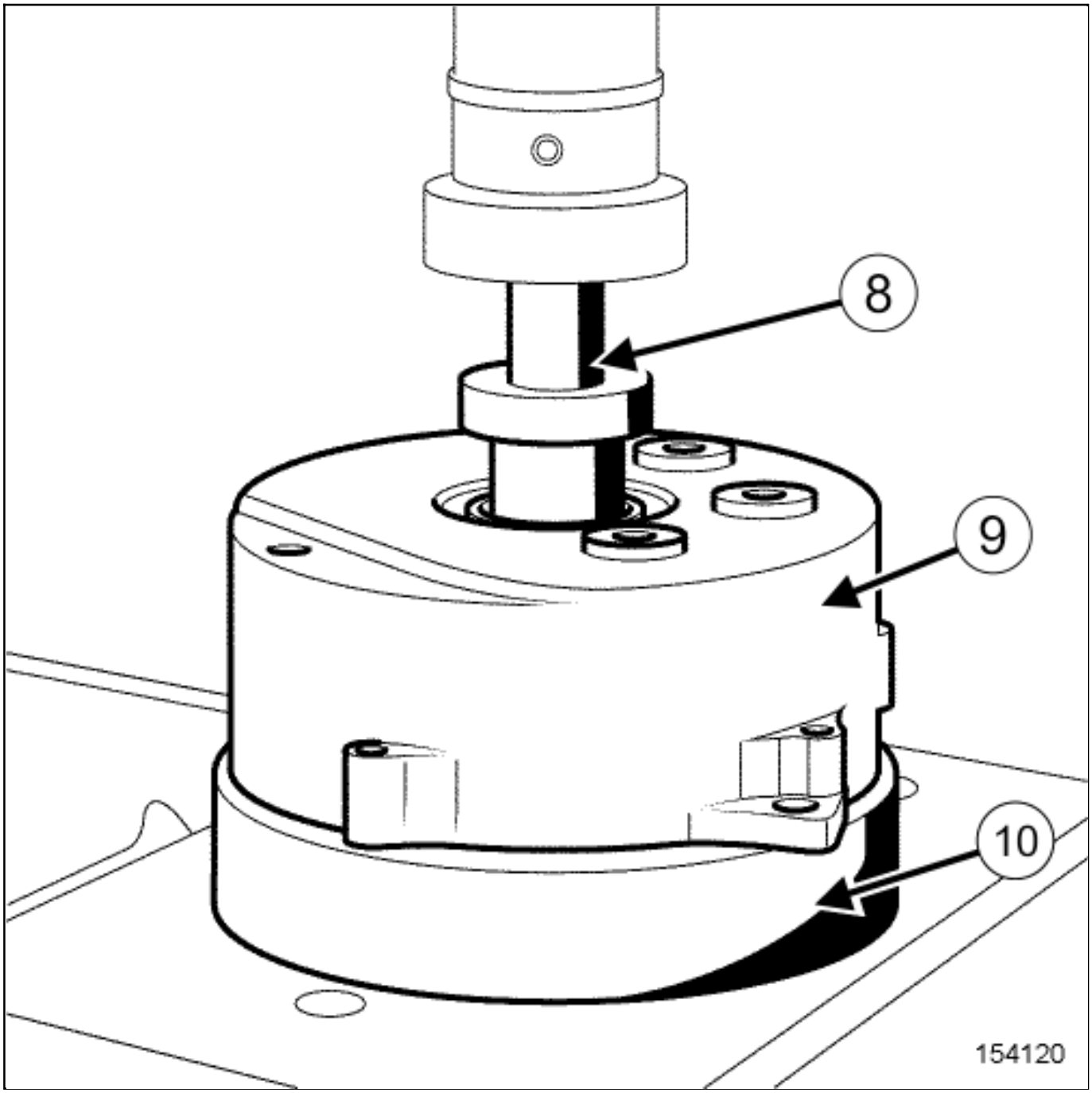

Position:

- the "motor rear endshield(9) - tool3CG electric traction motor bearing replacement kit(Mot. 2001) /3 (10) " assembly under the hydraulic press,
- the tool3CG electric traction motor bearing replacement kit(Mot. 2001) /2 (8) on the rotor bearing.

Note:

40 mm side of the tool(8) must be used for the rotor bearing.

Attention to the use of the press because the housing is made of aluminum.

Remove the rotor bearing Traction motor assembly: Exploded view with the hydraulic press.

REFITTING

1. REFITTING PREPARATION OPERATION

Clean:

- the rotor bearing surface on the motor rear endshield,
- the rotor bearing surface on the rotor.
- using the break cleaner and lint free cloth

Control:

- the rotor bearing surface on the motor rear endshield,
- the rotor bearing surface on the rotor.

If necessary, replace damaged components.

2. REFITTING OPERATION

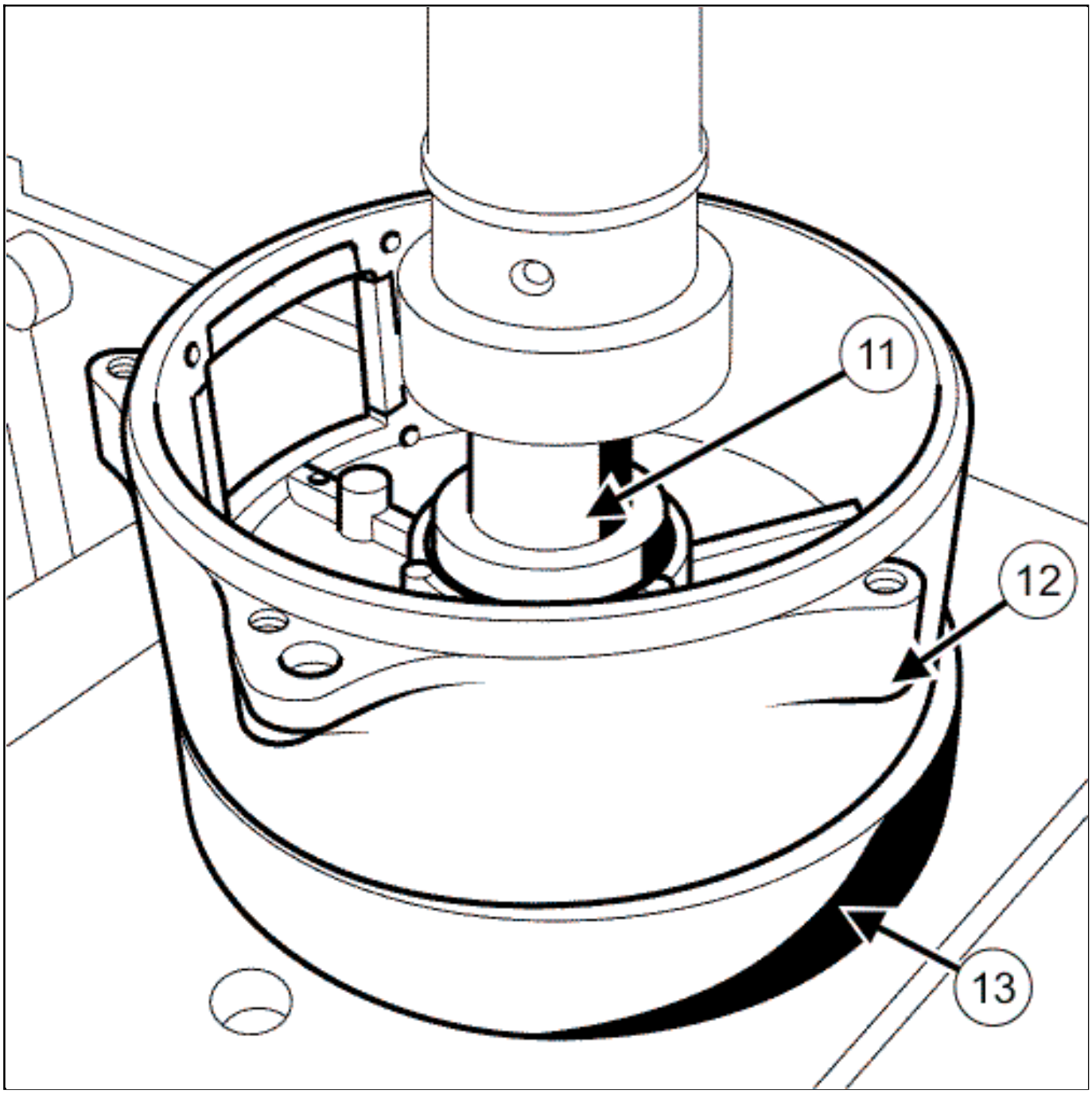

Position:

- the motor rear endshield(12) - tool3CG electric traction motor bearing replacement kit(Mot. 2001) /3 (13) " assembly under the hydraulic press,
- the rotor bearing on the motor rear endshield,
- the tool3CG electric traction motor bearing replacement kit(Mot. 2001) /2 (11) on the rotor bearing.

Note:

28 mm side of the tool(11) must be used for the rotor bearing.

Attention to the use of the press because the housing is made of aluminum.

Refit Traction motor assembly: Exploded view :

- the rotor bearing with the hydraulic press,
- the rotor bearing snap ring.

Remove the "motor rear endshield - tool" assembly from the hydraulic press.

Refit Traction motor assembly: Exploded view :

- the motor rear endshield O-ring on the motor rear endshield,
- the motor rear endshield on the stator,
- the motor front endshield O-ring on the motor front endshield,
- the motor front endshield on the stator,
- the washers of motor assembly screws,
- the motor assembly screws.

Note:

Pay attention of the marked lines.

Torque tighten the motor assembly screwsTraction motor assembly: Exploded view .

- Tighten the screws in criss-cross pattern

- Mark always the screws with PAINT MARKER.

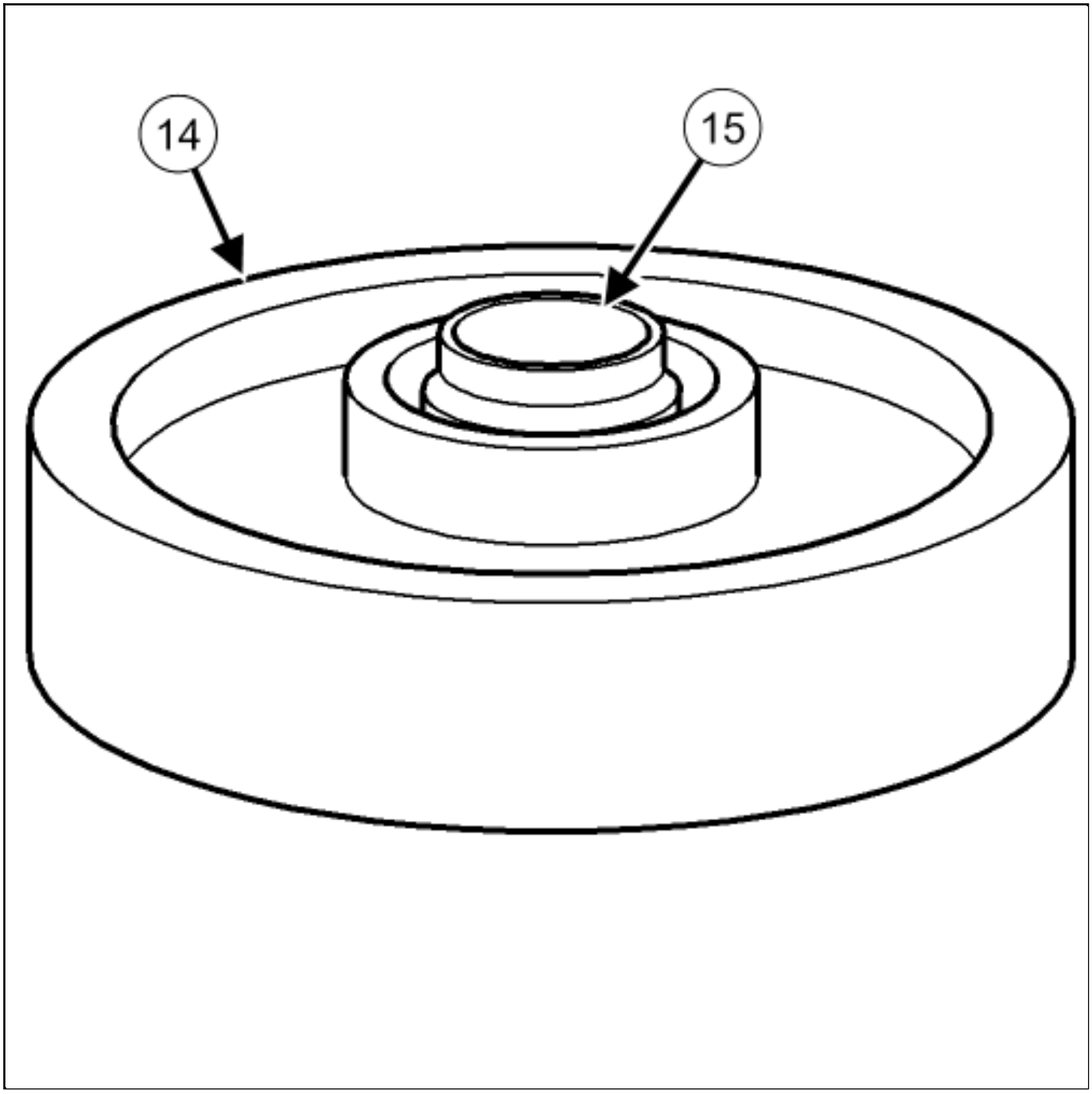

- Assemble tools 3CG electric traction motor bearing replacement kit(Mot. 2001) /4 (15) with 3CG electric traction motor bearing replacement kit(Mot. 2001) /3 (14) .

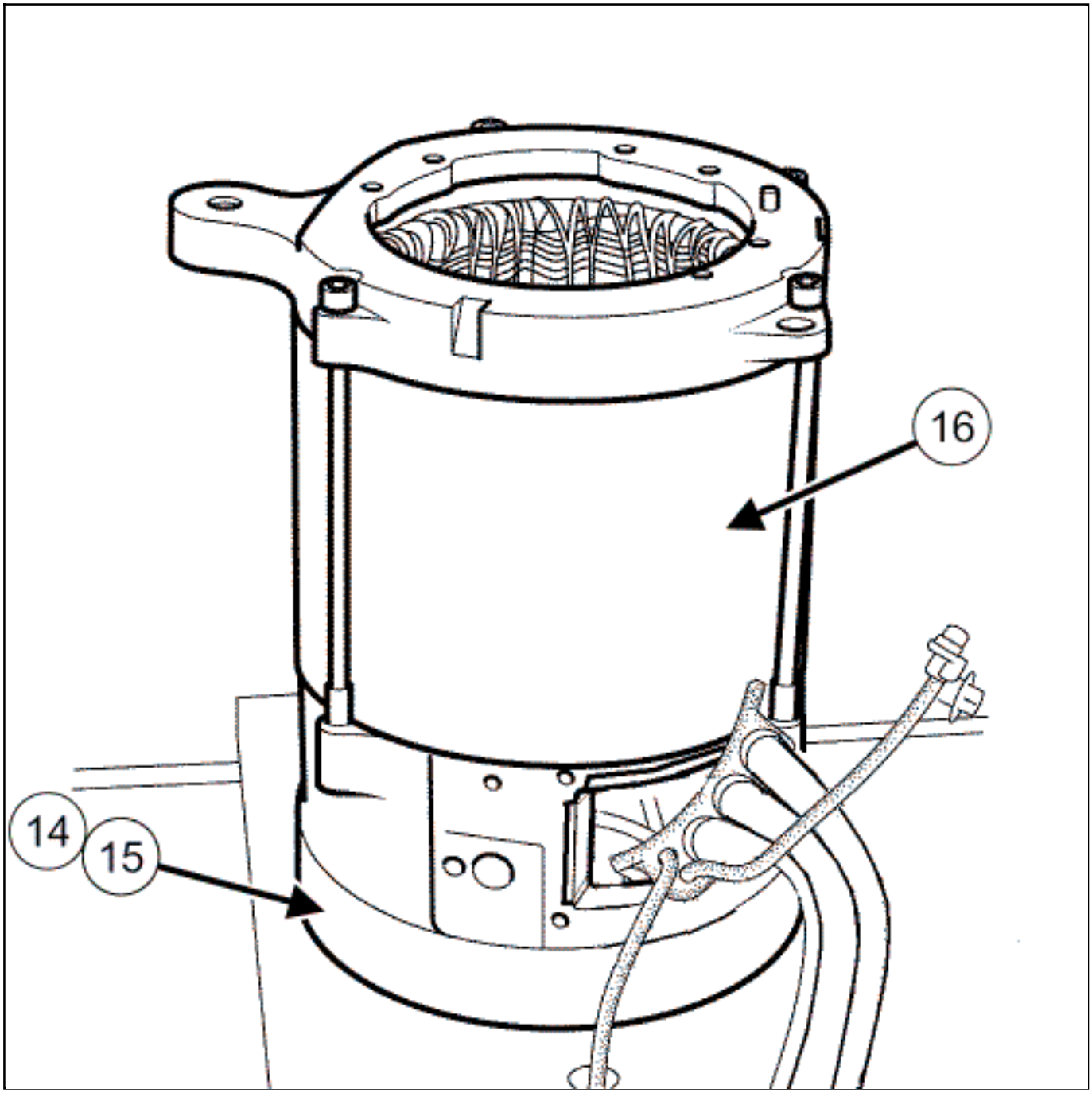

Position **Traction motor assembly: Exploded view** :

- the motor assembly(**16**) on the tools3CG electric traction motor bearing replacement kit(**Mot. 2001**) /3 + 3CG electric traction motor bearing replacement kit(**Mot. 2001**) /4 (**14**) (**15**) ,
- the "motor assembly - tool" assembly under the hydraulic press with two operators.

Attach the wiring with a strap

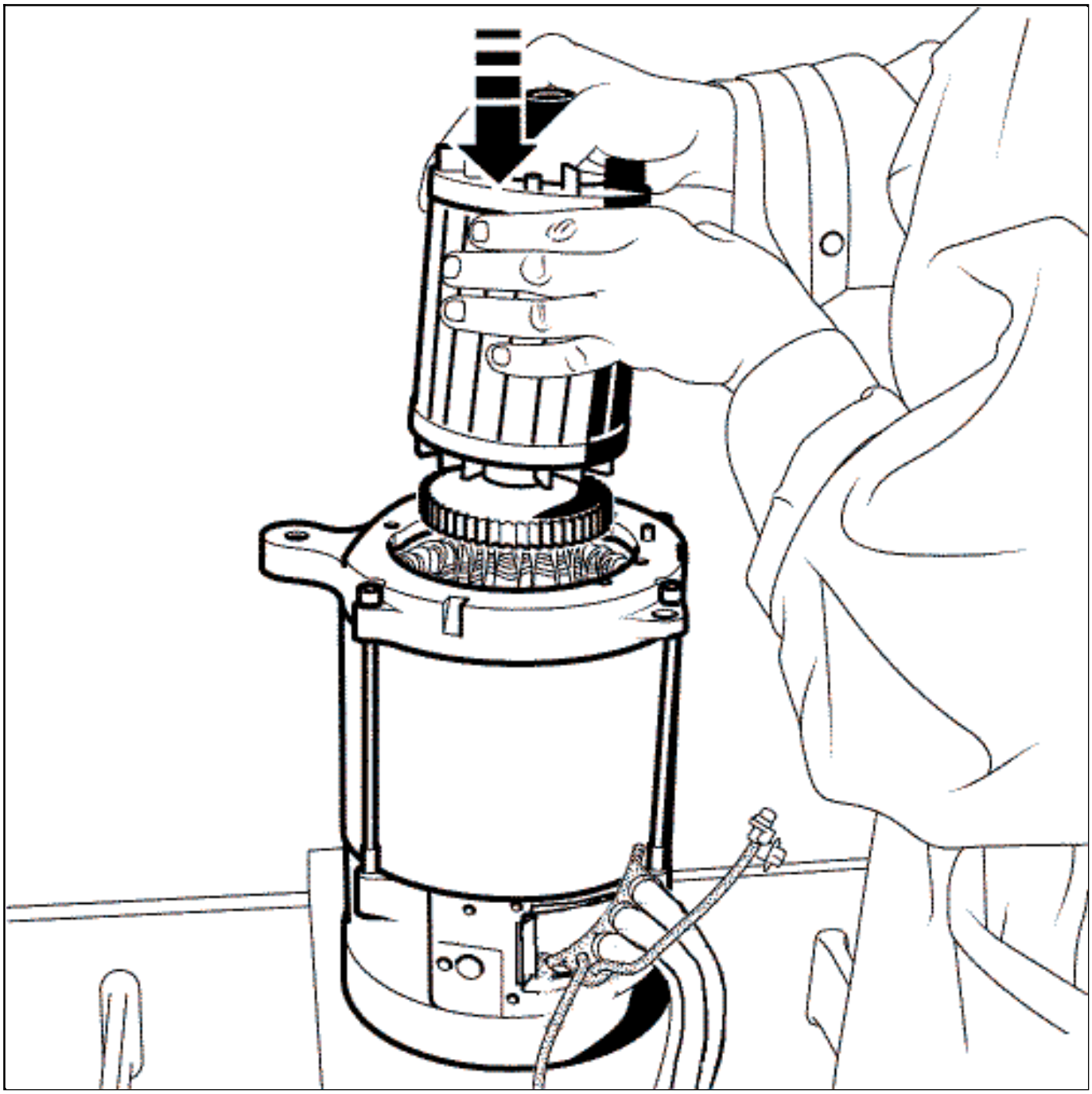

Position the rotor in the motor assembly along the stator axis.

Note:

Be careful not to damage the stator winding with the target or the rotor.

Mechanical contact or mechanical shock to coil causes the destruction of the traction motor.

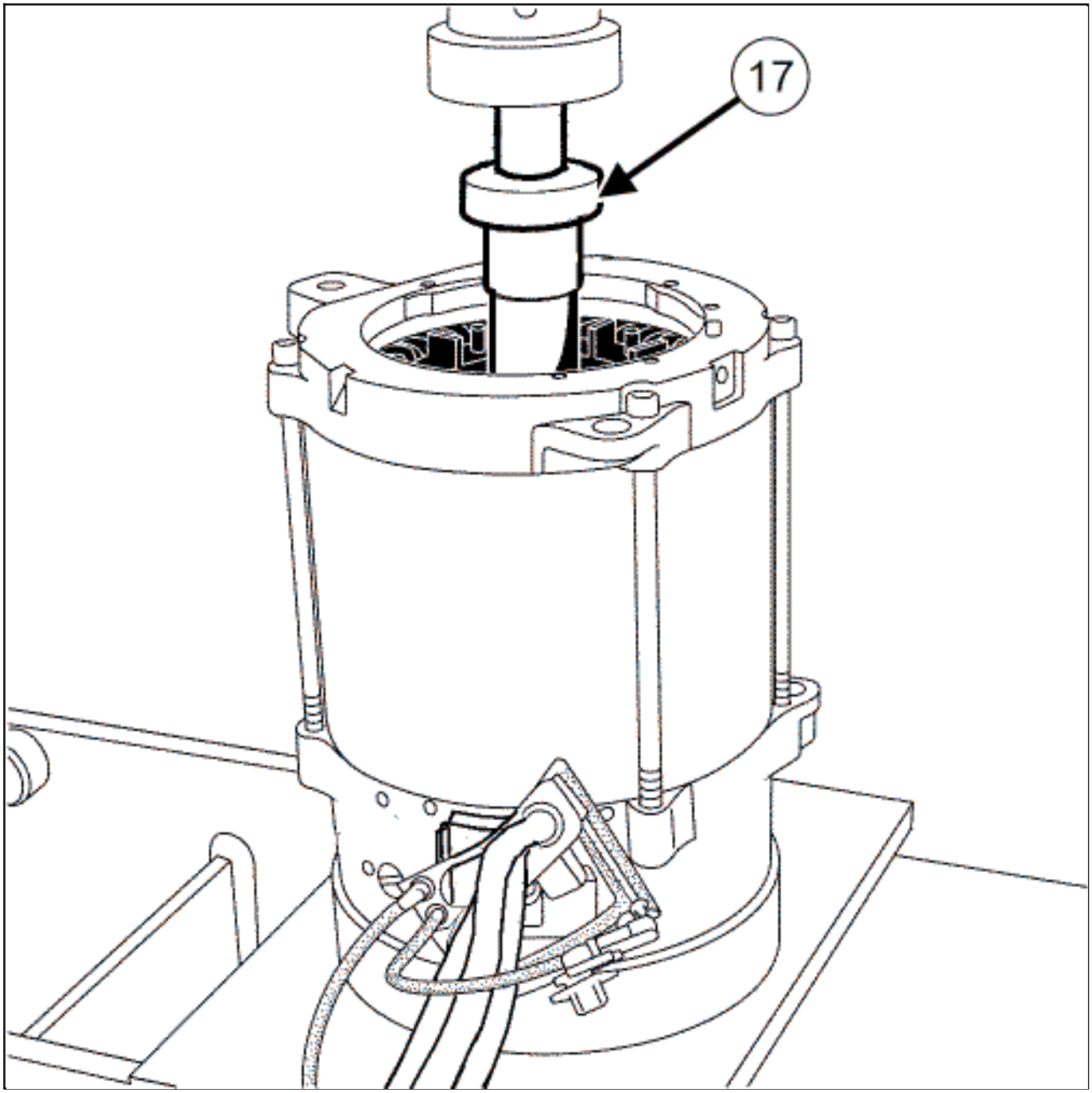

❑

Position the tool 3CG electric traction motor bearing replacement kit(Mot. 2001) /2 (17) on the rotor axle.

Note:

40 mm side of the toolmust be used for the rotor axle.

- Refit the rotor with the hydraulic press.
- Remove the assembly from the hydraulic press with two operators
- Fit the assembly on the3CG electric traction motor bearing replacement kit(Mot. 2001) /3
- Refit Traction motor assembly: Exploded view :
  - the rotor snap ring,
  - the O-ring,
  - the rotor bearing plastic cover with the tool3CG electric traction motor bearing replacement kit(Mot. 2001) /1 (2) ,
  - the terminal box cover,
  - the terminal box cover screws,
- Torque tighten the terminal box cover screws.
- Tighten the screws in criss-cross pattern.
- Mark always the screws with PAINT MARKER.
- Refit Traction motor assembly: Exploded view :
  - the rotor position sensor,
  - the rotor position sensor screws.

Torque tighten the rotor position sensor screws.

- Mark always the screws with PAINT MARKER.

3. FINAL OPERATION

- Proceed in the reverse order to removal.

- Remove the lockout of the vehicle**Vehicle: Lockout - Removal of lockout** .

Repair-14x01x01x04-01x37-1-1-1.xml

XSL version : 3.02 du 22/07/11

ELECTRIC TRACTION REDUCTION GEARING ASSEMBLY: EXPLODED VIEW

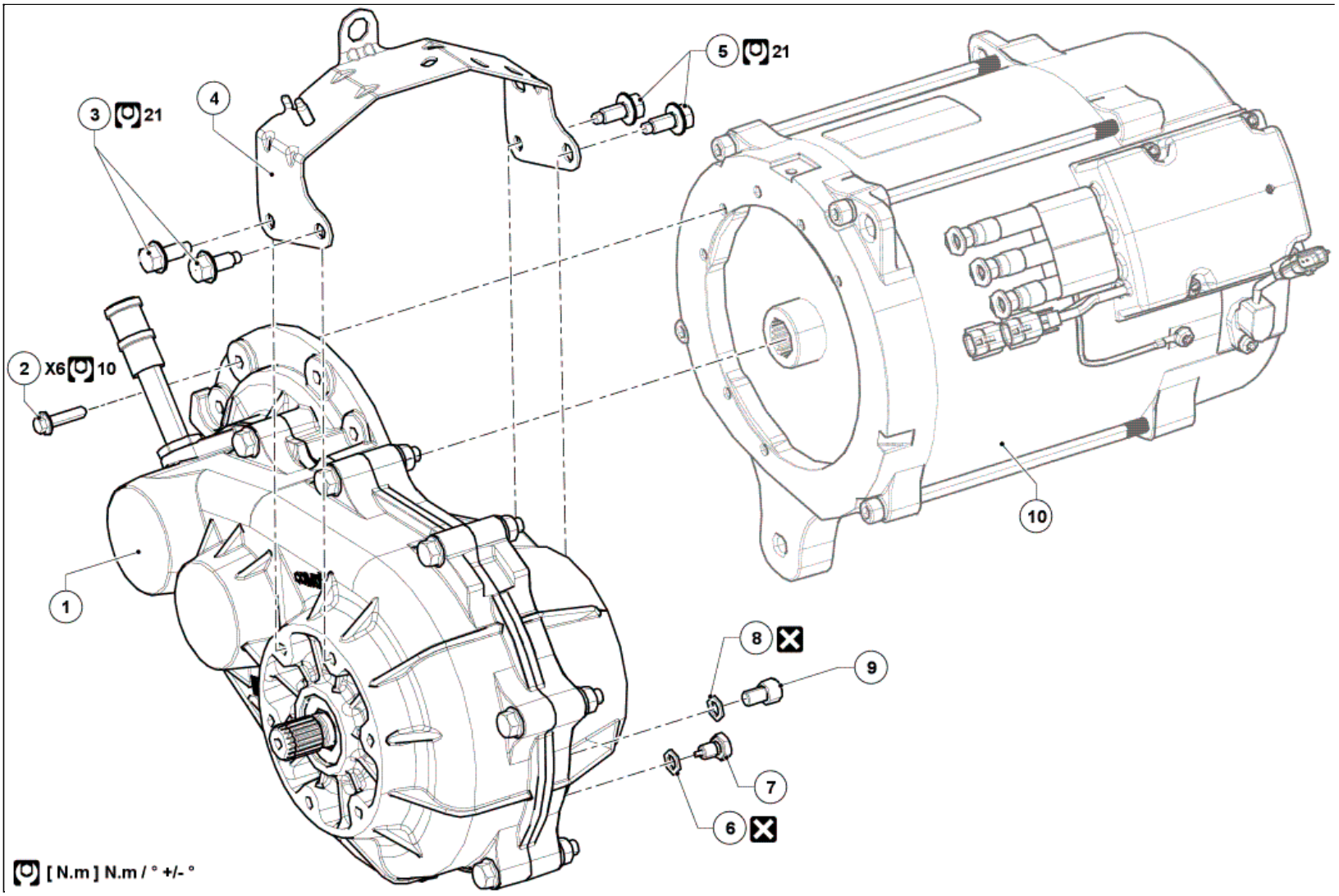

Illustration key: Description .

For fastenings with no specified tightening torque values, refer to the Table of Standard TorquesTightening torques: General information .

Marks	Designations	Informations
1	Reducer	(see)
2	Reducer bolts	
3	Lifting eye - wiring support bolts	
4	Lifting eye - wiring support	
5	Lifting eye - wiring support bolts	
6	Drain plug seal	
7	Drain plug	
8	Filler cap seal	
9	Filler cap	
10	Traction motor	Traction motor: Removal - Refitting

Repair-14x01x02-02x50-1-2-1.xml

XSL version : 3.02 du 22/07/11

ELECTRIC TRACTION REDUCTION GEARING DIFFERENTIAL : REMOVAL - REFITTING

Note, one or more warnings are present in this procedure

Equipment required
safety strap(s)
compressed air nozzle

WARNING

To avoid all risk of damage to the systems, apply the safety and cleanliness instructions and operation recommendations before carrying out any repair:

Vehicle: Precautions for the repair .

Location and specification (tightening torques, parts always to be replaced, etc.)Electric traction reduction gearing assembly: Exploded view .

REMOVAL

1. REMOVAL PREPARATION OPERATION

Position the vehicle on a two-post liftVehicle: Towing and lifting .

WARNING

DANGER: HIGH VOLTAGE VEHICLE.

Risks of serious burns or electric shock that may prove fatal.

Before carrying out any work on the vehicle, it is essential that you adhere to the instructions regarding vehicle voltage cut-off. This work must be carried out by an employee who is qualified and authorized to work on a high-voltage onboard network Vehicle: Precautions for the repair .

Remove:

- the lockout of the vehicle Vehicle: Lockout - Removal of lockout ,
- the rear wheels Wheel: Removal - Refitting ,
- the rear bumper trim Exterior body rear trim assembly: Exploded view .

Blow the traction motor and the reducer with a compressed air nozzle to prevent the introduction of foreign bodies in the motor.

Remove:

- the rear driveshaft Driveshaft assembly: Exploded view ,
- the "lifting eye - wiring support" on the reducer Electric traction reduction gearing assembly: Exploded view .

Strap the traction motor to the body with a safety strap(s).

Remove:

- the left-hand suspended engine mounting Engine-gearbox unit support assembly: Exploded view ,

- the reducer Electric traction reduction gearing assembly: Exploded view ,
- the input shaft lip seal Input shaft lip seal : Removal - Refitting ,
- the differential output seal Differential output seal : Removal - Refitting ,
- the mechanism housing (see 23C, Reduction gear, Mechanism housing : Removal - Refitting) .

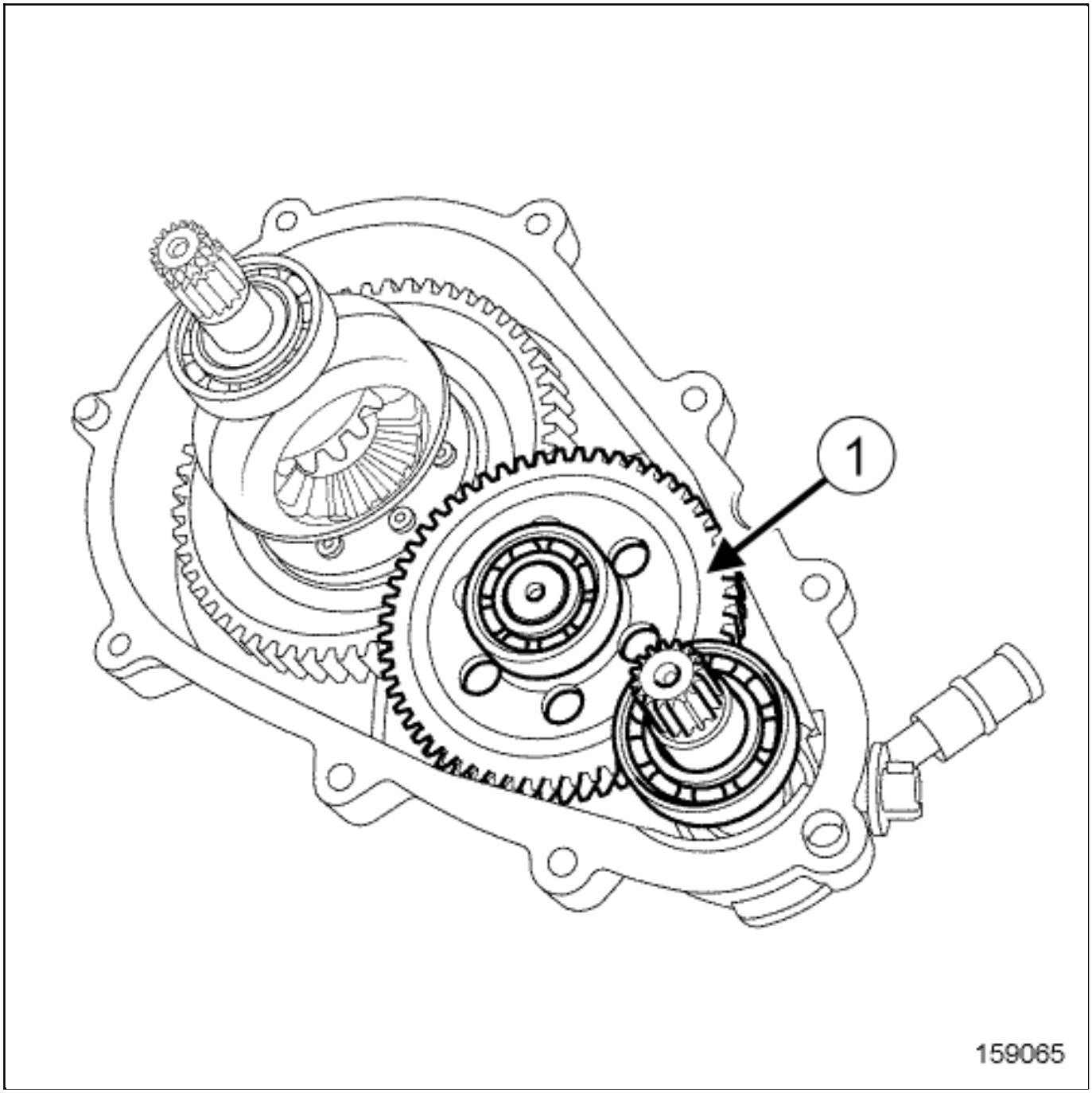

Remove the "input shaft - output shaft" assembly from the reducer(1) .

2. REMOVAL OPERATION

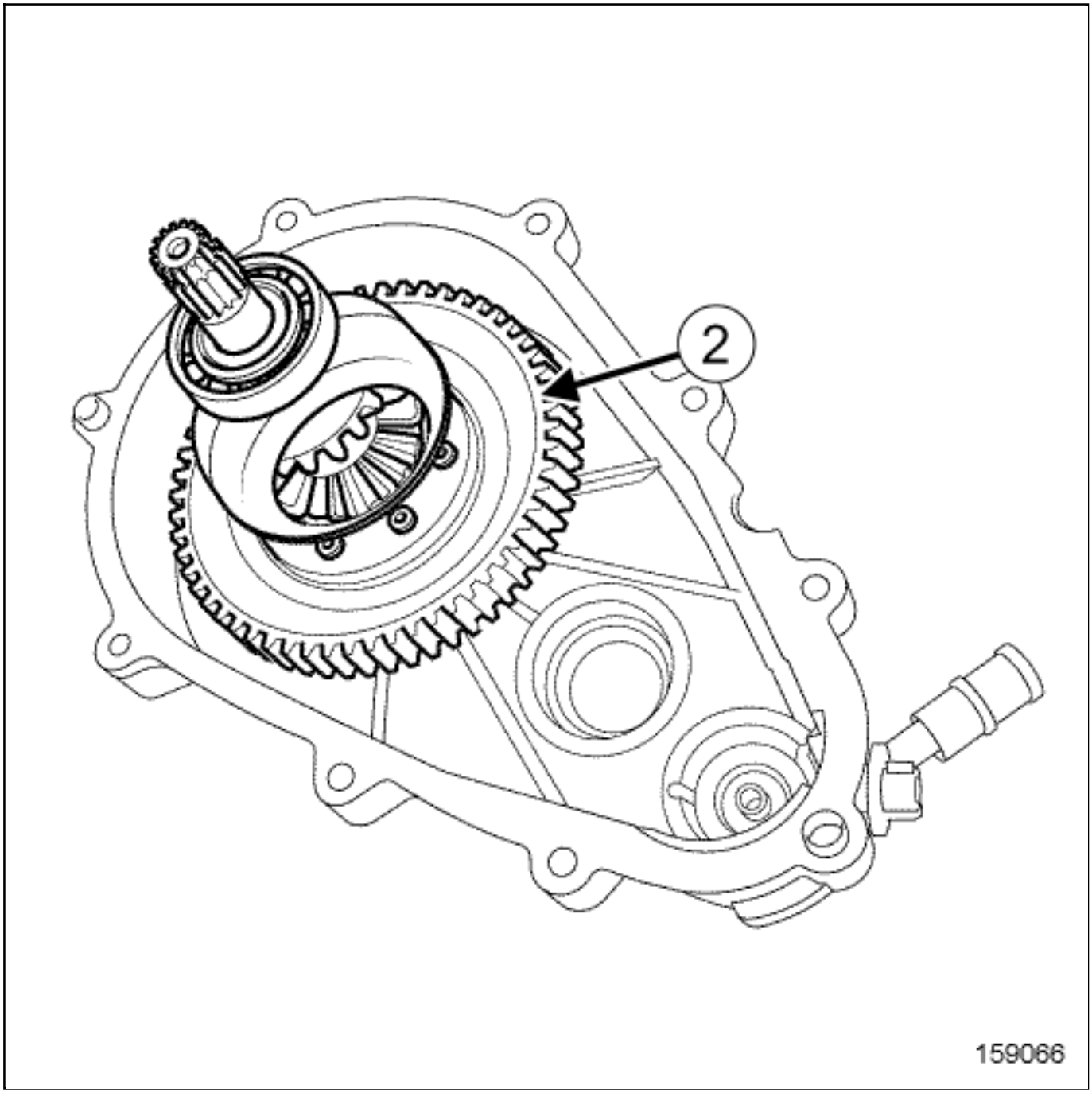

- Remove the electric traction reduction gearing differential(2) .

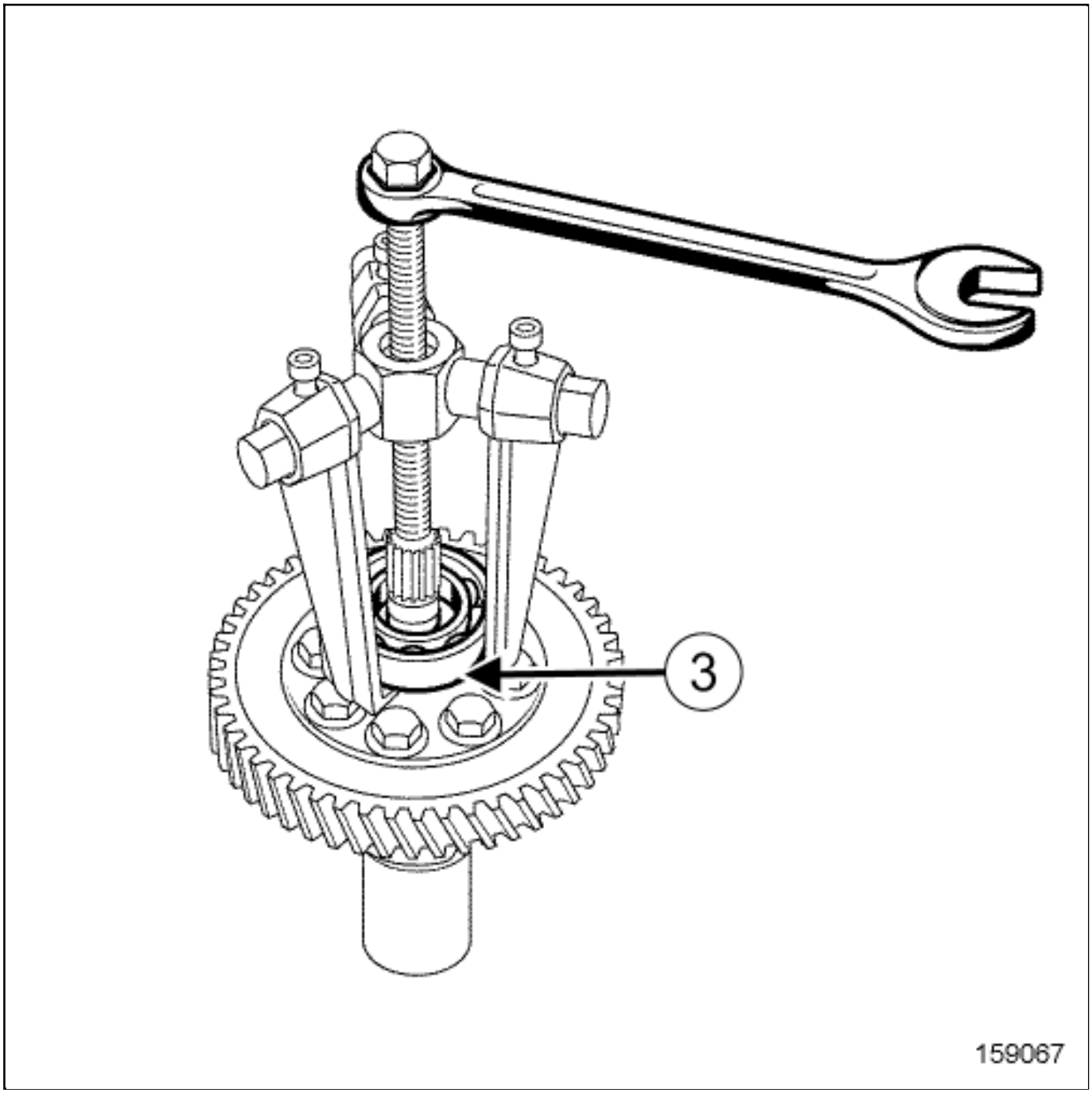

Remove the bearing left side(3) with an extractor.

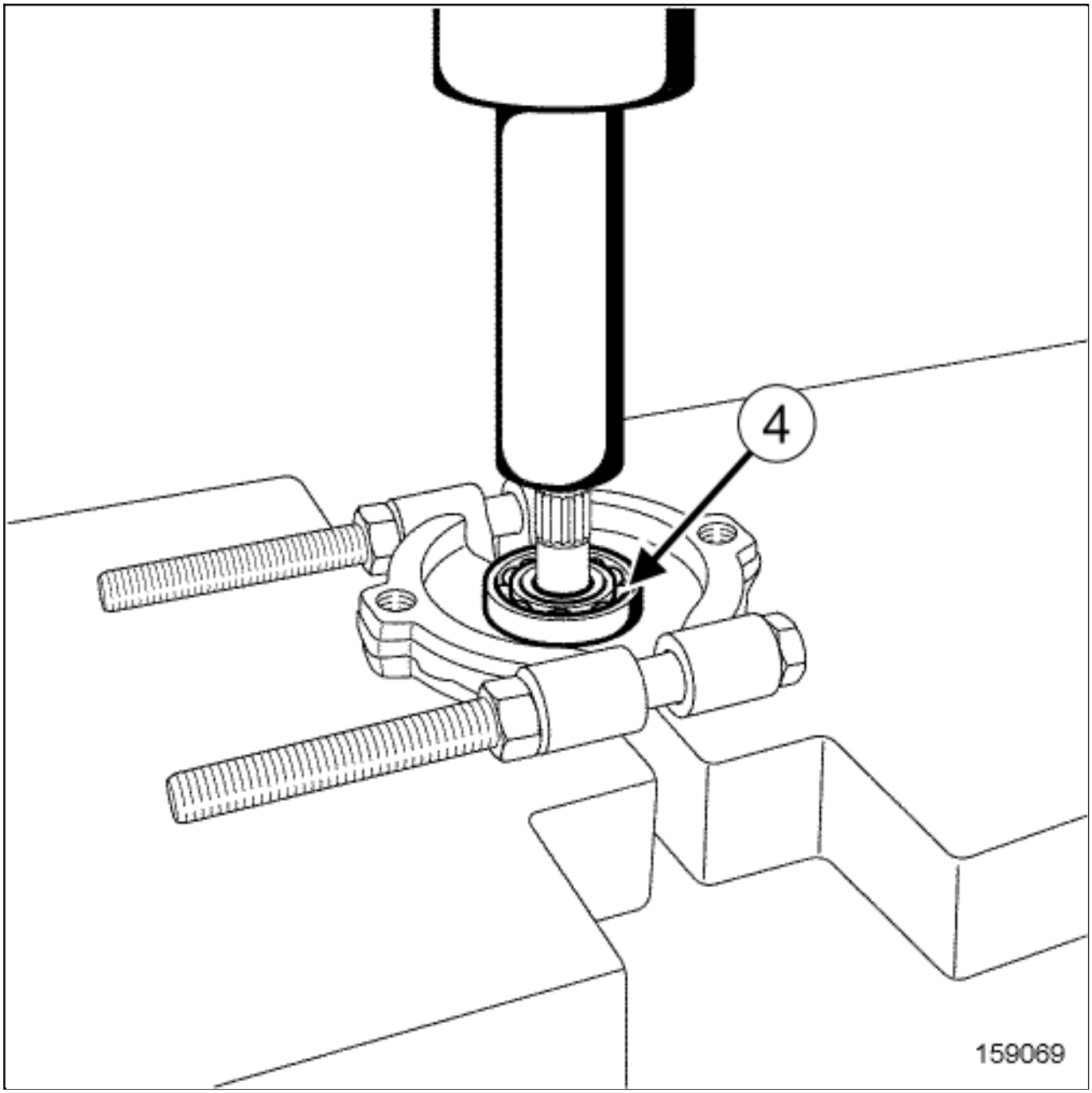

Remove the bearing right side(4) with a press, applying pressure with a tube.

REFITTING

1. REFITTING PREPARATION OPERATION

Use surface cleanerVehicle: Parts and consumables for the repair to clean:

- the internal and external surfaces of the bearing, in contact with the electric traction reduction gearing differential,
- the electric traction reduction gearing differential surfaces in contact with the bearing.

CAUTION

Do not press the bearing's internal bush so as to avoid damaging the bearing (very high shrink-fitting force).

Replace any component whose contact surfaces have deep scratches or cracks.

2. REFITTING OPERATION

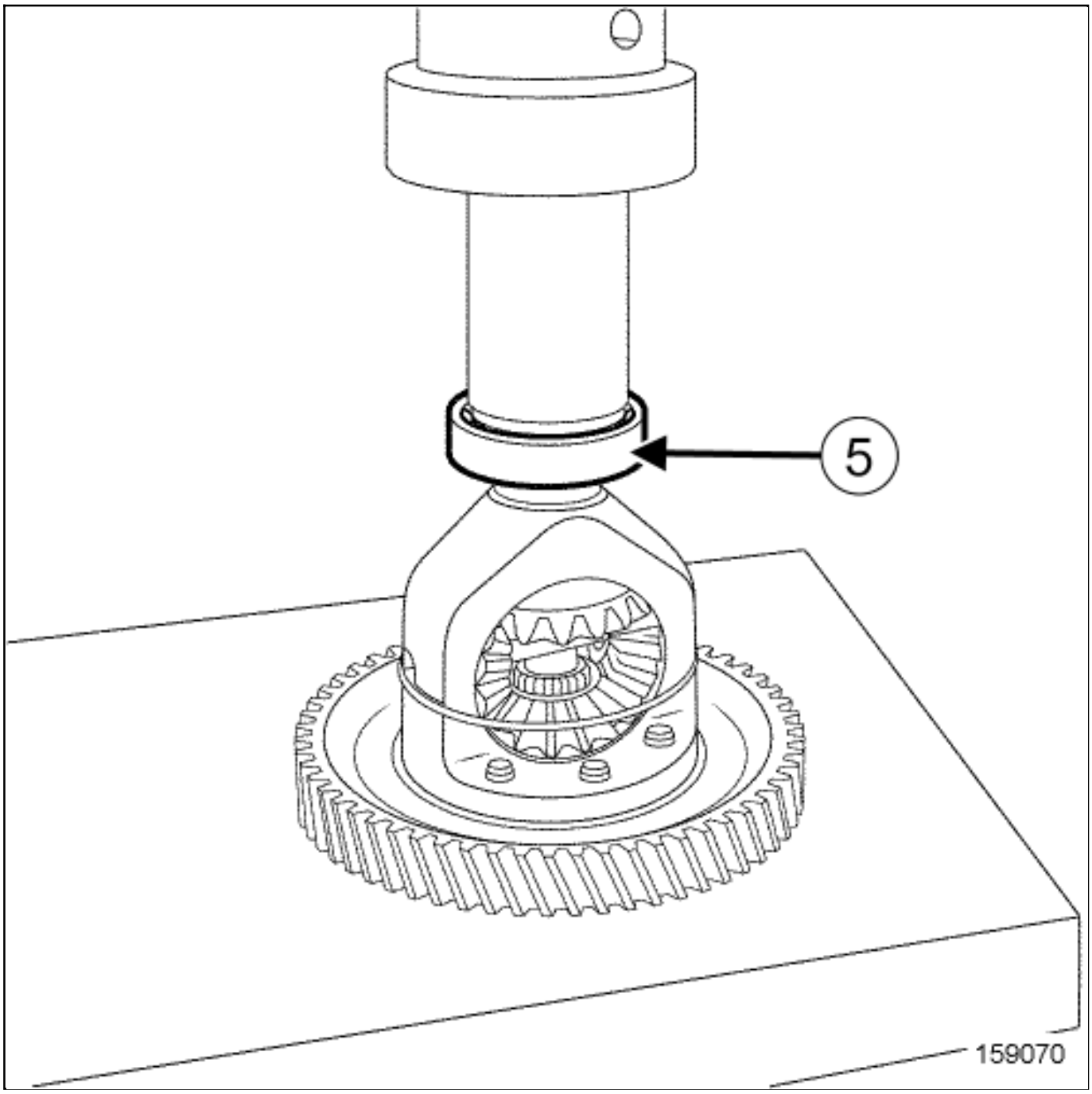
5
159070

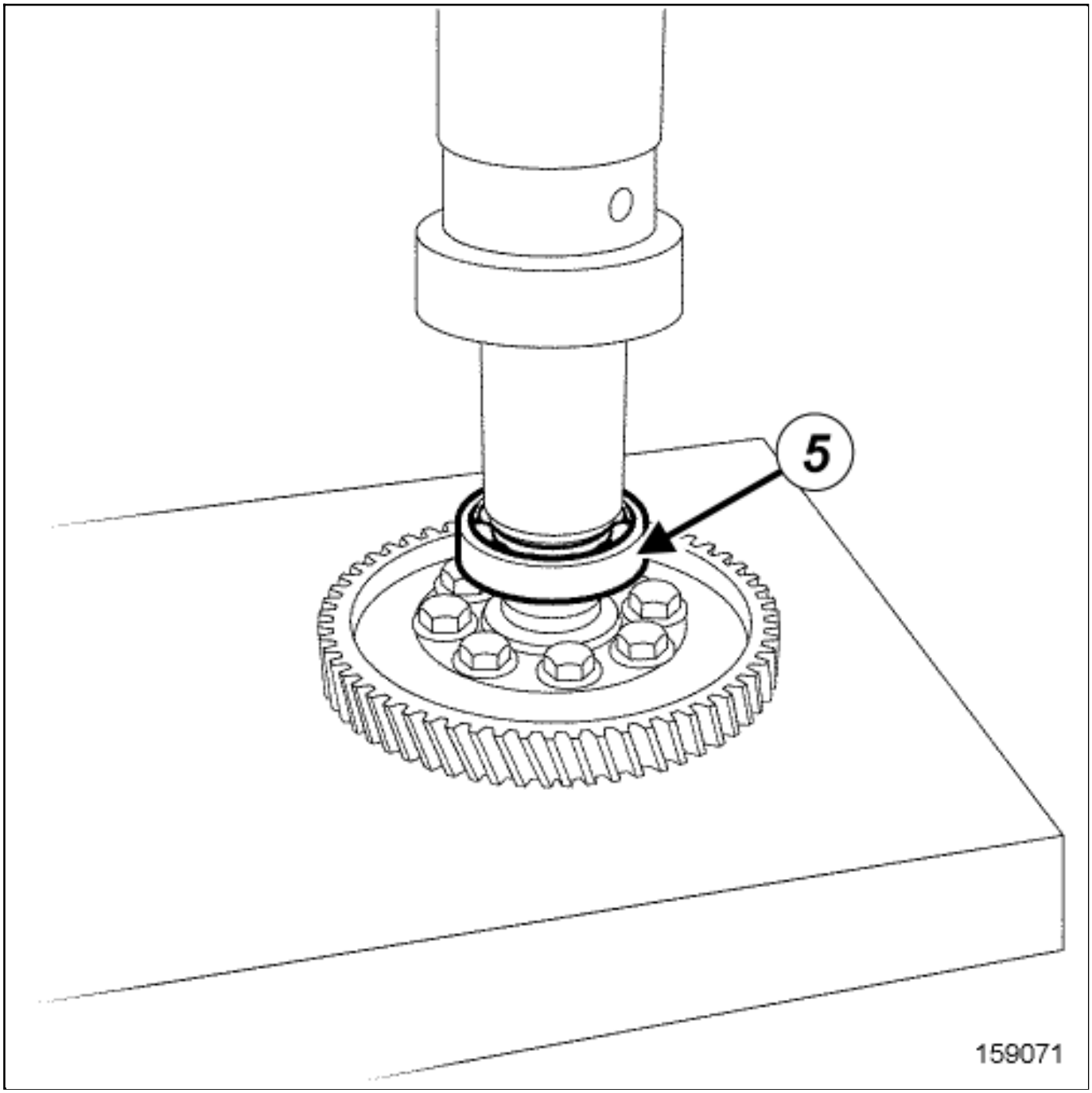

Refit the bearings(5) with a press, applying pressure with a tube.

3. FINAL OPERATION

Proceed in the reverse order to removal.

XSL version : 3.02 du 22/07/11

ELECTRICTRACTIONREDUCTIONGEARINGOILS :SPECIFICATIONS

1. OIL REDUCER:

	TYPE OF OIL FOR REDUCTION GEARING
5AM XXX	TRANSELF TRX 75W80 or TRANSELF NFP 75W80
RB0	TRANSELF TRX 75W80 or TRANSELF NFP 75W80
RAX	TRANSELF TRX 75W80 or TRANSELF NFP 75W80

2. STANDARD AND PART NUMBER OF THE OIL:

DESIGNATION	STANDARD	PART NUMBER
TRANSELF TRX 75W80 or TRANSELF NFP 75W80	APIGL4 MIL-L-2105 C or D	7711573523 (5 litres)

Repair-14x01x05x11-02x08-1-1-1.xml

XSL version : 3.02 du 22/07/11

ELECTRIC TRACTION REDUCTION GEARING : DRAINING - FILLING

Equipment required
oil recovery tray

Gearbox type	Capacity (liter)
RB0	1.05 litre

1. PARTS AND CONSUMABLES FOR THE REPAIR

- Part for repair:
  - the manual electric traction gearing drain plug seal.
- Consumables for repair:
  - electric traction gearing oil(see **Manual gearbox oil: Specifications**) .

2. DRAINING OPERATION

- Position the vehicle on a two-post lift Vehicle: Towing and lifting .
- Remove:
  - the engine undertray bolts,
  - the engine undertray.
- Position the oil recovery tray under the electric traction gearing.

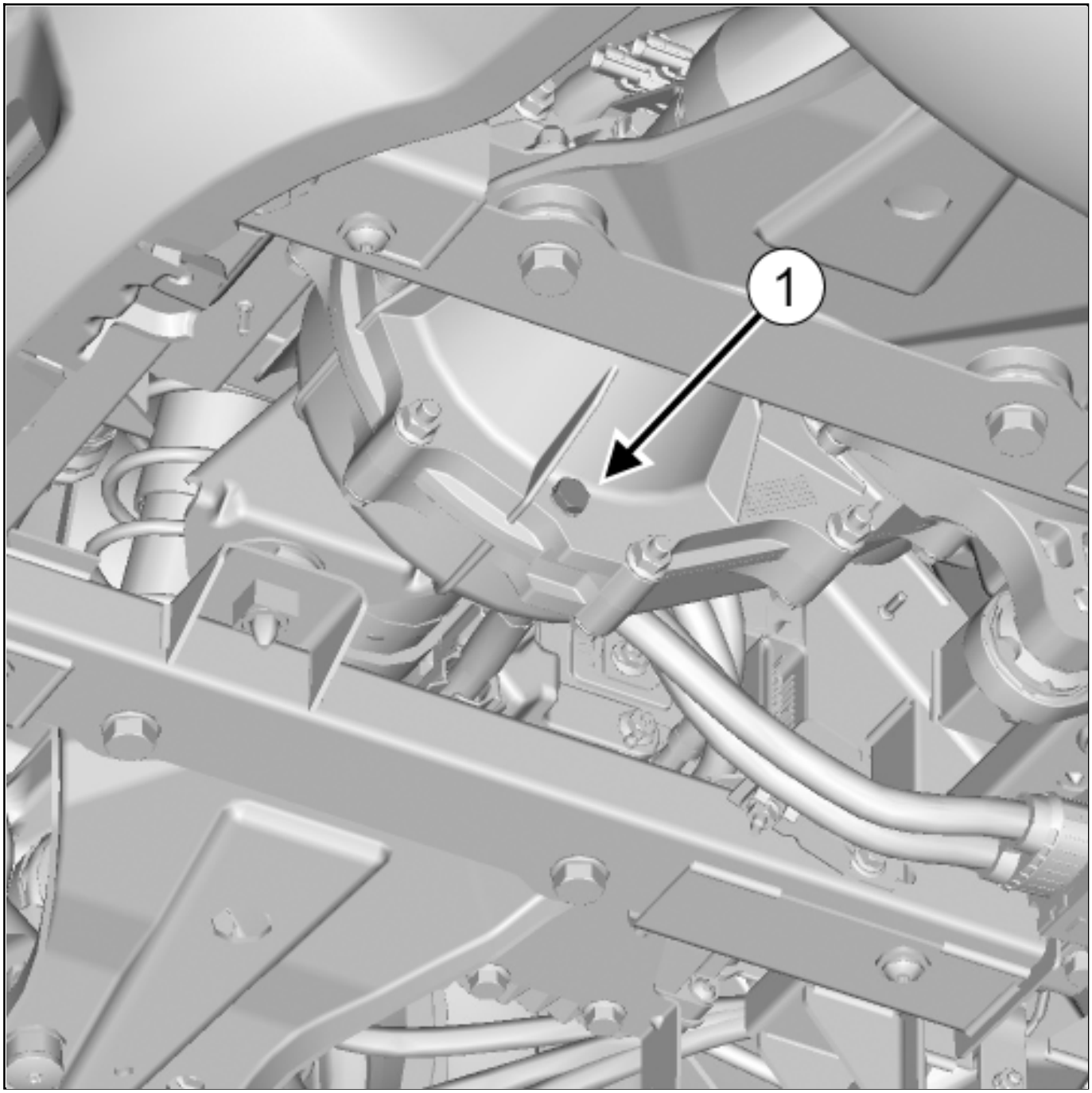

- Remove the drain plug(1) .

- Let the oil flow out of the electric traction gearing in the oil recovery tray.

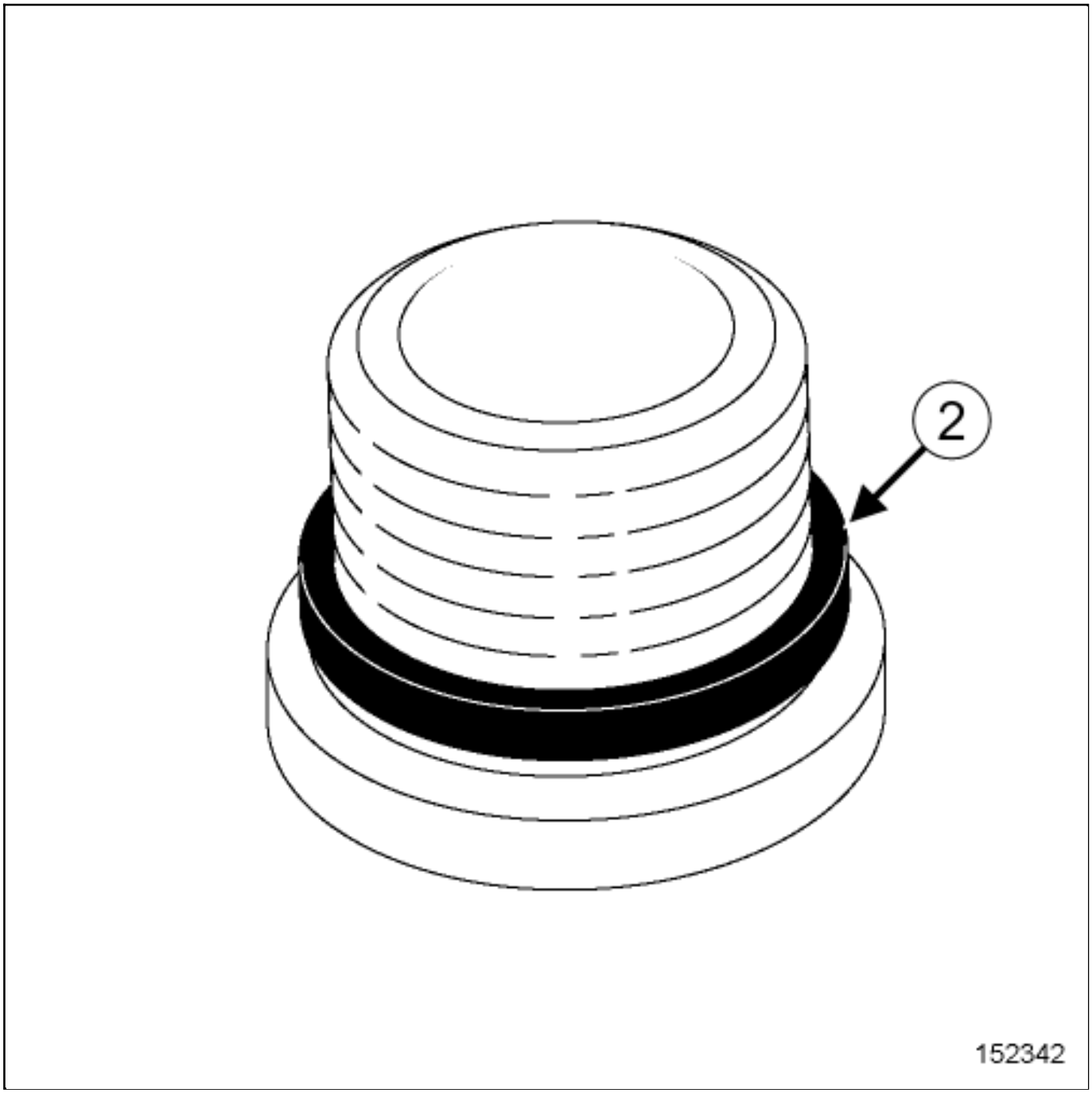

- Refit a new seal on the drain plug(2) .
- Refit the drain plug fitted with its new seal.
- Torque tighten the drain plug13N.m .

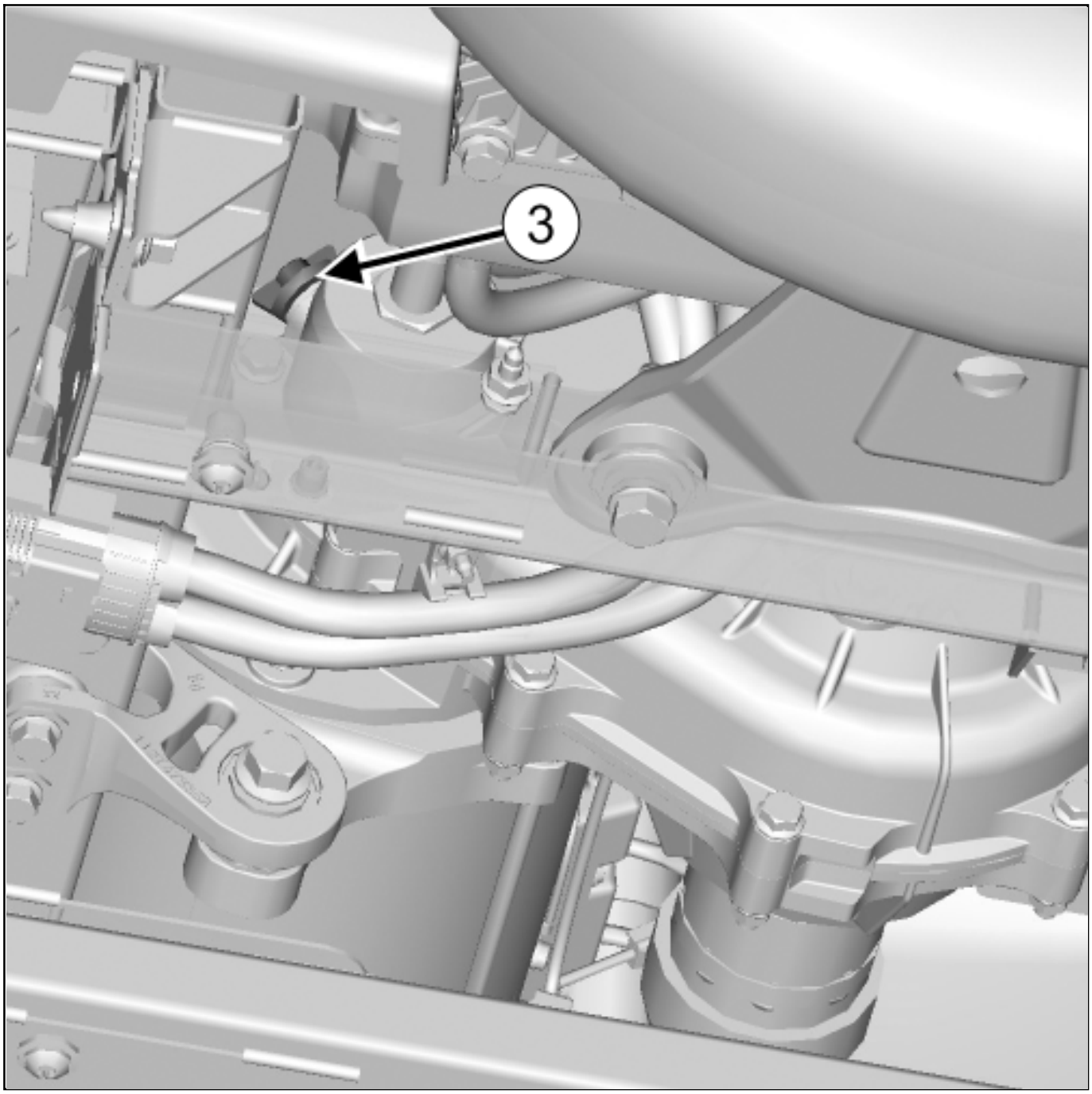

❑

Undo the filler cap(3) .

❑

Fill the electric traction gearing using a syringe containing recommended oilElectric traction reduction gearing oils : Specifications until the oil overflows out of the filler cap hole.

❑

Refit the filler cap.

- Wipe any oil run-off with a cloth.

- Remove the oil recovery tray.

- Refit the engine undertray.

Repair-14x01x05-01x73-1-2-1.xml

XSL version : 3.02 du 22/07/11

ELECTRICVEHICLEAUTHORISATION :DESCRIPTION

What is accreditation?

The employer is duty bound to train his employees in the prevention of electrical risks for professional activities where this risk is present.

The purpose of this training is to acquire a level of professional competency in the area of electrical safety.

At the end of this training, the employer must issue each person under his authority with competency clearance when carrying out electrical or non-electrical operations requiring accreditation.

This accreditation is not directly linked to a professional qualification. It must be represented by a document created by the employer, and signed by the employer and the competent person.

This accreditation is represented by a personal accreditation certificate that must always be carried by the holder when carrying out professional activities.

In the special case of staff provided by temporary employment agencies, this accreditation must be issued by the director of the company who is using this staff after ascertaining that all necessary conditions are met and that any additional practical training is provided in relation to the specific risks at the host site.

A self-employed person or employer taking part in an operation has no accreditation, but must provide proof of training and knowledge of the electrical risks.

The fact that the employer has issued accreditation does not relieve the holder of liability.

In order to be accredited by the management, the holder is required to attend an initial training course to verify that staff have received the instructions for working in complete safety and have the technical ability required to perform their job. These courses are to be delivered regularly via training updates.

A training certificate is issued at the end of the training course. The trainee keeps the original copy. A copy will be given to your manager when the final accreditation certificate is requested.

Note:

This is the employer's recognition of a person's ability to safely carry out set tasks.

1. LEGISLATIVE DEFINITION

1- SITUATION WHERE ACCREDITATION IS COMPULSORY

❑ Accreditation is compulsory in order to:

- carry out functions as the person "responsible for" operations on or in the vicinity of electrical equipment and installations,
- oversee operations on or in the vicinity of electrical equipment and installations,
- gain unsupervised access to premises and areas reserved for electricians,
- make the vehicle safe in order to work without any live voltage (lockout/removal of lockout procedures).

2- ASSESSMENT OF INITIAL TRAINING NEEDS

Aside from accreditation, an assessment of initial training needs must be conducted by the employer for all employees potentially exposed to electrical hazards, and specifically people who are entrusted with carrying out operations.

When accreditation is required, this must be determined by analysing the following parameters in order to obtain an appropriate balance between the type of operation likely to be entrusted to the person and the accreditation provided.

❑ This analysis takes account of:

- the type of operation to be performed (for example: workmanship and low voltage operations),
- the type and specifications of the work, installations and equipment,
- the voltage field (extra low voltage, low voltage, high voltage, etc.),
- the type of current (alternating or direct),
- the ability of the person to carry out the work.

The analysis process is identical and applicable even in the situation where simple training without accreditation is required.

3- CONDITIONS FOR ISSUING ACCREDITATION

Before issuing accreditation to a person under his/her authority, the employer must ensure that all the requirements in terms of electrical safety, training received and ability of the person to carry out the operations entrusted are appropriate.

❑ To do this, the employer must consider the following, according to the operations to be carried out:

- the type of work or installation concerned,
- the location of the work or installations,
- the type of electrical work or non-electrical work authorised,
- the voltage limits.

❑ He/she must also consider the following for the person to be accredited:

- his technical skills,
- knowledge of the work, installation or equipment,
- knowledge of the precautions to take in order to avoid electrical accidents,
- any medical restrictions,
- the compatibility of his/her conduct with carrying out the operations in complete safety.

❑ Respecting the above conditions enables the employer to issue accreditation to a person under their authority after having checked that:

- the accreditation symbols recommended by the organisation issuing the training are consistent with the operations he/she wishes to entrust to the accredited person and are authorised by the competency certificate,
- the field of application of accreditation is appropriately defined and in particular, there is no risk of the holder being put in a situation for which he/she has not received the correct training.

4- MONITORING THE LEVEL OF COMPETENCY

❑ Competency must be reviewed at least once a year and whenever it proves necessary based on changes to the individual's work context, particularly in the following cases:

- change of accredited person with change of accreditation certificate signatory,
- change of function,
- long periods of time not carrying out operations; an interval of around six months, for example,
- change in medical capacity for work,
- observation of a failure to adhere to the rules governing the operations,
- major changes to works or installations (equipment or structural changes) and particularly when the nature of the causes of danger and the levels of risk change,
- changes to work methods.

After this assessment, the accreditation is maintained, modified or suspended. If training requirements are expressed or observed, they must be satisfied by means of a refresher course or additional training.

In the case of a change of accreditation signatory, the employer must take action to ensure that the accreditation remains valid: be aware of the accreditations in force, check their issuing conditions and their relevance and make any necessary adjustments.

In the case of accreditation to perform work under voltage, the provisions of this paragraph concerning monitoring are supplemented by specific provisions.

5- MAINTAINING THE LEVEL OF COMPETENCY - REFRESHER TRAINING

❑ Refresher courses should be offered according to the interval specified by the employer and the work performed:

- complexity or frequency of operations,
- technological changes to equipment,
- diversity of work and installations.

The recommended frequency is 3 years. This corresponds to the accreditation validity period.

It is the employer's responsibility to define this refresher training after having assessed the skills of the staff on a theoretical level and practical level (questionnaire, discussion, practical test, specialist software, etc.), on the basis of the knowledge and expertise required.

The refresher training can only be undertaken and validated after accreditation has been acquired beforehand on the same topic.

In the case of accreditation to perform work under voltage, the provisions of this paragraph concerning

the maintenance of skills are supplemented by specific provisions.

6- THRESHOLD STANDARD FOR VOLTAGE

The standards specify the levels of voltage as follows:

voltage ranges		alternating current	smoothed direct current
Extra low voltage (ELV range)		Un <= 50 V	Un <= 120 V
Low voltage (LV range)	A field	50 < Un <= 500 V	120 < Un <= 750 V
	B field	500 < Un <= 1 000 V	750 < Un <= 1 500 V
High voltage (HV range)	A field	1000 < Un <= 5 000 V	1 500 < Un <= 7 500 V
	B field	Un > 50 000 V	Un > 75 000 V

The voltage levels in an electric vehicle cover the Extra Low Voltage and Low Voltage field as alternating and direct current.

7- JOB DEFINITIONS

The standards specify the level of competency accreditation as follows:

B0	B1	B2	BC
Experienced, non-electrical operative	Electrical operative	Works supervisor/Safety technician	Lockout technician

B0 - Experienced, non-electrical operative

Person whose activity is not related to an operation on the electrical circuit of the electric vehicle. This person must be sufficiently informed to protect himself against the electrical dangers and hazards in

carrying out his activity.

This includes, for example, mechanics, Renault minute employees, people involved in the vehicle handover, bodywork technicians and paintwork technicians.

B1 - Electrical operative

❑ Person appointed by his/her employer to carry out work by fulfilling a written order (repair order signed by the customer and issued by the team manager). Such work may be:

- electrical: the person carrying out the work must then possess the relevant electrician's qualification for the work to be done,
- non-electrical: the person carrying out the work may or may not be an electrician.

B2 - Works supervisor / Safety technician

Person appointed by his/her employer, performing a written order (repair order signed by the customer and issued by the team manager), to ensure that the work is managed effectively and to implement safety measures.

This includes, for example, workshop managers and electric vehicle specialists.

BC - Lockout technician

Person appointed by his/her employer to ensure that an electric vehicle is made electrically safe.

This includes, for example, unit managers, electric vehicle specialists and RTEs.

❑ Definition of operation levels:

- V: indicates that the person may work in the vicinity of an electrical component(removal/refitting of the traction battery comes under this category).
- L : specifies operations on an electric vehicle.
- T: indicates that the title holder may do electrical live working.

2. RENAULT DEFINITIONS

1- DEFINITION OF "JOB"

To simplify the risk and analysis procedures, three levels of training in electrical accreditation have been defined by RENAULT SAS and these are applicable to all electric vehicles.

RENAULT has specified three levels of accreditation worldwide as follows:

Equivalent to B0	Equivalent to B1	Equivalent to B2	Equivalent to BCL
BLUE AREA Level 0 authorisation	Not used at RENAULT	ORANGE AREA Level 1 authorisation	ORANGE AREA Level 1 authorisation

- There is a special training level; RED AREA level 2 authorisation. This enables the member of staff to:
  - handle the traction battery once it has been removed from the vehicle,
  - make the traction battery safe,
  - and perform repairs or recycling.

This training is not designed to be rolled out in all dealerships. Only specialised workshops that carry out traction battery repairs will have this type of staff member.

Special accreditations
RED AREA Level 2 authorisation

2- DEFINITION OF "WORK AREA"

To define or redefine the level of accreditation of the member of staff, it is necessary to identify the regular and occasional tasks that they perform and the conditions under which they perform them.

Three work areas are defined:

- The BLUE area:

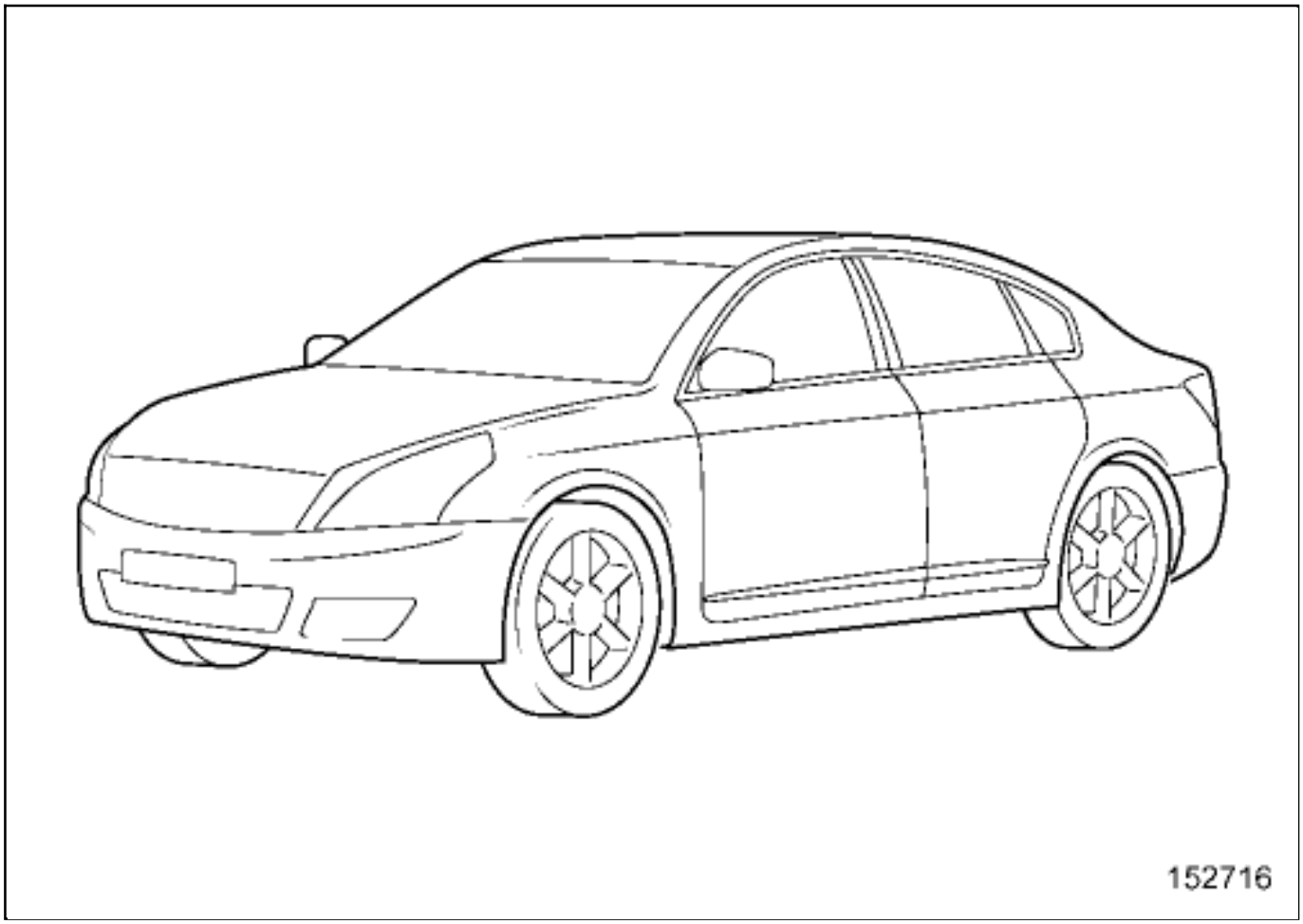

This is the entire vehicle excluding all the components supplied by the traction battery (electric powertrain, traction battery, air conditioning compressor, electric heating, etc.).

The vehicle is compliant, with no faults displayed on the instrument panel or diagnostic tools with no access to hazardous areas, is stationary, with the ignition switched off, and no electric charging in progress.

- The ORANGE area:

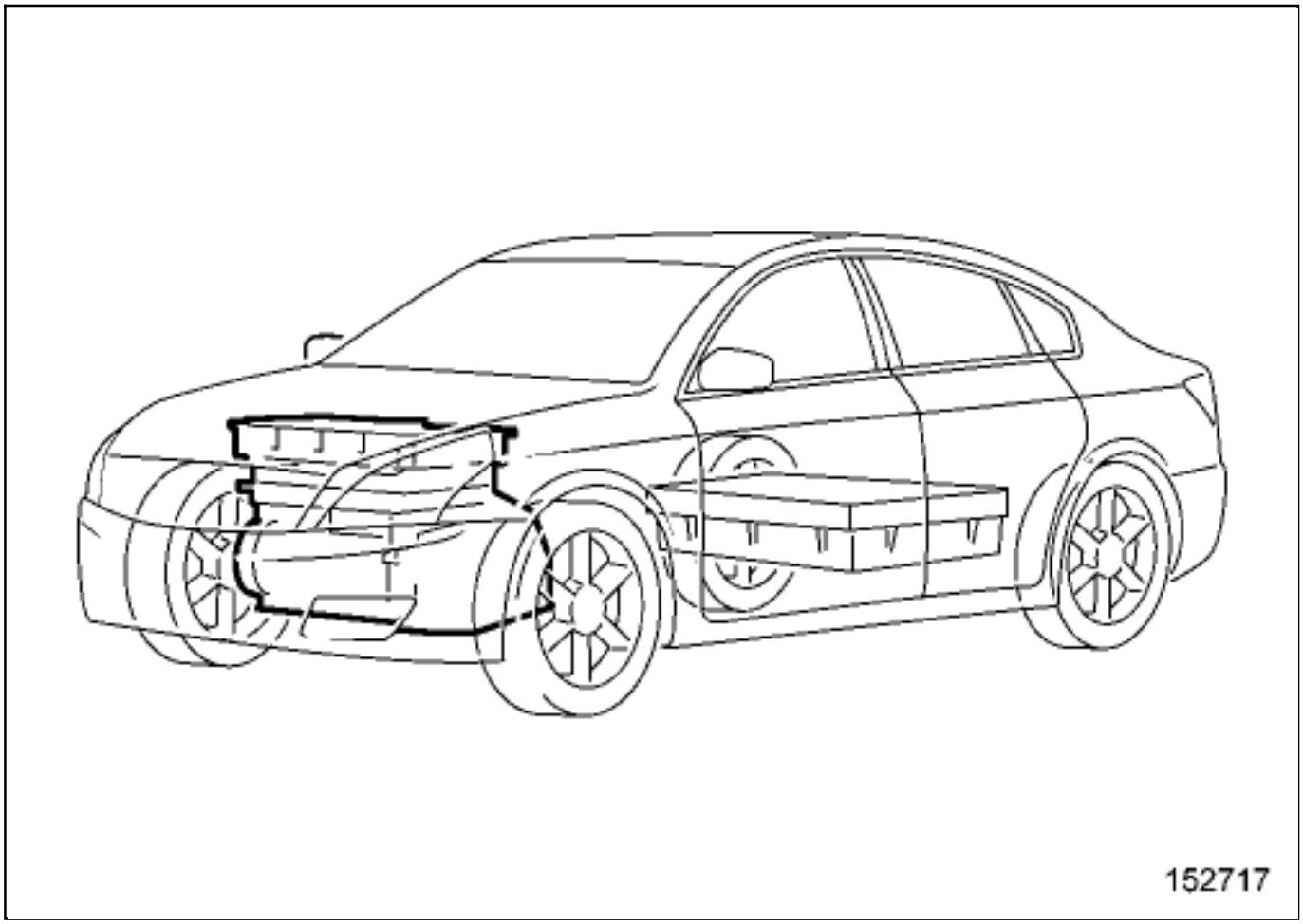

This is the full traction chain including the traction battery, the electric motor and transmission assembly, the heating resistor units and the air conditioning compressor, etc., which are supplied by the energy from the traction battery.

Voltage may be present on these components.

The vehicle must be disconnected and locked out using the lockout/removal of lockout procedures before any operation can be performed.

Level 1 electrical accreditation (B2VL, BCL) is mandatory.

- The RED area:

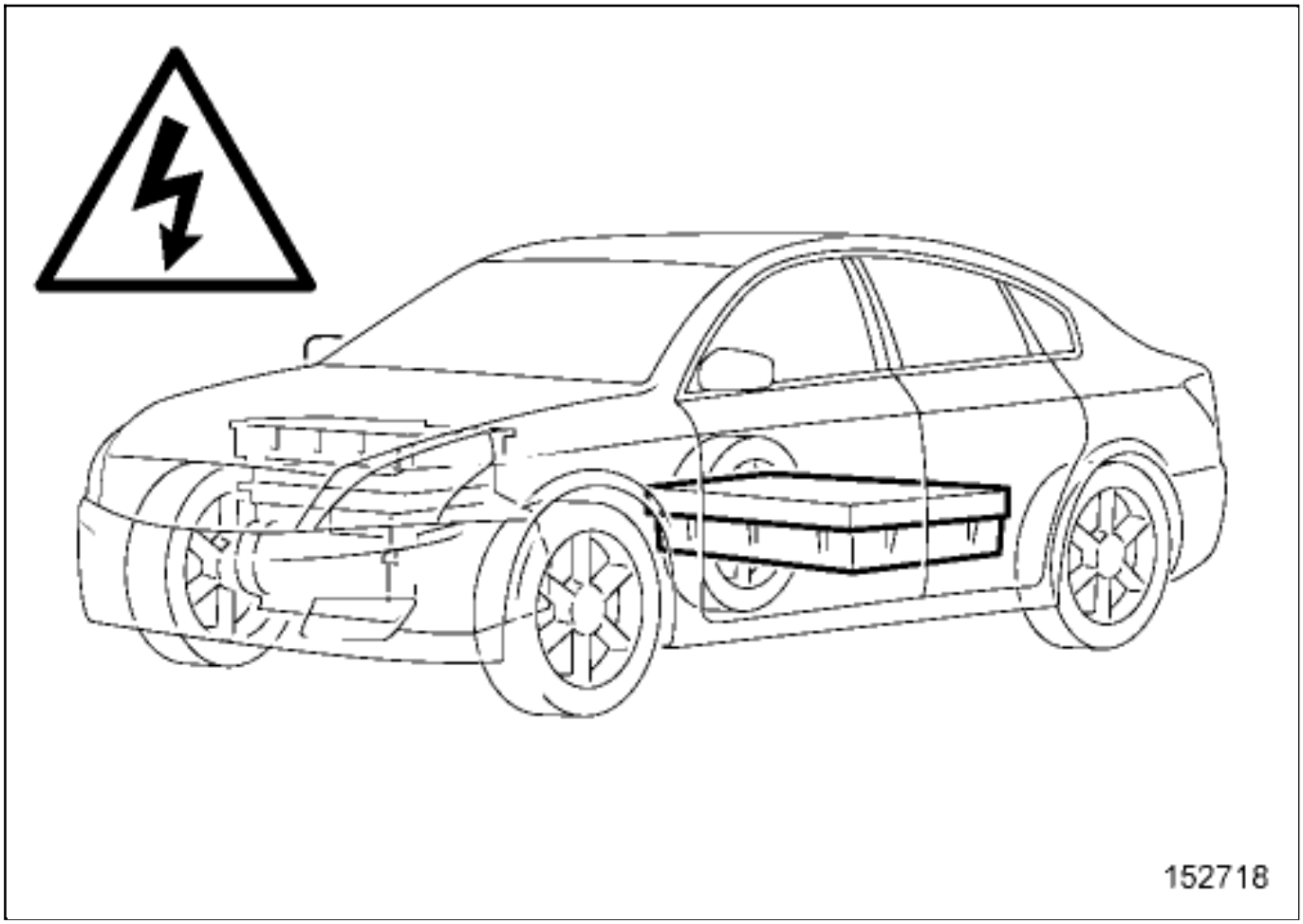

This is the entire internal area of the traction battery. There is voltage running through the traction battery internal components. Work is performed under voltage.

The company rule is to try to reduce, as quickly as possible, the voltage to less than 60 V and to have dry skin, in order to prevent the risk of electric shock and electrocution during diagnostics, repair and dismantling operations.

3- DEFINITION OF ACCREDITATION

To define or redefine the individual's current level of accreditation, it is necessary to identify the regular and occasional tasks that he/she performs and the conditions under which he/she performs them.

All the job function safety trainings or accreditation according to the operation level is mandatory.

1)NO SPECIFIC ELECTRICAL ACCREDITATION

When there are no electric vehicles to work on in the country, there is no specific training to be put in place.

Tasks performed	Level required
He sells combustion engine vehicles	-
He drives company combustion engine vehicles	-
He performs work on combustion engine vehicles	-
...	

2)LEVEL 0 ACCREDITATION – BLUE AREA TRAINING – "EXPERIENCED, NON-ELECTRICAL OPERATIVE"

This training is applicable to persons using an electric vehicle in the company and working in the vicinity or on components with no live electric voltage.

Staff who have received this training cannot perform work on components supplied by the traction battery.

Its aim is to explain to the individual the risks linked to working in the vicinity of components in the traction chain, the safety of staff and the obligation to report all faults that are observed.

It will be included in the job safety training.

An INSTRUCTED PERSONis a person who has been sufficiently informed by qualified persons to avoid electrical dangers.

Below is a table of tasks that can be referred to in order to help in decision-making.

Tasks performed	Level required
He sells electric vehicles.	B0L – level 0 authorisation - BLUE area
He drives company electric vehicles.	B0L – level 0 authorisation - BLUE area
He/she prepares new and used vehicles for sale.	B0L – level 0 authorisation - BLUE area
He carries out mechanical work, not including the traction chain, on an electric vehicle. (Suspension components, braking components, lights, etc.).	B0L – level 0 authorisation - BLUE area
He/she carries out work on the body, excluding the "vehicle to be locked out" scope on the traction battery of an electric vehicle. (minor repairs, repairs on locked out vehicles under the supervision of the person nominated as the "works supervisor/safety technician", etc.).	B0L – level 0 authorisation - BLUE area
He/she carries out paintwork on the electric vehicle, excluding the "vehicle to be locked out" scope on the traction battery of an electric vehicle. (minor repairs, repairs on locked out vehicles under the supervision of the person nominated as the "works supervisor/safety technician", etc.).	B0L – level 0 authorisation - BLUE area

3)LEVEL 1 ACCREDITATION – ORANGE AREA TRAINING – "WORKS SUPERVISOR/SAFETY TECHNICIAN AND/OR LOCKOUT TECHNICIAN"

What is level 1 - ORANGE area accreditation?

This training is designed for staff that perform maintenance or recovery work on an electric vehicle on components supplied by the traction battery.

- There are two types of staff:

- The LOCKOUT TECHNICIAN, capable of making an electric vehicle safe,
- The Z.E. SPECIALIST, capable of performing fault finding and repairs on components supplied by the traction battery. The Z.E. SPECIALISTis also a LOCKOUT TECHNICIAN.

The work is carried out on switched off components.

For diagnostics reasons, the vehicle may be under live voltage.

For their own safety or to make the vehicle safe, this person is able to lock out the vehicle.

Orange level 1 employees have passed the previous training levels and can perform all blue level 0 operations.

These personnel shall be:

- a PERSON SKILLED IN ELECTRICITYhaving received training, with suitable knowledge and experience in electricity in order to enable them to analyse the electrical risks and avoid the dangers which electricity may present,
- a PERSON RESPONSIBLE FOR THE OPERATIONqualified, accredited and nominated by their employer. They must take the necessary measures to ensure their own safety and the safety of any person carrying out the work under their supervision,
- The WORKS SUPERVISOR/SAFETY TECHNICIANis the person responsible for managing electrical and non-electrical work.

Qualified "LOCKOUT TECHNICIAN"

The ELECTRICAL LOCKOUT TECHNICIANis the person responsible for performing the electrical lockout/removal of lockout procedures or having them performed.

A BCL-LOCKOUT TECHNICIAN accreditation symbol does not lead to the allocation of other types of accreditation and vice-versa.

He/she does not repair electrical components supplied by the traction battery.

Tasks perfomed	Level required
He/she electrically disconnects the electric vehicle either fully or partially and performs the lockout/removal of lockout procedures.	BCL - level 1 authorisation - ORANGE area
He/she performs simple insulation checks related to making the vehicle safe.	B2VL - level 1 authorisation - ORANGE area
He/she works near to exposed lived parts whilst making the vehicle electrically safe.	B2VL - level 1 authorisation - ORANGE area

Qualified "Z.E. SPECIALIST"

He/she repairs all control or power electrical components (14 V and above) after locking out the electric vehicle.

He/she is a qualified lockout technician operations supervisor.

Tasks perfomed	Level required
He assembles or modifies electric or electrotechnical circuits on electric vehicles.	B2VL - level 1 authorisation - ORANGE area
He uses test benches.	B2VL - level 1 authorisation - ORANGE area
He uses an oscilloscope.	B2VL - level 1 authorisation - ORANGE area
He takes measurements, performs tests on circuits and electric and electrotechnical checks.	B2VL - level 1 authorisation - ORANGE area
He fits and removes measuring equipment.	B2VL - level 1 authorisation - ORANGE area
He carries out mechanical work on the traction chain on an electric vehicle.(Powertrain, battery, etc.).	B2VL - level 1 authorisation - ORANGE area

4)LEVEL 2 ACCREDITATION – RED AREA TRAINING – "TRACTION BATTERY REPAIRER QUALIFIED ELECTRICAL WORKER"

The technician performs work on the traction battery.

The conditions for working with low-voltage vehicles state that it is necessary to take certain steps before working on a DC voltage above 60 V or a capacity greater than 180 Ah.

Work is performed on live parts to perform measuring, diagnostics, repairs or to assemble components.

This work can only be performed in specially designed rooms.

A B2TL-TRACTION BATTERY REPAIRER accreditation symbol does not lead to the allocation of other

types of accreditation and vice-versa. A member of staff only trained to repair batteries does not have the pre-requisites to work on an electric vehicle.

Work on live parts is authorised when the nature of the operations means that switching off the electrical supply is dangerous or impossible. This work mainly concerns electrical energy storage systems. Live work on on-board electrical components on electric vehicles comes under the Extra Low Voltage and Low Voltage areas.

With traction batteries, when removing the module or cell, it is recommended to work at safety voltages below 60 V. It will therefore be necessary to disconnect certain modules in a stack in order to create groups of modules, the overall voltage of which does not exceed 60 V.

Due to the danger level on electric vehicles fitted with Extra Low Voltage systems and because of the current in the event of a short circuit, these risks need to be anticipated by applying the measures appropriate to the Low Voltage area.

Tasks perfomed	Level required
He performs assembling or modification on live electric on electrotechnic circuit or components.	B2TL - level 2 authorisation - RED area
He works on live electric circuits.	B2TL - level 2 authorisation - RED area

4- PROCESS FOR THE SUPPLY OF AN ACCREDITATION

The workshop manager, the personnel manager and the team leader analyse the training requirements depending on the work to be performed by the establishment.

They establish a training programme for staff who are going to use, perform diagnostics or repair an electric vehicle.

Below, you will find the summary of the programme necessary to be able to authorise a member of staff.

STEP 1: DEFINING THE NEED	
Question 1:	Does the member of staff have a use or work to perform on an electric vehicle?
	==> NO, Use of or work on an electric vehicle is not required; no electric vehicle training to be performed. The person is not authorised to use or work on an electric vehicle due to their contract. End of the procedure. ==> YES, Use of or work on an electric vehicle is required. Go to the next question or step.
Question 2:	Does the member of staff have a task identified by an electrical risk on a component supplied by the traction battery on an electric vehicle (for example: lockout of the traction battery to be performed during the operations to be carried out)?

	==> NO, He/she is not expected to work on a task identified by an electrical risk on a component supplied by the traction battery on an electric vehicle. Training – Level 0 - BLUE area: Electric safety job training is to be performed in accordance with the RENAULT ACADEMY reference guide. Upon completion of the training, the person may be level 0 - BLUE area accredited by their employer. ==> YES, He/she is expected to work on a task identified by an electrical risk on a component supplied by the traction battery on an electric vehicle. Go to the next question or step.

STEP 2: CHECKING TECHNICAL SKILLS	
Question 3:	Does the member of staff have an electrical qualification necessary to work on an electrical installation of an electric vehicle?
	==> NO, The person cannot perform electrical work. Requalify the authorised work with the member of staff; he/she cannot perform a task identified by an electrical risk on a component supplied by the traction battery on an electric vehicle. End of procedure. ==> YES, The person is suitable to perform electrical work. Go to the next question or step.

STEP 3: CHECKING MEDICAL FITNESS	
Question 4:	Is the member of staff medically fit to work on an electric vehicle type electrical installation?
	==> NO, The person cannot perform electrical work. Requalify the authorised work with the member of staff; he/she cannot perform a task identified by an electrical risk on a component supplied by the traction battery on an electric vehicle. End of procedure. ==> YES, the person is medically suitable to perform electrical work. Go to the next question or step.

STEP 4: DEFINING THE TYPE OF SAFETY TRAIN	
Question 5:	Is the member of staff going to: - perform the lockout/removal of lockout procedures on the traction battery, - perform diagnostics or electrical measurements in the vicinity of a bare live part or, - repair a component supplied by the traction battery?
	==> NO, The person does not perform lockout/removal of lockout procedures on the traction battery, does not perform diagnostics or electrical measurements in the vicinity of live bare parts or does not perform repairs on a component supplied by the traction battery. Go to the next question or step. ==> YES, The person performs lockout/removal of lockout procedures on the traction battery, performs diagnostics or electrical measurements in the vicinity of live bare parts or performs repairs on a component supplied by the traction battery. Training – Level 1 - ORANGE area: Electrical safety training in accordance with the RENAULT ACADEMY reference guide must be performed. Upon completion of the training, the person may be level 1 - ORANGE area accredited as LOCKOUT TECHNICIAN and/or Z.E. SPECIALIST by their employer. Go to the next question or step.
Question 6:	Is the member of staff going to work on internal repair operations on the traction battery?

	==> NO, The person does not work on traction battery internal repair operations. Go to the next question or step. ==> YES, The person works on traction battery internal repair operations. Training Level 2 - RED area: Electrical safety training in accordance with the RENAULT ACADEMY reference guide must be performed. Upon completion of the training, the person may be level 2 accreditated as TRACTION BATTERY REPAIRER by their employer. Go to the next question or step.

STEP 5: VALIDATION OF SKILLS	
Question 7:	Has the member of staff obtained these technical/medical fitness certificates and/or the training necessary for an electrical accreditation to be issued by their employer?
	==> NO, The person is not authorised to use or work on an electric vehicle due to the clauses in their contract. End of the procedure. ❑ ==> YES, ■ Check that all of the relevant training and medical certificates have been obtained, ■ File the training certificates in the blue level 0 section, ■ Fill in the "orange level 1 or red level 2 accreditation certificate" and have it signed by the manager, ■ Have, if necessary, the "electric vehicle" badge made by the competent bodies. ❑ The workshop manager or personnel must scan and archive the following: ■ the copy of the "B2x" training certificate, ■ the copy(ies) of the "vehicleX" training certificate, ■ the copy of the "FIT" medical fitness certificate, ■ the copy of the signed accreditation certificate. End of the procedure.

5- DECISION MAKING MATRIX FOR STAFF PROFILES

Only members of staff working on electric vehicles shall be trained.

It is the Z.E. SPECIALIST who works in the orange area with non-live electrical components in diagnostics and repairs.

This list is not exhaustive and gives an idea of the personnel likely to undergo accreditation training and define the nature of this training.

Profile	Job training Level 0 - BLUE area "Experienced, non-electrical operative"	Level 1 - ORANGE area "LOCKOUT TECHNICIAN" accreditation	Level 1 - ORANGE area "Z.E. SPECIALIST" accreditation	Level 2 - RED area "TRACTION BATTERY REPAIRER" accreditation
Seller	Blue area operation	-	-	-
NV/UV preparer	Blue area operation	-	-	-
Service advisor	Blue area operation	-	-	-
Painter	Blue area operation	-	-	-
Bodywork	Blue area operation	-	-	-
Mechanic	Blue area operation	-	-	-
Electro-mechanic	Blue area operation	-	-	-
RTE	Blue area operation	-	-	-
Workshop manager	Blue area operation	Lockout technician - operation in orange area	-	-

Assistance services personnel	Blue area operation	Lockout technician - operation in orange area If required: orange area operation for safety isolation check	-	-
CARTECH or bodywork manager	Blue area operation	Lockout technician - operation in orange area If required: orange area operation for safety isolation check	-	-
Z.E. Specialist	Blue area operation	Lockout technician - operation in orange area	Orange area operation Diagnostics and repair	-
Battery repair operative	-	-	-	Red area operation

6- VEHICLE REQUIRING A LOW VOLTAGE ACCREDITATION

Tasks performed	Level required
TWIZY (60 V traction battery)	B2VL BCL - Level 1 accreditation - ORANGE area
KANGOO Z.E, FLUENCE Z.E, ZOE (400 V traction battery)	B2VL BCL - Level 1 accreditation - ORANGE area
…	B2VL BCL - Level 1 accreditation - ORANGE area

3. MEDICAL

Note:

The employer must check the ability of a person to accomplish the set tasks safely.

The standards state that a check is performed to find out whether there is a medical contraindication required for working on electrical components.

The medical visit must be organised and completed before starting any training with a view to accreditation. This avoids unnecessary training costs in the event that a member of staff is not deemed fit for the work in question.

All members of staff must hold a fitness for work note for performing the allocated work, supplied by the occupational doctor as part of the regulatory visits.

For this, the occupational doctor shall be informed, if required, of the electrical tasks which the staff are to perform in order to adapt the medical examinations.

- When requesting the appointment, the line manager will provide information on the type of work performed by the member of staff:
  - The type of work planned (lockout technician, works supervisor/safety technician, battery repairer, etc.),
  - The type of voltage (Extra Low Voltage, Low Voltage, etc.),
  - The type of installation (electric vehicle, traction battery, etc.).

- During the examination, it is recommended to check for:
  - a heart contraindication (heart arrhythmia, presence of a pacemaker, etc.),
  - a contraindication linked to any problems seeing colours which would not enable them to distinguish power cables from other cables (daltonism),
  - a contraindication linked to motor coordination for persons who are going to be R, V, N or T (level 1 and level 2 accreditations) accredited,
  - a contraindication linked to the consumption of a substance which risks altering the perception of the working environment, placing the member of staff and others in danger.

Note:

The "Reference" values of each criterion to be met in order to define the aptitude of the candidate are analysed by an occupational doctor and are confidential.

=> It is the doctor who judges whether the person is fit or not.

Note:

At the end of the medical visit, a proof of fitness is given to the member of staff. The holder must keep the original and give a copy to their line manager when the final accreditation document request is made.

1- LEVEL 0 ACCREDITATION – BLUE AREA TRAINING – "EXPERIENCED, NON-ELECTRICAL OPERATIVE"

Medical visit and frequency according to position held.

2- LEVEL 1 ACCREDITATION – ORANGE AREA TRAINING – "WORKS SUPERVISOR/SAFETY TECHNICIAN AND/OR LOCKOUT TECHNICIAN"

In order to be accredited by his line management, he is requested to undertake a medical examination every 2 years at least.

A fitness certificate must be issued by the doctor and attached to the employee's file.

3- LEVEL 2 ACCREDITATION – RED AREA TRAINING – "TRACTION BATTERY REPAIRER QUALIFIED ELECTRICAL WORKER"

In order to be accredited by his line management, he is requested to undertake a medical examination every year at least.

A fitness certificate must be issued by the doctor and attached to the employee's file.

4. TRAINING

To be able to be accredited by line management, each employee is requested to undergo initial accreditation training in order to check that the member of staff has received the instructions to work safely and has the technical skills to perform his/her job.

Staff must regularly complete training sessions designed to update their knowledge, in order to certify that a member of staff has indeed received the work instructions and safety guidelines and that he/she has the technical skills to carry out his/her role.

All of these training courses are mandatory at all levels.

Note:

At the end of the training, a training certificate is given to the member of staff. The holder must keep the original and give a copy to their line manager when the final accreditation document request is made.

1- LEVEL 0 ACCREDITATION – BLUE AREA TRAINING – "EXPERIENCED, NON-ELECTRICAL OPERATIVE"

Level 0 - BLUE area accreditation level is obtained by undergoing job training and an assessment of the knowledge acquired by the line managers of the individual.

All staff in an After-Sales dealership must have undergone level 0 - BLUE area training before using or working on an electric vehicle.

The content of this training relates to safety measures to be used during work on an electric vehicle and the recommendations for locking out the 12 V accessories battery.

The training entitled "Making 12 V accessories circuits safe" must be undertaken for each new vehicle.

For non electrical works where diagnostic and/or repair manuals require a connection - disconnection process of the power circuit and traction battery, the staff performing this work are not accredited but trained in relation to the electrical risks. They work under the supervision of a LOCKOUT TECHNICIAN or Z.E. SPECIALIST.

- Before starting their work, the member of staff supervising the work must:
  - receive an Electric vehicle lockout sheet issued by the technician responsible for the electric lockout (LOCKOUT TECHNICIAN OR Z.E. SPECIALIST),
  - a work authorisation from the person authorising access who has secured the vehicle.

2- LEVEL 1 ACCREDITATION – ORANGE AREA TRAINING – "WORKS SUPERVISOR/SAFETY TECHNICIAN AND/OR LOCKOUT TECHNICIAN"

For level 1 - ORANGE area, our staff have to undergo two training courses.

1)"B2VL, BCL" ACCREDITATION TRAINING

Training linked to the electrical accreditation level at least equivalent to B2VL, BCL of the C18-510 and C18-550 standards.

This training is linked to the RENAULT ACADEMY specifications for After-Sales dealerships.

All of this training is split depending on whether it is initial training or refresher training.

In order to keep the accreditation gained from their line manager, refresher training is required at least every 3 years.

2)"APPLICATION ON AN ELECTRIC VEHICLE" TRAINING

Practical training on a vehicle that enables the previously studied theories to be put into practice and to see the electrical dangers related to the operation of our vehicles.

When a new electric vehicle is marketed, "Accreditation - application on an electric vehicle", refresher

training is required.

In order to receive accreditation from line management, refresher training is required at least every 3 years.

3- LEVEL 2 ACCREDITATION – RED AREA TRAINING– "TRACTION BATTERY REPAIRER QUALIFIED ELECTRICAL WORKER"

Staff who will have this level of accreditation will mainly be persons regularly involved in traction battery repairs and who work in special battery repair workshops.

Note:

If these skills are not regularly practiced at least once every 6 months, the accreditation becomes automatically invalid.

To maintain accreditation from line management, accreditation must be renewed and validated at least once a year.

- In order to be accredited by line management, refresher training must be undertaken:
  - Every 4 years(maximum) for accredited personnel who often work (every day) under voltage, or
  - Every 2 years(maximum) for accredited personnel who work sporadically (less than one operation per month) under voltage.

5. ACCREDITATION CERTIFICATE

In order to be able to provide and monitor accreditation documents, it is necessary to manage archived documents centrally and monitor the training refresher dates and medical appointments.

A person is appointed by management to organise and coordinate this process in a department or division of a dealership.

When issuing an accreditation document, three levels of accreditation document are necessary depending on the job held by the member of staff.

These accreditation levels are valid for all members of staff in the RENAULT Group and/or RENAULT After Sales dealerships.

These accreditation levels should be requested from all service providers, suppliers, roadside assistance and After Sales staff.

In the event that the accredited person changes their job, a new accreditation document must be drawn up and signed by the new line management. If there is a link between the initial training and the new job,

it is not necessary to undergo specific refresher training (excluding regular mandatory refresher training).

In the event of a change in management, with the accredited member of staff not changing job, if there is still a link between the accreditations and the job held, the initial document remains valid. It is the role of management to check the link between the job held and the accreditation levels.

Note:

The holder must carry this document during working hours or keep it near their place of work.

1- FILLING OUT AND ARCHIVING TRAINING AND FITNESS CERTIFICATES

A template is supplied with this document(see 01D, Mechanical introduction, Electric vehicle authorisation title : Description) .

The accreditation certificate shall be the official document establishing the electrical qualification of the employee and is signed by the employer.

All copies of documents will be archived in a file by management.

Note:

Both the front and back of the accreditation document must be printed to keep the two pages together on the same sheet.

Fill out page 1, then page 2 with the signatures of the line managers N+1 head of unit or team and the director of the establishment.

2- ALL ACCREDITATIONS

1)PAGE 1

Page 1 is the same on all accreditation documents.

No.: ……	The accreditation documents are stored centrally in the establishment. A serial number must be present.
Establishment :	Write the name of the dealership or the main dealership group to which it is attached.
Holder Surname : First name: Employee no.: Position:	Enter the surname and first name of the member of staff. If there is room, enter the employee number or company reference number. Enter the position of the member of staff (CARTECH, RTE, workshop manager, etc.)
Employer :	Enter the name of the employer.
Allocation :	Enter the department or workshop number.
Expiry date :	❑ Enter the expiry date in relation to the dates of the various past or future events: ■ Medical visit, ■ Training for the "electric vehicle implementation" job, ■ Original or refresher accreditation training.

3- LEVEL 0 ACCREDITATION – BLUE AREA TRAINING – "EXPERIENCED, NON-ELECTRICAL OPERATIVE"

During job training, a training certificate shall be given to the member of staff.

The dealership director must check that all staff has undergone this training before using or repairing an electric vehicle, excluding components supplied by the traction battery.

1)PAGE 2: INSTRUCTED PERSON, NON-ELECTRICAL OPERATIVE

An up-to-date list which details all the dealership staff who must undergo BLUE job training before dealing with an electric vehicle must be held by dealerships.

HOLDER	ACCREDITATION SYMBOL	Scope of applicability		
		VOLTAGE RANGE	INSTALLATION OR VEHICLES AFFECTED	ADDITIONAL INFORMATION
Experienced, non-electrical operative	B0L	Extra Low Voltage and Low Voltage	KANGOO Z.E. FLUENCE Z.E. ZOE TWIZY	

4- LEVEL 1 ACCREDITATION – ORANGE AREA TRAINING – "WORKS SUPERVISOR/SAFETY TECHNICIAN AND/OR LOCKOUT TECHNICIAN"

1)PAGE 2: "LOCKOUT TECHNICIAN" QUALIFIED OPERATIVE

HOLDER	ACCREDITATION SYMBOL	Scope of applicability		
		VOLTAGE RANGE	INSTALLATION OR VEHICLES AFFECTED	ADDITIONAL INFORMATION
Works supervisor	B2VL	Extra Low Voltage and Low Voltage	KANGOO Z.E. FLUENCE Z.E. ZOE TWIZY	
Lockout technician	BCL	Extra Low Voltage and Low Voltage	KANGOO Z.E. FLUENCE Z.E. ZOE TWIZY	LOCKOUT TECHNICIAN

B2 : he/she is responsible for work or operations. He is responsible for his safety and those under his supervision.

L : he is authorised to work on electric vehicles.

B2VL : he/she is authorised to approach live parts wearing personal protective equipment.

BCL : he/she is responsible for performing lockout in order to make the equipment safe for himself/herself and for other non-B2 accredited workers.

Additional information: LOCKOUT technician =>Accredited to make the vehicle safe only.

2)PAGE 2: "Z.E. SPECIALIST" QUALIFIED PERSONNEL

HOLDER	ACCREDITATION SYMBOL	Scope of applicability		
		VOLTAGE RANGE	INSTALLATION OR VEHICLES AFFECTED	ADDITIONAL INFORMATION
Works supervisor	B2VL	Extra Low Voltage and Low Voltage	KANGOO Z.E. FLUENCE Z.E. ZOE TWIZY	Z.E. SPECIALIST
Lockout technician	BCL	Extra Low Voltage and Low Voltage	KANGOO Z.E. FLUENCE Z.E. ZOE TWIZY	LOCKOUT TECHNICIAN

B2 : he/she is responsible for work or operations. He is responsible for his safety and those under his supervision.

L : he is authorised to work on electric vehicles.

B2VL : he/she is authorised to approach live parts wearing personal protective equipment.

BCL : he/she is responsible for performing lockout in order to make the equipment safe for himself/herself and for other non-B2 accredited workers.

❑ Additional information:

- LOCKOUT technician =>Accredited to make the vehicle safe only,
- Z.E. SPECIALIST =>Accredited to make the vehicle safe and to work on components supplied by the traction battery.

5- LEVEL 2 ACCREDITATION – RED AREA TRAINING – "TRACTION BATTERY REPAIRER QUALIFIED ELECTRICAL WORKER"

This is the standard accreditation level for personnel working on an open battery.

1)PAGE 2: "TRACTION BATTERY REPAIRER"

HOLDER	ACCREDITATION SYMBOL	Scope of applicability		
		VOLTAGE RANGE	INSTALLATION OR VEHICLES AFFECTED	ADDITIONAL INFORMATION
Works supervisor	B2VL	Extra Low Voltage and Low Voltage	KANGOO Z.E. FLUENCE Z.E. ZOE TWIZY	Z.E. SPECIALIST
Lockout technician	BCL	Extra Low Voltage and Low Voltage	KANGOO Z.E. FLUENCE Z.E. ZOE TWIZY	LOCKOUT TECHNICIAN
Special skills	B2TL	Extra Low Voltage and Low Voltage	KANGOO Z.E. FLUENCE Z.E. ZOE TWIZY	TRACTION BATTERY REPAIRER

❑ Additional information:

- LOCKOUT TECHNICIAN =>Accredited to make the vehicle safe only,
- Z.E. SPECIALIST =>Accredited to make the vehicle safe and to work on components supplied by the traction battery,
- TRACTION BATTERY REPAIRER =>Accredited to work in a battery repair centre.

6- SERVICE PROVIDER OR SUPPLIER PERSONNEL

RENAULT or the After Sales dealership employing a service provider or supplier must ensure the ability of the company to carry out the set tasks safely.

The manager of the service provider or supplier company must provide the head of establishment or his/her nominated representative with all required documents during negotiations and when work commences.

The company providing the service or the supplier is responsible for ensuring that persons working on a RENAULT site or After Sales dealership have the necessary accreditation.

For the service provider or supplier personnel, the accreditation certificate must be signed by the company manager.

The service provider or supplier must have attended training on "Application on an electric vehicle" organised by RENAULT SAS or After Sales dealership employing him/her. The aim of this training course is to explain to the service provider or supplier the rules for making safe the vehicle entrusted to him/her for repair.

The site manager for the service provider or supplier attending the training session ensures that his/her personnel are present.

The manager of the service provider or supplier ensures that the personnel working on site have been trained.

❑ The manager of the service provider or supplier ensures the traceability between his/her personnel and the accreditation number issued. The manager of the company must be able to produce all documents required at any time:

- Electrical accreditation certificate,
- Certificate of further training in his company's format.

Note:

The supplier cannot work alone without the presence of a RENAULT or After Sales dealership employee or person approved by RENAULT or the After Sales dealership.

6. SYNTHESE

	Training at level 0 - BLUE area "Experienced, non-electrical operative"	Level 1 - ORANGE area "LOCKOUT TECHNICIAN" accreditation	Level 1 - ORANGE area "Z.E. SPECIALIST" accreditation	Level 2 - RED area "TRACTION BATTERY REPAIRER" accreditation
MEDICAL				
Medical	-	Every two years	Every two years	Every year
VEHICLE TRAINING				
Verification of electricity-related aptitudes	YES for personnel working in preparation, diagnostics or repairs (12 V)	YES	YES	YES
New vehicle and making the vehicle safe training	YES	YES	YES	YES
12 V lockout on an electric vehicle training	YES for personnel working in preparation, diagnostics or repairs (12 V)	-	-	-
12 V and 400 V lockout training	-	For each new vehicle	For each new vehicle	For each new vehicle
TRAINING RELATED TO ACCREDITATIONS				
BLUE training	YES	YES	YES	YES
ORANGE training	NO	YES	YES	YES

ORANGE refresher training	NO	every three years	every three years	Every three years if working on vehicles
RED training	NO	NO	NO	YES
RED refresher training	NO	NO	NO	Every two years or four years depending on number repairs/year
ACCREDITATION				
ACCREDITATION	B0L	B2VL BCL LOCKOUT TECHNICIAN	B2VL BCL Z.E. SPECIALIST	B2VL BCL+ B2T TRACTION BATTERY REPAIRER
Check and/or renew accreditation certificate	Every year	Every year	Every year	Every year

Repair-00x08x02-02x21-1-1-1.xml

XSL version : 3.02 du 22/07/11

ELECTRICVEHICLEGENERALINFORMATION :GENERALINFORMATION

1. OBJECTIVE

This document outlines the requirements to be met and satisfied in order to implement a work process for electric vehicles involving the staff of the After-Sales network within the Renault group.

2. LEGISLATIVE CONTEXT

Electrical energy has been used for more than a century in industry, business, transport and in the home.

Robust safety intervention procedures for electrical installations have been defined for many years. They have been tested in all fields of activity (manufacture, industry, vehicles, etc.).

The electric vehicle project is based on these existing rules to define the process of vehicle assembly and repair procedures in safety.

❑ The framework for the competency accreditation procedure is the applicability of the legislation related to working on all types of electrical systems. The electric vehicle is part of this framework. There are currently no specific regulations for electric vehicles which are valid on an international scale. The references used to construct the safety procedure are the following:

- The Renault code of ethics,
- The use of electrical installations EN 50110-1,
- The set of general electrical safety instructions, publication UTE C 18-510 and C 18-550.

1- WORKING CONDITIONS POLICY

Taken from the "DECLARATION ON THE BASIC SOCIAL RIGHTS OF THE RENAULT GROUP":

"Health, safety and working conditions

For the Renault Group, improving the health, safety and working conditions of the members of staff is a priority objective.

Renault considers the European legislation a benchmark in terms of occupational risk prevention and, based on this, has defined a Group policy outlined in the document entitled "Group Working Conditions Policy". Renault is committed to deploying this policy by implementing the corresponding inventories and action plans.

The commitment of suppliers to a policy of occupational risk prevention in line with the principles outlined by Renault constitutes a selection criterion.

Renault ensures that qualified doctors regularly monitor the health of its employees and has developed an active prevention policy. In this context, Renault attaches particular importance to protection against

HIV/AIDS, STDs and substance abuse (drugs) in the countries most concerned".

2- USE OF ELECTRICAL INSTALLATIONS

The European standard EN 50110-1 specifies the safety conditions of working closely with and on electrical installations. This standard is a benchmark for countries within the European Community and forms part of the local regulations.

3- THE TECHNICAL UNION OF ELECTRICITY (UTE)

The accreditation process is based on the vocational rules for electrical activities (Technical Union of Electricity: UTE) in France, which has led to a significant reduction in accidents at work in this area.

The UTE is the French national organisation for standards in the electrotechnical field. The UTE is the French Electrotechnical Committee (CEF), a member of the International Electrotechnical Commission (IEC) and the European Committee for Electrotechnical Standardisation (CENELEC).

The UTE C 18-510 standard is intended to publicise the requirements to be met in order to avoid injuries when carrying out operations during manufacture, or during operation on or maintenance of electrical installations. The content of this standard is considered one of the most stringent in terms of safety.

4- VOCATIONAL RULES FOR USER COMPANIES

The training provided must be appropriate to the processes put in place by companies. This is represented by the application of repair methods, connection - disconnection procedures or lockout and removal of lockout procedures (making the vehicles safe), personal protective equipment, instruction manuals for electrical devices, roadside assistance user guides and "Emergency Response Guides".

Any person working on an electric vehicle component must have a valid accreditation certificate.

5- LOCAL RULES

The local rules and standards for each country are not mentioned in this document.

They must, however, be applied.

In all cases, the RENAULT SAS reference is the minimum benchmark to apply.

3. RISKS RELATED TO THE USE OF ELECTRICITY

Why is it necessary to have electrical accreditation, connection/disconnection procedures and

lockout/removal of lockout procedures (making the vehicle safe)?

1- TO PROTECT AGAINST THE RISK OF ACCIDENTS RELATED TO ELECTRICITY

- Risks of short circuit (burns, UV radiation, fire, toxic gas, etc.),

- Risks of electric shock or electrocution (DANGER of DEATH).

EXTRA LOW VOLTAGE ALTERNATING CURRENT THRESHOLDS

Dry environment	U less than 50 V
Damp environment	U less than 25 V
Wet environment	U less than 12 V

EXTRA LOW VOLTAGE DIRECT CURRENT THRESHOLDS

Dry environment	U less than 120 V
Damp environment	U less than 60 V
Wet environment	U less than 30 V

EXTRA LOW VOLTAGE DIRECT CURRENT THRESHOLDS FOR WORK REQUIRED BY RENAULT SAS

Dry environment	U less than 60 V
Damp environment	U less than 30 V
Wet environment	U less than 15 V

2- HOW TO PROTECT YOURSELF

- Standard number 1 : Through product design and job role
  - Protect live conductors by distance (insulation, IP2X, shields, etc.),
  - Work with the electrical supply switched off,
  - Work below 60 V direct current voltages with dry skin when repairing traction batteries.

- Standard number 2 : Lockout/removal of lockout procedure (making the vehicle safe)
  - Use personal protective equipment, special tools, electrician's insulation tools and garage equipment tools,
  - Put the vehicle in the safety mode in order to work without any live voltage; lock out the vehicle.

- Standard number 3 : By monitoring competency and training
  - Analyse the professional requirements for working on electric vehicles,
  - Conduct a medical fitness examination,
  - Electrical competency and electrical safety tests,
  - Refresher training about electricity if necessary,
  - Electrical accreditation training,
  - Vehicle or traction battery safety training. Safety training relating to vehicles or traction batteries. Knowledge of the dangers and means of protection should be covered for each new vehicle,
  - Safety training appropriate to the work station.

This document is described using several documents whose links are below:

- Link to UD(see 01D, Mechanical introduction, Electric vehicle authorisation : Description)

- Link to UD(see 01D, Mechanical introduction, Workshop process for electric vehicle : Description)

- Link to UD(see 01D, Mechanical introduction, Lockout-Removal of lockout process for electric vehicle : Description)

- Link to UD(see 01D, Mechanical introduction, External electrical tools for electric vehicle : Description)

- Link to UD(see 01D, Mechanical introduction, Personal protection equipment for electric vehicle : Description)

- Link to UD(see 01D, Mechanical introduction, Tools for electric vehicle : Description)

- Link to UD(see 01D, Mechanical introduction, Warning placard for electric vehicle : Description)

- Link to UD(see 01D, Mechanical introduction, Safe vehicle placard for electric vehicle : Description)

- Link to UD(see 01D, Mechanical introduction, Electric vehicle lockout sheet : Description)

- Link to UD(see 01D, Mechanical introduction, Electric vehicle authorisation title : Description)

ELECTRICAL ACCESSORIES SOCKET: REMOVAL - REFITTING

Note, one or more warnings are present in this procedure

WARNING

- To avoid all risk of damage to the systems, apply the safety and cleanliness instructions and operation recommendations before carrying out any repair:
  - Vehicle: Precautions for the repair .

Note:

The electrical accessories socket is located in the left-hand glovebox.

REMOVAL

1. REMOVAL OPERATION

- Unclip the fuses flap Dashboard assembly: Exploded view .
- Disconnect the accessories socket connector.

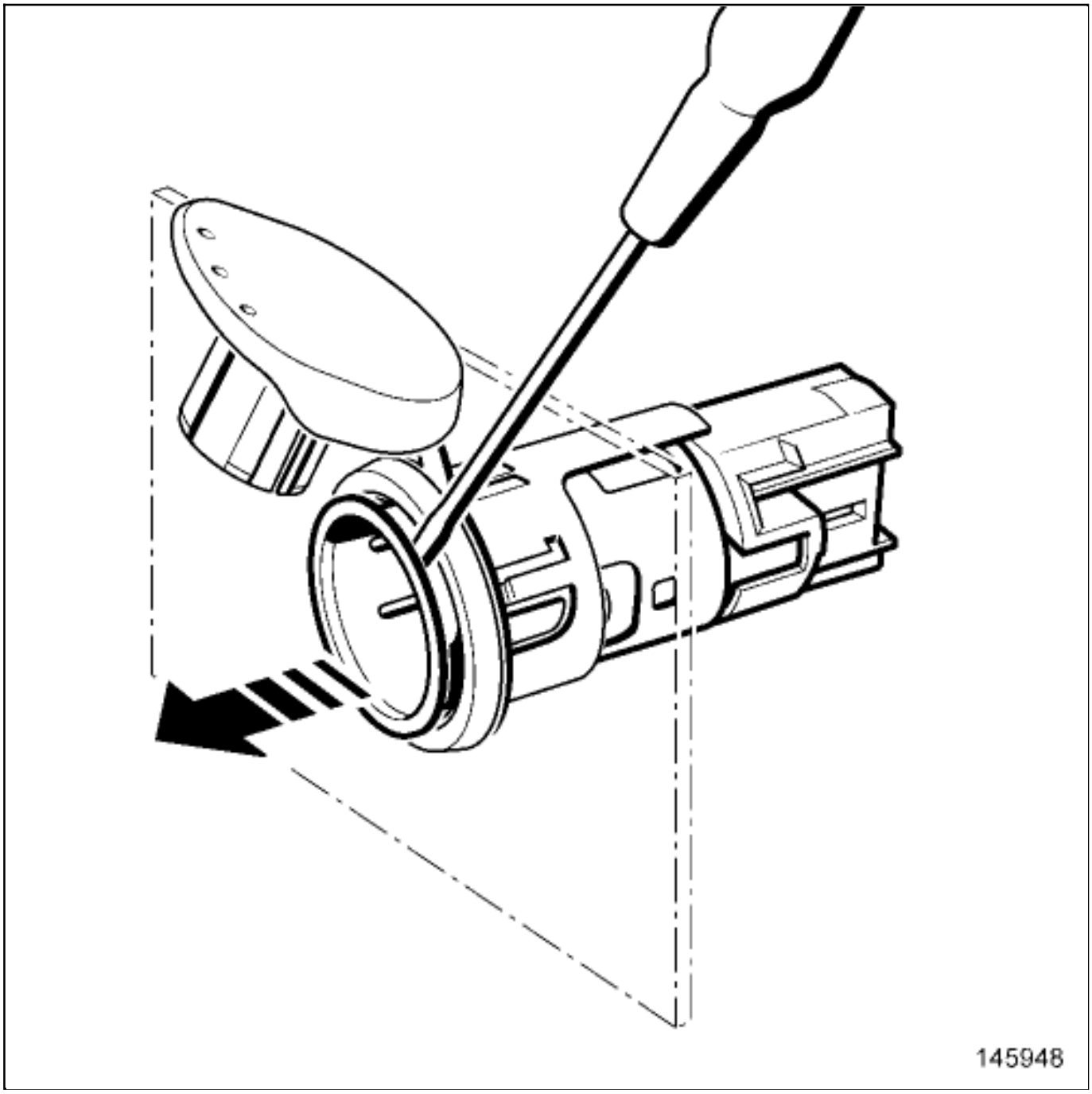
145948

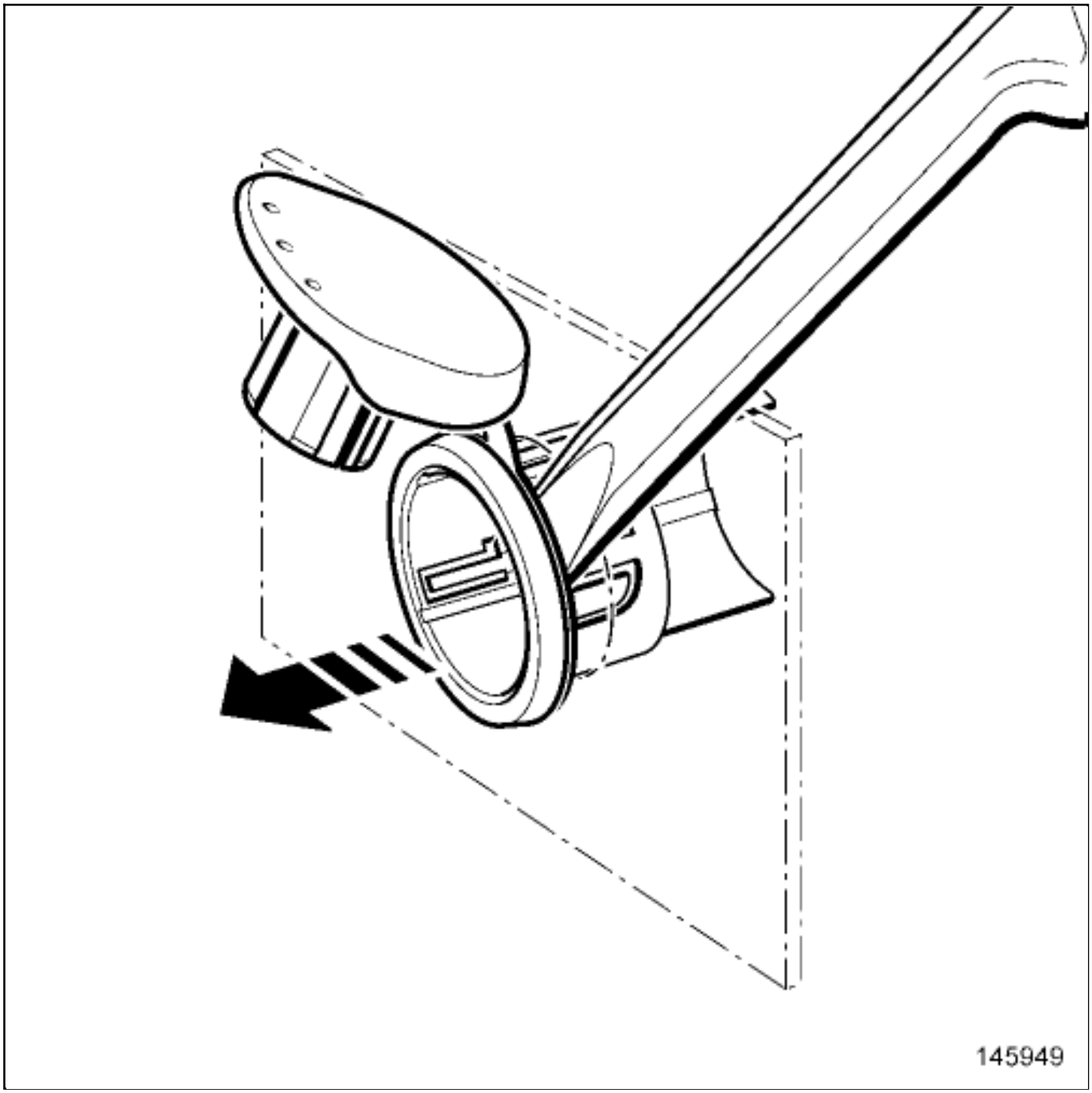

Remove:

- the internal part of the electrical accessories socket using a flat-blade screwdriver.
- the plastic support of the electrical accessories socket.

REFITTING

Proceed in the reverse order to removal.

Repair-30x04x11x01-01x37-1-11-1.xml

XSL version : 3.02 du 22/07/11

TWIZY

8 Electrical equipment

87B PASSENGER COMPARTMENT CONNECTION UNIT

UCH
Vdiag No.: 09

Fault finding – List and location of components	87B - 2
Fault finding – Role of components	87B - 3
Fault finding – Configuration	87B - 4
Fault finding – Replacement of components	87B - 5
Fault finding – Summary table of faults	87B - 6
Fault finding – Interpretation of faults	87B - 7
Fault finding – Conformity check	87B - 13
Fault finding – Interpretation of statuses	87B - 17
Fault finding – Command summary table	87B - 23
Fault finding – Interpretation of commands	87B - 24
Fault finding – Customer complaints	87B - 30
Fault finding – Fault finding charts	87B - 32

V2 **Edition Anglaise**

"The repair procedures given by the manufacturer in this document are based on the technical specifications current when it was prepared.

The procedures may be modified as a result of changes introduced by the manufacturer in the production of the various component units and accessories from which his vehicles are constructed."

All rights reserved by Renault s.a.s.

Copying or translating, in part or in full, of this document or use of the service part reference numbering system is forbidden without the prior written authority of Renault s.a.s.

© Renault s.a.s. 2012

1	UCH
2	Passenger Compartment Fuse and Relay Box
3	Instrument panel
4	Diagnostic socket
5	Airbag computer / pretensioner

GENERAL OPERATION

The UCH is involved in the following three functions (shared between several computers):

– Access - Security Function

This function is divided into three sub-functions, which are: Access, Protection, and Starting (see **87B, Access – Security**).

– Wiping function

This function is divided into two sub-functions, which are: Wiper control and Wiper power (see **87B, Wiping - Washing**).

– Lighting Function

This function is divided into two sub-functions, which are: Lighting control and Lighting power (see **87B, Lighting**).

UCH CONFIGURATIONS

The configuration options for the UCH are:

Configuration	Configuration reading	Name of configuration	Configuration
CF052	**LC166**	De-icing function	**SC008 UCH type Screen 1**
CF054	**LC009**	Hazard warning lights illuminated upon impact	
CF070	**LC113**	Airbag	**SC008 Screen 2**
CF073	**LC097**	Type of key	
CF130	**LC163**	Overspeed alarm	
CF082	**LC149**	Key locking	**SC008 Screen 3**
CF071	**LC164**	Software lock	
CF167	**LC065**	Flashing buzzer	**CF167**

CONFIGURATION OF THE UCH COMPUTER

- With the ignition on, establish dialogue with the UCH computer.
- In the **Repair Mode** menu, go to the **Configuration** tab.

Choose the scenario: **SC008 UCH type** and follow the instructions on the **diagnostic tool**.

Check that the configuration has been correctly stored using the **Read configuration** menu.

When replacing the UCH, component code **645** (see **MR 454, Mechanical, 87B, Passenger Compartment Connection Unit, UCH: Removal - Refitting**), perform the programming and configurations in the following order:
– Enter the VIN, using command **VP004 Enter VIN** (see **Programming**).
– Program the UCH using command **SC004 UCH Programming** (see **Interpretation of commands**).
– Configure the UCH (in the Configuration and programming menu) using command **SC008 UCH type** (see **Interpretation of commands**).
– Allocate the keys using command **SC015 Key allocation** (see **Interpretation of commands**).

The removal of the UCH is carried out after the left storage compartment has been removed.

The UCH is clipped onto its mounting.

IMPORTANT:
Do not remove the UCH mounting as this may damage it.
If it is removed it must be replaced.

Tool fault	Diagnostic tool title
DF162	Heated windscreen relay control
DF177	Siren circuit
DF184	Impact detected signal
DF271	UCH internal electronic fault
DF273	Impact connection

DF162 PRESENT OR STORED	HEATED WINDSCREEN RELAY CONTROL CO.0: Open circuit or short circuit to earth CC.1: Short circuit to +12 volts

NOTES	**Conditions for applying the fault finding procedure to stored faults:** The fault is declared present after activating the heated windscreen with the electric motor running.
	Special note: Use the **Wiring Diagrams Technical Note for Twizy**.

CO.0	***NOTES***	None.

Check the condition of fuse **F07 (20 A)** of the passenger compartment fuse box, component code **1016** and the correct operation of the heated windscreen relay, component code **805**. Replace the fuse (see **MR 454 Mechanical, 81C, Fuses, 80B, Fuses: List and location of the components**) and the heated windscreen relay if it is defective.
Check the **condition** and **connection** of the connectors of the heated windscreen, component code **805**. If the connectors are faulty and if there is a repair procedure (see **Technical Note 6015A (Renault), Repairing electrical wiring, Wiring: Precautions for repair**), repair the connectors, otherwise replace the wiring.
Check for **+12 V** on the heated rear screen relay, component code **805** on the following connection: • **AP7** of component **805**. Check **the continuity and insulation** of the following connection: **AP7** between components **1016** and **805**. If the connection or connections are faulty and if there is a repair procedure (see **Technical Note 6015A (Renault), Repairing electrical wiring, Wiring: Precautions for repair**), repair the wiring, otherwise replace it.

AFTER REPAIR	Follow the instructions. Deal with any other faults. Clear the stored faults.

DF162 CONTINUED	

Check **the continuity, the insulation to earth**, and **the absence of interference resistance** on the following connection: • **15M** between components **645** and **805**. If the connection is faulty and if there is a repair procedure (see **Technical Note 6015A (Renault), Repairing electrical wiring, Wiring: Precautions for repair**), repair the wiring, otherwise replace the wiring.
If the fault is still present, contact Techline.

CO.1	*NOTES*	None.

Check the **condition** and **connection** of the connectors of the heated windscreen relay, component code **805**. If the connectors are faulty and if there is a repair procedure (see **Technical Note 6015A (Renault), Repairing electrical wiring, Wiring: Precautions for repair**), repair the connectors, otherwise replace the wiring.
Check the **insulation to +12 V** and the **absence of interference resistance** on the following connection: • **15M** between components **1016** and **805**. If the connection is faulty and if there is a repair procedure (see **Technical Note 6015A (Renault), Repairing electrical wiring, Wiring: Precautions for repair**), repair the wiring, otherwise replace the wiring.
If the fault is still present, contact Techline.

AFTER REPAIR	Follow the instructions. Deal with any other faults. Clear the stored faults.

DF177 PRESENT OR STORED	SIREN CIRCUIT CC.1: Short circuit to +12 volts CO.0: Open circuit or short circuit to earth

NOTES	If the vehicle is fitted with an alarm: Check that the vehicle is configured with an alarm.
	Special note: Use the **Wiring Diagrams Technical Note for Twizy**.

Check the condition and presence of fuse F06 (15 A) Replace the fuse if necessary (see **MR 454 Mechanical, 81C, Fuses, Fuses: List and location of components**).
Check the **condition** and **connection** of the siren connector (tabs bent, oxidised, broken). If the connector is faulty and if there is a repair procedure (see **Technical Note 6015A (Renault), Repairing electrical wiring, Wiring: Precautions for repair**), repair the connector, otherwise replace the wiring.
If the fault is still present, contact Techline.

AFTER REPAIR	Follow the instructions. Deal with any other faults. Clear the stored faults.

UCH_V09_DF177

DF184 STORED	IMPACT DETECTION SIGNAL

NOTES	The fault is declared **stored** after an impact is detected.

Perform fault finding on the airbag function (see **88C, Airbags and pretensioners**).
If the fault is still present, contact Techline.

AFTER REPAIR	Follow the instructions. Deal with any other faults. Clear the stored faults.

UCH_V09_DF184M

DF271 PRESENT	UCH INTERNAL ELECTRONIC FAULT

NOTES	**Special notes**: if there is a **stored** fault, check whether there are any other faults **present** and clear them. Fault declared **present** when the ignition is switched off.

If the fault is still present, contact Techline.

AFTER REPAIR	Follow the instructions. Deal with any other faults. Clear the stored faults.

DF273 PRESENT OR STORED	IMPACT CONNECTION

NOTES	**Special notes:** The fault is **present** 8 seconds after the ignition is switched on and becomes **stored** after the ignition is switched off.
	Special note: Use the **Wiring Diagrams Technical Note for Twizy**.

Perform fault finding on the airbag function (see **88C, Airbags and pretensioners**).
Check the **connection** and **condition** of the UCH connectors, component code **645**. If the connectors are faulty and if there is a repair procedure (see **Renault Technical Note 6015A, Repairing electrical wiring, Wiring: Precautions for repair**), repair the connectors, otherwise replace the wiring.
Check the **connection** and **condition** of the airbag computer connectors, component code **756**. If the connectors are faulty and if there is a repair procedure (see **Renault Technical Note 6015A, Repairing electrical wiring, Wiring: Precautions for repair**), repair the connectors, otherwise replace the wiring.
Check the **insulation, continuity** and the **absence of interference resistance** on the following connection: • **60BR** between components **645** and **756**. If the connection is faulty and if there is a repair procedure (see **Renault Technical Note 6015A, Repairing electrical wiring, Wiring: Precautions for repair**), repair the wiring, otherwise replace the wiring.
If the fault is still present, contact Techline.

AFTER REPAIR	Follow the instructions. Deal with any other faults. Clear the stored faults.

UCH_V09_DF273

NOTES	Only carry out a conformity check after a **complete check** with the diagnostic tool. The values shown in this conformity check are given as examples. Application condition: **engine off, ignition on**.

MAIN SCREEN

Function	Parameter or state checked or action		Display and notes	Fault finding
Engine immobiliser	**ET549:**	Immobiliser active	**YES** **NO**	In the event of a fault, apply the interpretation of status **ET549**.
Blank UCH	**ET008:**	Blank UCH	**YES** **NO**	In the event of a fault, apply the scenario **SC004 UCH programming**.
Power supply	**PR001:**	Battery voltage	**12 V < X < 12.5 V**	In the event of a fault, run fault finding on the charging circuit (see **Technical Note 6014A (Renault) or Technical Note 9859A (Dacia), Checking the charging circuit**).
	ET004:	+ 12v after ignition feed	**YES** **NO**	In the event of a fault, apply the interpretation of status **ET004**.
Speed	**PR008:**	Vehicle speed	**X in mph**	In the event of a fault, perform a test on the vehicle speed or ABS computer (see **38C, Anti-lock braking system**).

NOTES	Only carry out a conformity check after a **complete check** with the diagnostic tool. The values shown in this conformity check are given as examples. Application condition: **engine off, ignition on**.

FUNCTION: ACCESS - SAFETY

SUB-FUNCTION: ACCESS

Function	Parameter or state checked or action		Display and notes	Fault finding
Power supply	**ET004:**	+ 12v after ignition feed	**YES** **NO**	In the event of a fault, apply the interpretation of status **ET004**.
Speed	**PR008:**	Vehicle speed	**X in mph**	In the event of a fault, perform a test on the vehicle speed or ABS computer (see **38C, Anti-lock braking system**).
Safety	**AC176**	Alarm siren	**This command is used to activate the siren.**	In the event of a fault, apply the procedure for dealing with command **AC176**.

NOTES	Only carry out a conformity check after a **complete check** with the diagnostic tool. The values shown in this conformity check are given as examples. Application condition: **engine off, ignition on**.

FUNCTION: ACCESS - SAFETY

SUB-FUNCTION: STARTING

Function	Parameter or state checked or action		Display and notes	Fault finding
Power supply	**ET004:**	+ 12v after ignition feed	**YES** **NO**	In the event of a fault, apply the interpretation of status **ET004**.
Engine immobiliser	**ET549:**	Immobiliser active	**NO** when the + after ignition is switched on **YES** when the key is not in the ignition switch	If the status is inconsistent, apply the interpretation of status **ET549**.
Immobiliser warning light	**ET127:**	Immobiliser warning light	**OFF** when the + after ignition is switched on. **ILLUMINATED** when the key is not in the ignition switch	In the event of a fault, apply the interpretation of status **ET127**.

NOTES	Only carry out a conformity check after a **complete check** with the diagnostic tool. The values shown in this conformity check are given as examples. Application condition: **engine off, ignition on**.

FUNCTION: ACCESS - SECURITY (CONTINUED)

SUB-FUNCTION: STARTING

Function	Parameter or state checked or action		Display and notes	Fault finding
Key	**PR056:**	Number of keys allocated	**1** to **4**	In the event of a fault, apply the interpretation of parameter **PR056** (see **Access – Security**).
	ET185:	Key code received	**YES** when the ignition is switched on **NO** if the ignition is not switched on	In the event of a fault, apply the interpretation of status **ET185** (see **Access – Security**).
Engine immobiliser	**AC003**	Immobiliser warning light	This command is used to illuminate the immobiliser warning light	In the event of a fault, apply the procedure for dealing with command **AC003**.
De-icing	**ET547**	Rear de-icing button	**PRESSED** when the heated rear screen button is pressed. **RELEASED** if the heated rear screen button is not pressed	In the event of a fault, apply the interpretation of status **ET547**.

ET004	+ 12 VOLTS AFTER IGNITION

NOTES	**Special note:** Use the **Wiring Diagrams Technical Note for TWIZY**.

ET004: NO with the ignition on.

Check fuse **F06 (15A)** in the passenger compartment fuse box, component code**1016** (see **MR 454 Mechanical, 81C, Fuses, Fuses: List and location of components**).

Check for **+12 V** after ignition feed on the UCH, component code **645** on the following connection:
- **AP10** of component **645**.

Check the **continuity** and **insulation to earth** of the following connection:
- **AP10** between components **645** and **1016**.

If the connection or connections are faulty and if there is a repair procedure (see **Technical Note 6015A (Renault), Repairing electrical wiring, Wiring: Precautions for repair**), repair the wiring, otherwise replace the wiring.

AFTER REPAIR	Carry out another fault finding check on the system. Deal with any other faults. Clear the **stored** faults.

ET004 CONTINUED	+ 12 VOLTS AFTER IGNITION

ET004: YES with the ignition off.

Using a multimeter, check that there is no **+12 V** with the ignition off on connection **AP10** of the UCH connector, component code **645**.
If the voltage is present, check the insulation to **+12 V** of the following connection:
- **AP10** between components **645** and **1016**.

If the connection is faulty and if there is a repair procedure (see **Technical Note 6015A (Renault), Repairing electrical wiring, Wiring: Precautions for repair**), repair the wiring, otherwise replace the wiring.

If the fault is still present, contact the Techline.

AFTER REPAIR	Carry out another fault finding check on the system. Deal with any other faults. Clear the **stored** faults.

ET127	IMMOBILISER WARNING LIGHT

NOTES	The immobiliser warning light status should be **OFF** when the + after ignition feed is switched on. The immobiliser warning light status should be **ON** when the key is not in the ignition switch.
	Special note: Use the **Wiring Diagrams Technical Note for TWIZY**.

Check the **connection** and **condition** of the instrument panel connector, component code **247**. If the connector is faulty and if there is a repair procedure (see **Technical Note 6015A (Renault), Repairing electrical wiring, Wiring: Precautions for repair**), repair the connector, otherwise replace the wiring.
Check the **connection** and **condition** of the UCH connector, component code **645**. If the connector is faulty and if there is a repair procedure (see **Technical Note 6015A (Renault), Repairing electrical wiring, Wiring: Precautions for repair**), repair the connector, otherwise replace the wiring.
Using a multimeter, check the **continuity** and **insulation** of the following connection: • **80T** between components **645** and **247**. If the connection is faulty and if there is a repair procedure (see **Renault Technical Note 6015A, Repairing electrical wiring, Wiring: Precautions for repair**), repair the wiring, otherwise replace the wiring.
If the fault is still present, contact the Techline.

AFTER REPAIR	Carry out another fault finding check on the system. Deal with any other faults. Clear the **stored** faults.

UCH_V09_ET127

ET547	REAR DE-ICING BUTTON

NOTES	There must be no **present** or **stored** faults.
	Special note: Use the **Wiring Diagrams Technical Note for TWIZY**.

Check the **condition** and **connection** of the connector of the combined wiper-washer, component code **145** If the connector is faulty and if there is a repair procedure (see **Technical Note 6015A (Renault), Repairing electrical wiring, Wiring: Precautions for repair**), repair the connector, otherwise replace the wiring.
Check **the earth** on connection **MAM** of the connector of the combined wiper-washer, component code**145** If the connection is faulty and if there is a repair procedure (see **Renault Technical Note 6015A, Repairing electrical wiring, Wiring: Precautions for repair**), repair the wiring, otherwise replace the wiring.
Check the **condition** and **connection** of the UCH connector, component code **645** (tabs bent, broken, etc.). If the connector is faulty and if there is a repair procedure (see **Technical Note 6015A (Renault), Repairing electrical wiring, Wiring: Precautions for repair**), repair the connector, otherwise replace the wiring.

AFTER REPAIR	Carry out another fault finding check on the system. Deal with any other faults. Clear the **stored** faults.

UCH_V09_ET547

ET547 CONTINUED	REAR DE-ICING BUTTON

Check the **insulation, continuity** and the **absence of interference resistance** on the following connection: • **15B** between components **145** and **645**. If the connection is faulty and if there is a repair procedure (see **Renault Technical Note 6015A, Repairing electrical wiring, Wiring: Precautions for repair**), repair the wiring, otherwise replace the wiring.
If the fault is still present, replace the combined wiper-washer (see **MR 454 Mechanical, 84A, Controls - Signals, Heated rear screen switch: Removal - Refitting**).
If the fault is still present, contact the Techline.

AFTER REPAIR	Carry out another fault finding check on the system. Deal with any other faults. Clear the **stored** faults.

ET549	ENGINE IMMOBILISER ACTIVE

NOTES	The immobiliser status **YES** should change to **NO** when the + after ignition feed is switched on. The immobiliser status should be **YES** when the key is not in the ignition switch. First check the conformity of statuses **ET004 +12 V after ignition feed**, **ET184 Valid key code**, and **ET185 Key code received**.

Check status **ET185** and status **ET184** with the ignition on. If the statuses **ET185** and **ET184** are **YES**, perform fault finding on the inverter power electronic block. If status **ET185** is **NO**, deal with this status first. If status **ET185** is **YES** and status **ET184** is **NO**, deal with status **ET184** first.
If the fault is still present, contact the Techline.

AFTER REPAIR	Carry out another fault finding check on the system. Deal with any other faults. Clear the **stored** faults.

Tool command	Diagnostic tool title	Comments
AC003	Immobiliser warning light	See interpretation of the command.
AC176	Alarm siren	See interpretation of the command.
VP004	Write VIN	See interpretation of the command.
SC004	UCH programming	See interpretation of the command.
SC008	Type of UCH	See interpretation of the command.
RZ001	Fault memory	Use this command to clear the faults stored in the computer.

AC003	IMMOBILISER WARNING LIGHT

NOTES	There must be no **present** or **stored** faults. Run the command and note whether the warning light comes on (**3 seconds**).
	Special note: Use the **Wiring Diagrams Technical Note for TWIZY**.

Check the **connection** and **condition** of the **instrument panel** connector, component code **247**. If the connector is faulty and if there is a repair procedure (see **Technical Note 6015A (Renault), Repairing electrical wiring, Wiring: Precautions for repair**), repair the connector, otherwise replace the wiring.
Check the **connection** and **condition** of the **UCH** connector, component code **645**. If the connector is faulty and if there is a repair procedure (see **Technical Note 6015A (Renault), Repairing electrical wiring, Wiring: Precautions for repair**), repair the connector, otherwise replace the wiring.
Using a multimeter, check the **continuity** and **insulation** of the following connection: • **80T** between components **645** and **247**. If the connection is faulty and if there is a repair procedure (see **Technical Note 6015A (Renault), Repairing electrical wiring, Wiring: Precautions for repair**), repair the wiring, otherwise replace the wiring.
If the fault is still present, contact the Techline.

AFTER REPAIR	Carry out a road test, then check with the **diagnostic tool**.

UCH_V09_SC003

AC176	ALARM SIREN

NOTES	There must be no **present** or **stored** faults. Run the command and note whether the alarm siren works.

In the event of a fault, consult the interpretation of fault **DF177 Siren circuit**.

AFTER REPAIR	Carry out a road test, then check with the **diagnostic tool**.

VP004	ENTERING THE VIN

NOTES	This command enables the vehicle identification number to be entered manually in the computer. Use this command each time the computer is replaced. **The vehicle identification number is indicated on the manufacturer's plate on the right-hand side door pillar.**

Procedure for writing the VIN
- establish dialogue with the UCH,
- select the **"repair mode"** menu,
- select the **"Other parameters"** menu,
- select the line **VP004**,
- enter the VIN twice,
- exit fault finding mode,
- switch off the ignition;
- wait for the end of **powerlatch**,
- re-read the VIN using **ID019 VIN Code** in the **Identification** menu for confirmation.

AFTER REPAIR	Carry out a road test, then check with the **diagnostic tool**.

SC004	PROGRAMMING THE UCH

Essential equipment
CLIP

Use this command only with a new and blank UCH.

A new UCH has no immobiliser code and is therefore not assigned to the vehicle; once it is fitted on the vehicle, it must be programmed to assign it to the vehicle.

To carry out this programming, always obtain **a key belonging to the vehicle** (assigned to the old UCH).

Before starting this operation, make sure that there are no components likely to interfere with the electromagnetic field (e.g.: CB (Citizen Band), mobile phone, etc.).

Note:
After only the UCH has been replaced, there are no operations to be performed on the computers
The computers keep the same immobiliser code.

IMPORTANT:
When the UCH programming procedure is successfully completed, the UCH is no longer blank and is permanently assigned to the vehicle. It will not work on another vehicle.

IMPORTANT:
At the end of the programming operation, only remove the key when the Programming complete message is displayed on the screen. Otherwise, the programming will fail and the UCH can no longer be used.

AFTER REPAIR	Carry out a road test, then check with the **diagnostic tool**.

SC004 CONTINUED	

IMPORTANT:
Do not interrupt the procedure when it is in progress.
If it is interrupted, restart the procedure in "not connected mode"; a new programming key will be displayed.

UCH programming procedure
– Establish dialogue with the UCH.
– Select the **Repair mode** menu.
– Select the **Programming** menu.
– Select line **SC004 Program UCH**.

Follow the instructions on the **Clip diagnostic tool**.
In "not connected" mode, when the **CLIP diagnostic tool** displays the programming key, make a note of this key and the VIN.
To obtain the immobiliser code, see **Technical Note 5037A**, **Code delivery procedure**.

IMPORTANT:
In "not connected" mode, the programming key can only be used for a limited amount of time, as indicated by the **CLIP diagnostic tool**.
After this time, the programming key and associated immobiliser code are no longer valid. The operation must be restarted from the beginning.

Operations to be carried out after programming the UCH
Enter the vehicle's VIN into the computer using command **VP004 Enter VIN**.
After programming the UCH, allocate all the keys using command **SC015 Allocate key**.
Configure the equipment that is present or not on the vehicle using command **SC008 UCH type**.

AFTER REPAIR	Carry out a road test, then check with the **diagnostic tool**.

SC008	UCH TYPE

Essential equipment
CLIP

This procedure will enable the UCH to be configured in relation to the vehicle to provide optimum running.
– Click on the **Repair** mode and in the **Programming** menu,
– confirm line **SC008**,
– follow the procedure and enter the vehicle equipment,
– check that the options configured are those desired and finish.

AFTER REPAIR	Carry out a road test, then check with the **diagnostic tool**.

UCH_V09_SC008

NOTES	Only consult the customer complaints after performing a complete check with the diagnostic tool.

COMMUNICATION FAULT

No dialogue with the computer	ALP 1

LIGHTING

No side lights	ALP 2
No dipped beam headlights	ALP 3
No headlights	ALP 4
The boot lid light is not working	ALP 8
The brake lights operate erratically	ALP 9
The brake lights are still illuminated and the brake light switch is released	ALP 10
The reversing light operates erratically	ALP 11
The flashing light of the hazard warning lights control button does not work	ALP 12
The backlighting of the hazard warning lights control button operates erratically	ALP 13

WIPERS/WASHERS

The windscreen wiper does not work at high speed	ALP 16
The screen washer pump does not operate when its control is activated	ALP 18

ACCESS - SAFETY

The vehicle will not start	ALP 19

DE-ICING

The heated windscreen operates all the time	ALP 23
Heated windscreen does not operate	ALP 24

ALP 1	No dialogue with the computer

NOTES	**Special note:** Use the **Wiring Diagrams Technical Note for Twizy**.

Test the **diagnostic tool** on another vehicle which is in perfect working order.
Check the presence and condition of the supply fuses of the UCH, component code **645**: • F28 (15 A), F07 (20 A), F06 (15 A) on component **1016**, Replace the fuse(s) if the checks are not correct (see **MR 454, Mechanical, 81C, Fuses, Fuses: List and location of components**).
Check for **+12 V** on the UCH, component code **645** on the following connections: • **BP56** of component **645**, • **AP10** of component **645**, • **AP7** of component **645**. Check the **continuity, insulation**, and the **absence of interference resistance** on the following connection: • **BP56** between components **645** and **1016**, • **AP10** between components **645** and **1016**, • **AP7** between components **645** and **1016**. If the connection or connections are faulty and if there is a repair procedure (see **Technical Note 6015A (Renault), Repairing electrical wiring, Wiring: Precautions for repair**), repair the wiring, otherwise replace the wiring.

AFTER REPAIR	Check the system operation.

UCH_V09_ALP1

ALP 1 CONTINUED 1	

Check for **earth** on the UCH, component code **645** on the following connection:
- **NC** of component **645**.

Check the **continuity, insulation**, and the **absence of interference resistance** on the following connection:
- **NC** between component **645** and **earth**.

If the connection or connections are faulty and if there is a repair procedure (see **Technical Note 6015A (Renault), Repairing electrical wiring, Wiring: Precautions for repair**), repair the wiring, otherwise replace the wiring.

Check the presence and condition of the supply fuses of the diagnostic socket, component code **225**:

- F03 (15 A), F06 (15 A) on component **1016**,

Replace the fuse(s) if the checks are not correct (see **MR 454, Mechanical, 81C, Fuses, Fuses: List and location of components**).

Check for **+12 V** on the diagnostic socket, component code **225** on the following connections:
- **BP56** of component **225**,
- **AP10** of component **225**.

Check the **continuity, insulation**, and the **absence of interference resistance** on the following connection:
- **BP56** between components **225** and **1016**,
- **AP10** between components **225** and **1016**.

If the connection or connections are faulty and if there is a repair procedure (see **Technical Note 6015A (Renault), Repairing electrical wiring, Wiring: Precautions for repair**), repair the wiring, otherwise replace the wiring.

AFTER REPAIR	Check the system operation.

ALP 1 CONTINUED 2	

Check for **earth** on the diagnostic socket, component code **225** on the following connections:
- **NC** of component **225**,
- **MAM** of component **225**.

Check the **continuity, insulation**, and the **absence of interference resistance** on the following connection:
- **NC** between component **225** and **earth**,
- **MAM** between component **225** and **earth**.

If the connection or connections are faulty and if there is a repair procedure (see **Technical Note 6015A (Renault), Repairing electrical wiring, Wiring: Precautions for repair**), repair the wiring, otherwise replace the wiring.

Check the **continuity, insulation**, and the **absence of interference resistance** on the following connection:
- **HK** between components **225** and **645**.

If the connection is faulty and if there is a repair procedure (see **Technical Note 6015A (Renault), Repairing electrical wiring, Wiring: Precautions for repair**), repair the wiring, otherwise replace the wiring.

If the fault is still present, contact the Techline.

AFTER REPAIR	Check the system operation.

ALP 23	The heated windscreen operates all the time

NOTES	
	Only consult this customer complaint after carrying out a complete check with the diagnostic tool. There must be no **present** or **stored** faults.
	Special note: Use the **Wiring Diagrams Technical Note for Twizy**.

Check the condition of the heated windscreen, component code **805**. Replace the relay if necessary.
Check the condition and connection of the connectors of the **heated windscreen relay**, component code **805** and of the UCH, component code **645**. If the connectors are faulty and if there is a repair procedure (see **Technical Note 6015A, Repairing electrical wiring, Wiring: Precautions for repair),** repair the connector, otherwise replace the wiring.
Check the insulation to earth of the following connection: • **15M** between components **805** and **645** Check the insulation to +12 V feed of the following connection: • **123J** between components **805 and 647** If the connection or connections are faulty and if there is a repair procedure (see **Technical Note 6015A (Renault), Repairing electrical wiring, Wiring: Precautions for repair**), repair the wiring, otherwise replace the wiring.
If the fault is still present, contact the Techline.

AFTER REPAIR	Check the system operation.

UCH_V09_ALP23

ALP 24	The heated windscreen is not working

NOTES	
	Only consult this customer complaint after carrying out a complete check with the diagnostic tool. There must be no **present** or **stored** faults.
	Special note: Use the **Wiring Diagrams Technical Note for Twizy**.

Check the presence and condition of the supply fuses of the heated windscreen relay, component code **805**:

- **F07 (20 A)** and **F01 (20 A)** on component **1016**.

Replace the fuse(s) if the checks are not correct (see M**R 454 Mechanical, 81C, Fuses, Fuses: List and location of components**).

Check the **condition** and **connection** of the connector of the heated windscreen relay, component code **805** and of the heated windscreen contact, component code **647**.
If the connectors are faulty and if there is a repair procedure (see **Renault Technical Note 6015A, Repairing electrical wiring, Wiring: Precautions for repair**), repair the connectors, otherwise replace the wiring.

AFTER REPAIR	Check the system operation.

UCH_V09_ALP24

ALP 24 CONTINUED	

Check for **+12 V** on the heated windscreen relay, component code **805** on the following connections:
- **BP3** of component **805**,
- **AP7** of component **805**.

Check **the continuity and insulation** of the following connections:
- **BP3** between components **805** and **1016**,
- **AP7** between components **805** and **1016**,
- **15M** between components **805** and **645**.

If the connection or connections are faulty and if there is a repair procedure (see **Technical Note 6015A (Renault), Repairing electrical wiring, Wiring: Precautions for repair**), repair the wiring, otherwise replace the wiring.

Check for **the presence** of an **earth** on the heated windscreen, component code **647** on the following connection:
- **MAN** of component **647**.

If the connection is faulty and if there is a repair procedure (see **Technical Note 6015A (Renault), Repairing electrical wiring, Wiring: Precautions for repair**), repair the wiring, otherwise replace the wiring.

Check **the continuity and insulation** of the following connection:
- **15B** between components **645** and **145**.

If the connection is faulty and if there is a repair procedure (see **Technical Note 6015A (Renault), Repairing electrical wiring, Wiring: Precautions for repair**), repair the wiring, otherwise replace the wiring.

If the fault is still present, contact the Techline.

AFTER REPAIR	Check the system operation.

TWIZY

8 Electrical equipment

82D ACCESS - SECURITY

UCH
Vdiag No.: 09

Fault finding – List and location of components	82D - 2
Fault finding – Role of components	82D - 3
Fault finding – Function	82D - 4
Fault finding – Configuration	82D - 6
Fault finding – Programming	82D - 8
Fault finding – Summary table of faults	82D - 11
Fault finding – Interpretation of faults	82D - 12
Fault finding – Conformity check	82D - 15
Fault finding – Statuses test	82D - 18
Fault finding – Status summary table	82D - 19
Fault finding – Parameter summary table	82D - 20
Fault finding – Interpretation of parameters	82D - 21
Fault finding – Command summary table	82D - 22
Fault finding – Interpretation of commands	82D - 23

V2 **Edition Anglaise**

"The repair procedures given by the manufacturer in this document are based on the technical specifications current when it was prepared.

The procedures may be modified as a result of changes introduced by the manufacturer in the production of the various component units and accessories from which his vehicles are constructed."

All rights reserved by Renault s.a.s.

Copying or translating, in part or in full, of this document or use of the service part reference numbering system is forbidden without the prior written authority of Renault s.a.s.

© Renault s.a.s. 2012

1	UCH
2	Passenger compartment fuse box
3	Transponder ring

Transponder and radiofrequency key:
the transponder in the key sends the following signals to the UCH:
– Key identifier signal.
– Immobiliser code signal.
The transponder is also involved in the Immobiliser function.

Engine immobiliser

The immobiliser function is distributed over three coded computers (the UCH, the inverter power electronic block and the key). Communication between the key and the UCH is ensured by the transponder ring through a magnetic field created between the transponder ring and the key.

When the + After ignition is switched on, the key sends its identifier to the UCH via the transponder ring, located on the ignition switch. The UCH runs through an authentication procedure with the key via the transponder ring. If the key is allocated to the vehicle, the starter command is authorised and the inverter power electronic block is unlocked.

The inverter power electronic block has no reference code in the memory: the code sent is stored in the memory.

If the code supplied by the key is not recognised by the UCH, then the system remains locked. The red engine immobiliser warning light flashes (quickly). The vehicle cannot be started.

WARNING
When the vehicle battery has a low charge, the drop in voltage caused by operating the starter could reactivate the immobiliser. If the voltage is too low, starting is not possible.

Recognition of keys in normal operation

	IMMOBILISER WARNING LIGHT
Vehicle protected (without After Ignition)	Indicator light flashes at **1 Hz**
Key recognised, injection protection lifted	Warning light continuously illuminated for **3 seconds** and then goes out
Key not recognised, injection protected	Warning light flashes at **4 Hz**

Starting

The UCH controls the command and supply part of the start-up function and the starting and charging process is controlled by the UCH. For this function to operate normally, the protection function must have been successfully completed.

IMPORTANT:
When the vehicle battery has a low charge, the drop in voltage caused by operating the starter could reactivate the immobiliser. If the voltage is too low, starting is not possible.

Note:
If several attempts are made (3 or 4) using a key which is not allocated to the vehicle, the inverter power electronic block locks. Insert a key allocated to the vehicle for **20 seconds** in **+ after ignition feed**, then switch off the ignition and wait for the end of the powerlatch* (**20 minutes**) to allow the inverter power electronic block to unlock.

*Powerlatch: Time required for injection computer supply after **+ 12V** after ignition cut-off to the ignition switch.

New parts are not coded. Once fitted on the vehicle, they must be programmed with a code to become operational.

To perform this procedure, it is essential that some parts on the vehicle are already correctly coded (with the vehicle code).

Refer to the allocation table.

ALLOCATION TABLE

AFTER-SALES OPERATION	STATUS OF COMPONENTS			REPAIR CODE NEEDED
	UCH	Key	inverter power electronic block	
Programming the UCH	Blank	Coded	Coded	YES
Key allocation or cancellation	Coded	Blank*	-	YES

Blank*: The key allocated to a vehicle must be blank or already programmed to this vehicle.

A new UCH is not programmed with a code. You must therefore program a code into a new UCH fitted to a vehicle to make the UCH operational.

To perform this procedure, at least one of the vehicle's old keys and the repair code are required and the inverter power electronic block must be correctly coded (refer to the allocation table).

IMPORTANT:
If a code is programmed into the UCH, the UCH is allocated to the vehicle. It is impossible to erase the code or program in another one. The programmed code cannot be erased.

IMPORTANT:
The keys submitted during this procedure will only work if:
– they have already been coded on this vehicle,
– or they are new (not coded).

Note:
If only the UCH is replaced, there is no operation to perform on the inverter power electronic block, as it retains the same immobiliser code.

Equipment required:
CLIP diagnostic tool.

Access and Safety function configurations in the UCH

Individual configuration available on the **diagnostic tool**, with its associated configuration reading:

Configuration	Configuration reading	Name of configuration	Option	Configuration
CF073	**LC097**	Type of key	**ONE BUTTON or TWO BUTTONS**	**SC008 UCH type**
CF070	**LC113**	Airbag	**WITH or WITHOUT**	

- Check the configurations in the **Read configurations** menu

UCH PROGRAMMING PROCEDURE

The UCH programming procedure is carried out using the **diagnostic tool**.

– Establish dialogue with the UCH computer.
– In the menu **Special commands**, select the command **SC004 Program UCH**.

The tool displays **Remove the key from the anti-theft switch**,

The tool displays **Please enter the After-Sales code**. With the ignition off, enter the secret After-Sales code and validate.

If the code format is correct, the tool displays **Insert a key which has already been programmed to the vehicle** and the programming procedure starts.

The tool displays **UCH programming completed, please start key programming procedure**, the UCH is coded.

Enter key programming mode to allocate the other keys (maximum of three keys). Several seconds may elapse before this message appears.

IMPORTANT:
The maximum delay between each operation is **5 minutes**, otherwise the procedure is cancelled.
Once the UCH is coded, it is impossible to clear or program it with a new code.

SPECIAL CASES

If the screen displays:

– **The After-Sales code entered does not correspond with the key inserted. Check that you have entered the code correctly and you have inserted a key belonging to the vehicle:**
– The code read is incorrect or the UCH has already been coded on another vehicle.

– **The UCH is not blank. Please start the key programming procedure**: The UCH has already been programmed for this vehicle.

– **Check the After-Sales code**: the code entered is incorrect. Check, then try entering the data again,

– **UCH programming failed, key cannot be used on this vehicle:** the key code does not correspond to the code entered (the key belongs to a vehicle from a different range).

– **The key inserted is blank. Please present another key which has already been programmed to this vehicle**: the key is blank, present a key which has already been coded on this vehicle.

KEY ALLOCATION PROCEDURE

IMPORTANT:
If none of the keys are available, it will be necessary to carry out a reallocation procedure for all keys.

Establish dialogue with the UCH computer.

In the menu **Special commands**, validate the command **SC015 Key allocation**.

Key programming is split into 2 parts:

1. Key insertion stage.
2. Key allocation.

IMPORTANT:
Keys which are not presented will no longer be active and will not be able to be used in the key allocation stage. Restart the procedure to reallocate them.

Switch off the ignition and click on Next.

Ensure that you have all the vehicle's keys. Keys not inserted during this procedure will not work.

IMPORTANT:
Only 2 blank keys are authorised via the key allocation procedure.

Switch on the ignition and insert the key to be allocated.

Switch off the ignition.

The tool asks "**Register another key?**".

To allocate additional keys, switch on the ignition for several seconds with the other vehicle keys to be allocated (three maximum) and then validate.

After each additional key allocation, switch off the ignition.

The tool displays "**Vehicle VIN**".

Enter the vehicle VIN.

Enter the programming key below into Code Management with the vehicle VIN.

IMPORTANT:
You now have **60 minutes** to enter the code provided.
DO NOT DISCONNECT THE DIAGNOSTIC TOOL

Enter the immobiliser code found in Code Management.

The tool displays **Command in progress**.

Insert the key to be allocated. It is important not to leave the previously allocated key in the ignition switch. Switch on the ignition and then validate.

The tool displays **Allocation in progress. Do not remove the key**.

Switch off the ignition after allocation has finished.

Insert the next key to be allocated.

It is important not to leave the previously allocated key in the ignition switch. Switch on the ignition and then validate.

The tool displays **Allocation in progress. Do not remove the key**.

Switch off the ignition after allocation has finished.

The tool displays **End of programming procedure**.

AFTER REPAIR	Follow the instructions. Deal with any other faults. Clear the stored faults.

Tool fault	Diagnostic tool title
DF180	Decoder -> ring connection
DF272	Coded line circuit

DF180 PRESENT OR STORED	DECODER -> RING CONNECTION CC.0: Short circuit to earth CC.1: Short circuit to +12 volts

NOTES	**Special note:** Use the **Wiring Diagrams Technical Note for Twizy**.

CC.0	Check the connection and condition of the transponder ring connector, component code **957**. If the connector is faulty and if there is a repair procedure (see **Technical Note 6015A (Renault), Repairing electrical wiring, Wiring: Precautions for repair**), repair the connector, otherwise replace the wiring.
	Check the connection and condition of the UCH connector, component code **645.** If the connector is faulty and if there is a repair procedure (see **Technical Note 6015A (Renault), Repairing electrical wiring, Wiring: Precautions for repair**), repair the connector, otherwise replace the wiring.
	Check the **continuity and insulation to earth** of the following connections: – **80X** between components **645** and **957**. If the connection or connections are faulty and if there is a repair procedure (see **Technical Note 6015A (Renault), Repairing electrical wiring, Wiring: Precautions for repair**), repair the wiring, otherwise replace the wiring.
	If the fault is still present, contact Techline.

AFTER REPAIR	Follow the instructions. Deal with any other faults. Clear the stored faults.

UCH_V09_DF180

DF180 CONTINUED	

CC.1	Check the connection and condition of the transponder ring connector, component code **957**. If the connector is faulty and if there is a repair procedure (see **Technical Note 6015A (Renault), Repairing electrical wiring, Wiring: Precautions for repair**), repair the connector, otherwise replace the wiring.
	Check the connection and condition of the UCH connector, component code **645.** If the connector is faulty and if there is a repair procedure (see **Technical Note 6015A (Renault), Repairing electrical wiring, Wiring: Precautions for repair**), repair the connector, otherwise replace the wiring.
	Check the **continuity** and **insulation to +12 V** on the following connections: – **80X** between components **645** and **957**. If the connection or connections are faulty and if there is a repair procedure (see **Technical Note 6015A (Renault), Repairing electrical wiring, Wiring: Precautions for repair**), repair the wiring, otherwise replace the wiring.
	If the fault is still present, contact Techline.

AFTER REPAIR	Follow the instructions. Deal with any other faults. Clear the stored faults.

DF272 PRESENT OR STORED	CODED LINE CIRCUIT CC.0: Short circuit to earth CC.1: Short circuit to +12 volts

NOTES	**Special note:** Use the **Wiring Diagrams Technical Note for Twizy**.

Check the connection and condition of the connector of the inverter power electronic block, component code **1063**. If the connector is faulty and if there is a repair procedure (see **Technical Note 6015A (Renault), Repairing electrical wiring, Wiring: Precautions for repair**), repair the connector, otherwise replace the wiring.
Check the connection and condition of the UCH connector, component code **645**. If the connector is faulty and if there is a repair procedure (see **Technical Note 6015A (Renault), Repairing electrical wiring, Wiring: Precautions for repair**), repair the connector, otherwise replace the wiring.
Check the **continuity** and **insulation** of the following connection: • **H17** between components **645** and **1063** If the connection is faulty and if there is a repair procedure (see **Renault Technical Note 6015A, Repairing electrical wiring, Wiring: Precautions for repair**), repair the wiring, otherwise replace the wiring.
If the fault is still present, contact Techline.

AFTER REPAIR	Follow the instructions. Deal with any other faults. Clear the stored faults.

UCH_V09_DF272

NOTES	Only carry out a conformity check after a **complete check** with the diagnostic tool. The values shown in this conformity check are given as examples. Application condition: **engine off, ignition on**.

SUB-FUNCTION: STARTING

Function	Parameter or Status checked or Action		Display and notes	Fault finding
Power supply	**ET004**	**+ 12 V** after ignition feed	**YES** **NO**	**In the event of a fault,** consult the interpretation of status **ET004 (see 87B, Passenger compartment connection unit)**.
Engine immobiliser	**ET184:**	Valid key code	**YES** when the ignition is switched on **NO** before the ignition is switched on	**In the event of a fault**, apply the interpretation of status **ET184**.
	ET185	Key code received	**YES =** If the UCH has received the immobiliser code from the key **NO =** If the UCH does not receive the immobiliser code from the key	In the event of a fault, apply the interpretation of status ET185
	ET549:	Immobiliser active	**YES** **NO**	**In the event of a fault**, apply the interpretation of status **ET549**.
	ET127:	Immobiliser warning light	**LIT** **OFF**	**In the event of a fault,** apply the interpretation of status **ET127 (see 87B, Passenger compartment connection unit)**.

NOTES	Only carry out a conformity check after a **complete check** with the diagnostic tool. The values shown in this conformity check are given as examples. Application condition: **engine off, ignition on**.

SUB-FUNCTION: STARTING (CONTINUED)

Function	Parameter or Status checked or Action		Display and notes	Fault finding
Key	**PR056:**	Number of keys allocated	**2 keys** on leaving the factory, programming of up to **4 keys** in After-Sales	**In the event of a fault**, apply the interpretation of parameter **PR056**.
Engine immobiliser	**AC003:**	Immobiliser warning light	This command is used to illuminate the immobiliser warning light	**In the event of a fault**, refer to the procedure for command **AC003 (see 87B, Passenger Compartment Connection Unit)**.

NOTES	Only carry out a conformity check after a **complete check** with the diagnostic tool. The values shown in this conformity check are given as examples. Application condition: **engine off, ignition on**.

SUB-FUNCTION: ACCESS

Function	Parameter or Status checked or Action		Display and notes	Fault finding
Power supply	**ET004**	**+ 12 V** after ignition feed	**YES** **NO**	**In the event of a fault,** consult the interpretation of status **ET004 (see 87B, Passenger compartment connection unit)**.
Speed	**PR008**	Vehicle speed	**X in mph**	**In the event of a fault,** run a test on the computer which gives the vehicle speed signal (see **83A Instrument panel**)

It is possible to determine the fault on a vehicle by means of the various pieces of information provided by checking the statuses.

ET004: **+ 12 V** after ignition
ET185: Key code received
ET184: Key code valid
ET549: Immobiliser active

If	**ET004** status **YES** **ET185** status **YES** **ET184** status **YES** **ET549** status **NO**	Check the inverter power electronic block using the diagnostic tool and check that the inverter power electronic block is not locked. Check the UCH - inverter power electronic block communication
If	**ET004** status **YES** **ET185** status **YES** **ET184** status **NO** **ET549** status **YES**	The coded key does not belong to the vehicle. If the key does belong to the vehicle, reallocate the keys. If the key still does not work, replace the key.
If	**ET004** status **YES** **ET185** status **NO** **ET184** status **NO** **ET549** status **YES**	The key is out of order or does not correspond with the type of vehicle.

Tool status	Diagnostic tool title
ET184	Valid key code
ET185	Key code received
ET549	Immobiliser active

Tool parameter	Diagnostic tool title
PR056	Number of keys allocated

PR056	NUMBER OF KEYS ALLOCATED

NOTES	Check that no fault is **present**.

This parameter indicates the number of keys allocated to the vehicle. The maximum number of allocated keys is 4.
In the event of a fault, perform fault finding on the UCH (see **87B, Passenger compartment connection unit**).

AFTER REPAIR	Follow the instructions. Deal with any other faults. Clear the stored faults.

Tool command	Diagnostic tool title
SC003	Reserve
SC015	Key allocation

SC003	SPARE

Essential equipment
CLIP

This command is used to recover a code which will allow the Techline to supply the After-Sales code.

Recovery procedure for Reserve code:
– Establish dialogue with the UCH.
– Select the menu **Repair mode**.
– Select the menu **Programming**.
– Select the line **SC003 Spare.**

Follow the instructions on the **Clip diagnostic tool**.

AFTER REPAIR	Follow the instructions. Deal with any other faults. Clear the stored faults.

UCH_V09_SC003

SC015	ALLOCATE KEY

Essential equipment
CLIP

This key allocation operation enables you to assign keys to the vehicle.

To add one or more keys, replace one or more keys, de-allocate one or more keys (in the event of theft for example).

WARNING
It is not possible to allocate more than two blank keys per operation.
If more than two keys must be allocated: program 2 blank keys then repeat the procedure with all the keys.

Before starting this operation, check that there are no components likely to interfere with the electromagnetic field (for example: CB (Citizen Band), mobile phones, etc.).

WARNING
If not all of the keys are available, all the keys will have to be reallocated. Keys not inserted will no longer be allocated to this vehicle.

WARNING
The only keys which can be submitted are those ordered for the vehicle concerned, or the vehicle's old keys.

AFTER REPAIR	Follow the instructions. Deal with any other faults. Clear the stored faults.

UCH_V09_SC015

SC015 CONTINUED 1	

WARNING
Do not interrupt the procedure when it is in progress.
If it is interrupted, restart the procedure in "not connected mode"; a new programming key will be displayed.

The UCH must **not be blank** in order to be able to program keys.
With this system it is not possible to replace some components, such as the UCH and the key as these parts are sold blank and uncoded.

WARNING
When the programming operation is complete, only remove the key once the **Remove key** message is displayed on the screen. Otherwise the programming operation fails and the key will be unusable.

WARNING
When the tool issues the programming key, the user has a limited time in which to enter the immobiliser code.
If the time has elapsed, the CLIP tool displays the message: **Time elapsed. Restart the procedure**.

AFTER REPAIR	Follow the instructions. Deal with any other faults. Clear the stored faults.

SC015 CONTINUED 2	

Key allocation procedure
– Establish dialogue with the UCH.
– Select the menu **Repair mode**.
– Select the menu **Programming**.
– Select line **SC015 Allocate key.**

The procedure for allocating keys is divided in two parts:
1. Key insertion stage.
2. Key allocation stage.

1. Key insertion stage

Clip requires that the keys to be allocated are inserted.
Insert ALL the keys to be allocated (old and new blank keys). Any keys not inserted at this stage will be rejected at the **Key allocation** stage and the operation will have to be restarted from the beginning.
Once all the keys are inserted, the **Clip diagnostic tool** displays the programming key in "not connected" mode.
To obtain the immobiliser code, (see **Technical Note 5037A, Code delivery procedure**).

WARNING
In "not connected" mode, the programming key can only be used for a limited amount of time, as indicated by the **CLIP diagnostic tool**. After this time, the programming key and associated immobiliser code are no longer valid. The operation must be restarted from the beginning.

2. Key allocation stage:

Continue the procedure following the instructions on the **Clip diagnostic tool**.
Once the keys have been allocated, make sure that all the keys can lock and start the vehicle.

AFTER REPAIR	Follow the instructions. Deal with any other faults. Clear the stored faults.

	Type	S/Section
All types	**XXX X**	**82A**

This note cancels and replaces Technical Note 3315E, part no. 77 11 206 336 and previous versions of Technical Note 5037A

01B-82A-87B-86A-86C **CODE SUPPLY PROCEDURE**

- Engine: **XXX**
- Gearbox: **XXX**

Basic manual:

"The repair procedures given by the manufacturer in this document are based on the technical specifications current when it was prepared.

The procedures may be modified as a result of changes introduced by the manufacturer in the production of the various component units and accessories from which his vehicles are constructed."

All rights reserved by **Renault s.a.s.**

Copying or translating, in part or in full, of this document or use of the service part reference numbering system is forbidden without the prior written authority of **Renault s.a.s.**

© Renault s.a.s. 2012

CONTENTS

Page
0 Introduction ... 2
1 Access to code management ... 5
2 Searching for a code in GDC ... 5
2.1 Immobiliser code ... 5
2.1.1 Old procedure ... 6
2.1.2 New procedure ... 7
2.1.3 Error messages and procedures to follow ... 8
2.1.4 Emergency procedure ... 10
2.2 Radio code ... 11
2.2.1 "Enter pre-code" error screen ... 12
2.2.2 Finding the radio pre-code ... 13
2.2.3 The code supplied is not correct ... 13
2.2.4 Old radios without pre-code ... 14
2.3 Video control code ... 16
2.4 Tool reprogramming key ... 17

0) Introduction

Since 1st June 2005 there has been a single service available for supplying the following codes:

- Engine immobiliser
- Radio
- Video network
- Reprogramming key (NRE)

This service is Code Management (GDC) on RENAULT NET or importers' RENAULT NET.

Information required for use:

Immobiliser code:
VIN (17 characters)
number marked on the key head (old vehicles, 8 characters maximum)
Programming key supplied by diagnostic tool (new vehicles, 24 characters)

> Note:
> The programming key is obligatory from CLIP CD65, i.e. from June 2006.

Radio code:
VIN (17 characters)
Pre-code or serial number of the radio

Radio pre-code if the first code obtained using the VIN is not correct
Pre-code = 1 letter + 3 digits
Refer to the detailed procedure §2.2.2 "Finding the radio pre-code"

Radio without pre-code:
Radio manufacturer: Philips/Blaupunkt/Pioneer/Alpine/Becker

Video control code specific to Vel Satis:
VIN of the vehicle (17 characters)
Four-digit code supplied by the video control
Refer to the corresponding repair manual.

Reprogramming key (only in disconnected mode):
*Note: this key is an authorisation code provided by the diagnostic tool to the operator in order to obtain the reprogramming key from the code server.
VIN of the vehicle (17 characters)
Reprogramming key supplied by the diagnostic tool

WARNING
Access to the "code management" application is restricted to authorised personnel.
To use the code server, access rights are required.
These access rights (certificate) are integrated into the Tokens.
All code requests are recorded in a database. This database can be accessed by the police authorities.
Any member of personnel found to be making fraudulent use of management codes will be subject to corporate and legal proceedings.

Using the Code Management server to find codes:

1) Main menu in Renault Net, under Applications you will find Code Management:

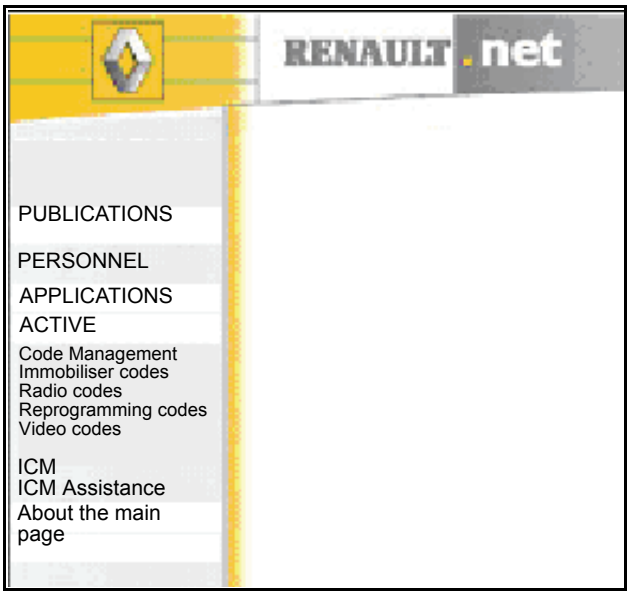

2) Finding a code in Code Management:
2.1 Immobiliser code:

> **Note:**
> To find out whether a vehicle is governed by the old or the new procedure, just start the programming procedure using your diagnostic tool. If the tool displays a **programming key**, this vehicle is governed by the new procedure.

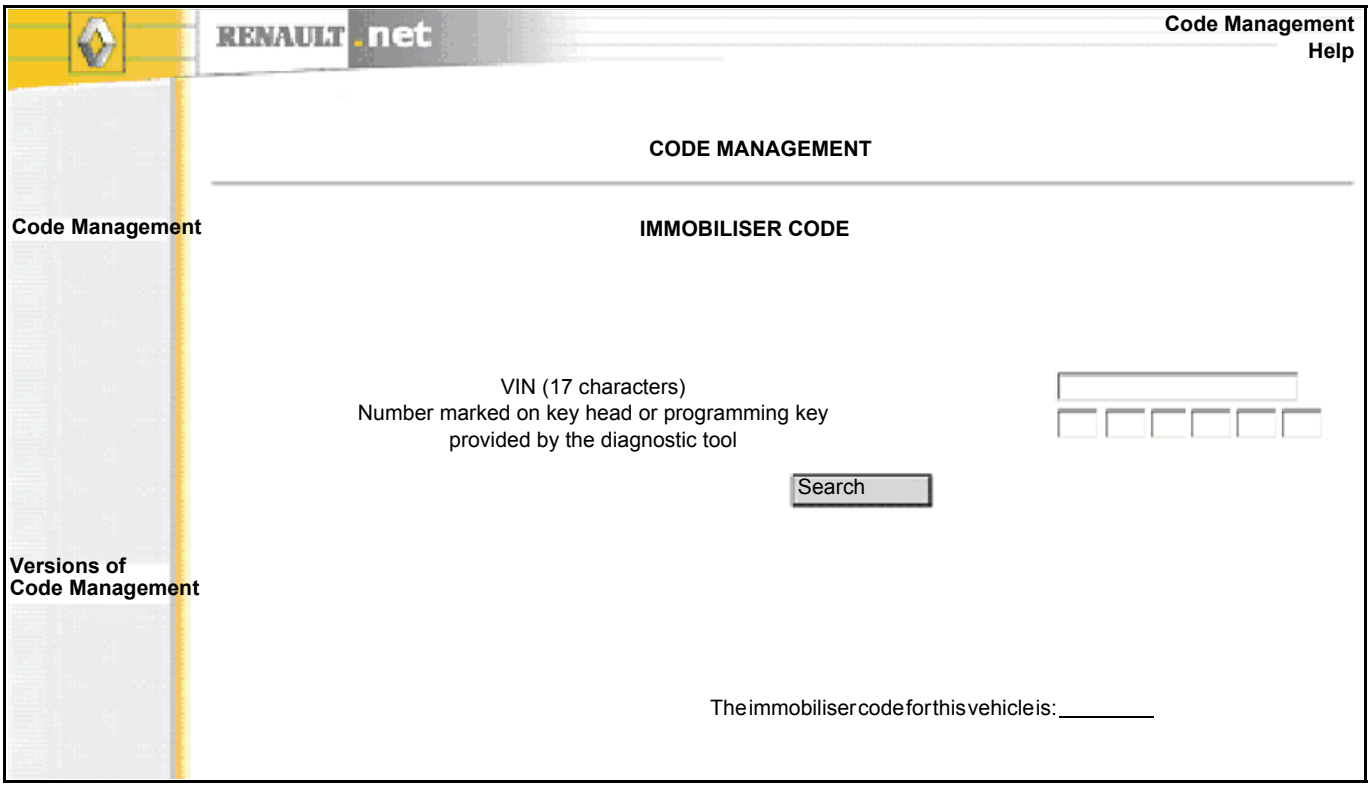

2.1.1 Old procedure

– Enter the VIN
– Confirm with the "Search" button
– Immobiliser code supplied in the following form:
  4 digits (old vehicles)
  8 digits (MEGANE 1 and AVANTIME only)
  12 characters (digits and letters for other vehicles)

If the immobiliser code supplied is not correct and you have the key head number, resubmit your request with the same VIN and **key head number**:

> **Note:**
> The key head number is required for old vehicles; if the four-digit code supplied by the code server does not correspond to the vehicle, the key head code is used to recalculate the new four-digit code.

– Re-enter the VIN of the vehicle
– Enter the key head number (marked on the key head) 8 characters maximum (5 figures or 7 alphanumeric characters, or even 8 alphanumeric characters)
– Confirm with the "Search" button
– The immobiliser code (4 figures) is supplied

2.1.2 New procedure:
This new procedure affects vehicles from LAGUNA II, and new vehicles.
This has been compulsory since June 2006.

In disconnected mode:
– Enter the VIN + programming key supplied by the diagnostic tool.
– Confirm with the "Search" button
– The immobiliser code is supplied in the form of programming keys of 24, 40 or 28 characters, then supplied in the form of 13, 34 or 39 characters

In connected mode:
– The immobiliser code can be searched for and supplied automatically via the diagnostic tool.

2.1.3 Error messages and procedure to follow

MANAGEMENT CODE ERROR MESSAGE	PROCEDURE TO FOLLOW
All vehicles	
The VIN is not found on the World Vehicle Database	Re-enter the VIN. If the fault is still present, contact the Techline.
The diagnostic tool programming key is compulsory.	The vehicle corresponding to the VIN entered is subject to the new procedure described in paragraph 2.1.2. CLIP version 65 or a more recent version is required.
A new code cannot be supplied.	contact your technical assistance network
Old procedure	
The immobiliser code cannot be obtained by entering the VIN alone. For old vehicles with a four-digit security code, you must enter the code marked on the key head in addition to the VIN. If no number is marked on the key head, contact your technical assistance network	The immobiliser code cannot be obtained from the server; the key head code is required to calculate the immobiliser code. Open the key head to obtain the key head code. If the code does not appear on the key head, check the customer documents (e.g. invoice) to find the code. If this number cannot be found, contact your technical assistance network quoting the error message.
The immobiliser code cannot be obtained with values entered. Check that the values are correct. If they are correct, contact your technical assistance network	If the key head code is incorrect, the immobiliser code cannot be calculated by the server. Check the key head code.
New procedure	
1. Check the programming key. 2. Check that the VIN from the CLIP main menu is correct.	The programming key does not correspond to the VIN entered. 1. Check the programming key (6 x 4 characters); the programming key does not contain: the letters O and Q as these may be confused with the number 0 the letter I as it may be confused with the number 1. 2. In the CLIP main menu, enter the correct VIN of the vehicle (17 characters)

2.1.3 Error messages and procedure to follow (continued)

MANAGEMENT CODE ERROR MESSAGE	PROCEDURE TO FOLLOW
New procedure (continued)	
The Renault card (or key) stored by CLIP in the "insertion" section of the programming scenario cannot be found on the server. 1. Check the programming key. 2. Check that the Renault card (or key) was ordered directly by the production workshop in France with the VIN (new procedure). 3. Check that the Renault card (or key) corresponds to the vehicle (the VIN is included on the document supplied with the part).	1. Check the programming key. 2. Renault cards and keys must be ordered according to the new procedure: from June 2006, directly from the central manufacturing workshop (in France), with the vehicle's VIN. The Renault cards and keys can only be used with the VIN for which they have been ordered. The VIN is written on the sheet attached to the packet containing the part. 3. If the fault is still present, contact the Techline.
The immobiliser code is not available on the database. follow the emergency procedure (see 2.1.4)	Check the VIN and the programming key. If the fault is still present, follow the emergency procedure (see 2.1.4).
Another immobiliser chain computer has recently been programmed on this vehicle. You are not authorised to perform this operation. Follow the emergency procedure (see 2.1.4).	1. Check the programming key. 2. Restart the procedure with CLIP. 3. If the fault is still present, follow the emergency procedure (see 2.1.4)

2.1.4 Emergency procedure

From 2007, the help mail will be replaced by a text file.
Once the code has been requested, a button will appear: "create a text file".
This creates a text file which can be saved to the hard drive or to a mobile device.

In the event of a fault, this text file contains all the information needed by the Techline :

- The VIN
- the key head code or programming key
- the message displayed

It is recommended that you use this text file to contact your technical assistance network.

2.2 Radio code:

– Enter the VIN only
– Confirm with the "Search" button
– Radio code supplied

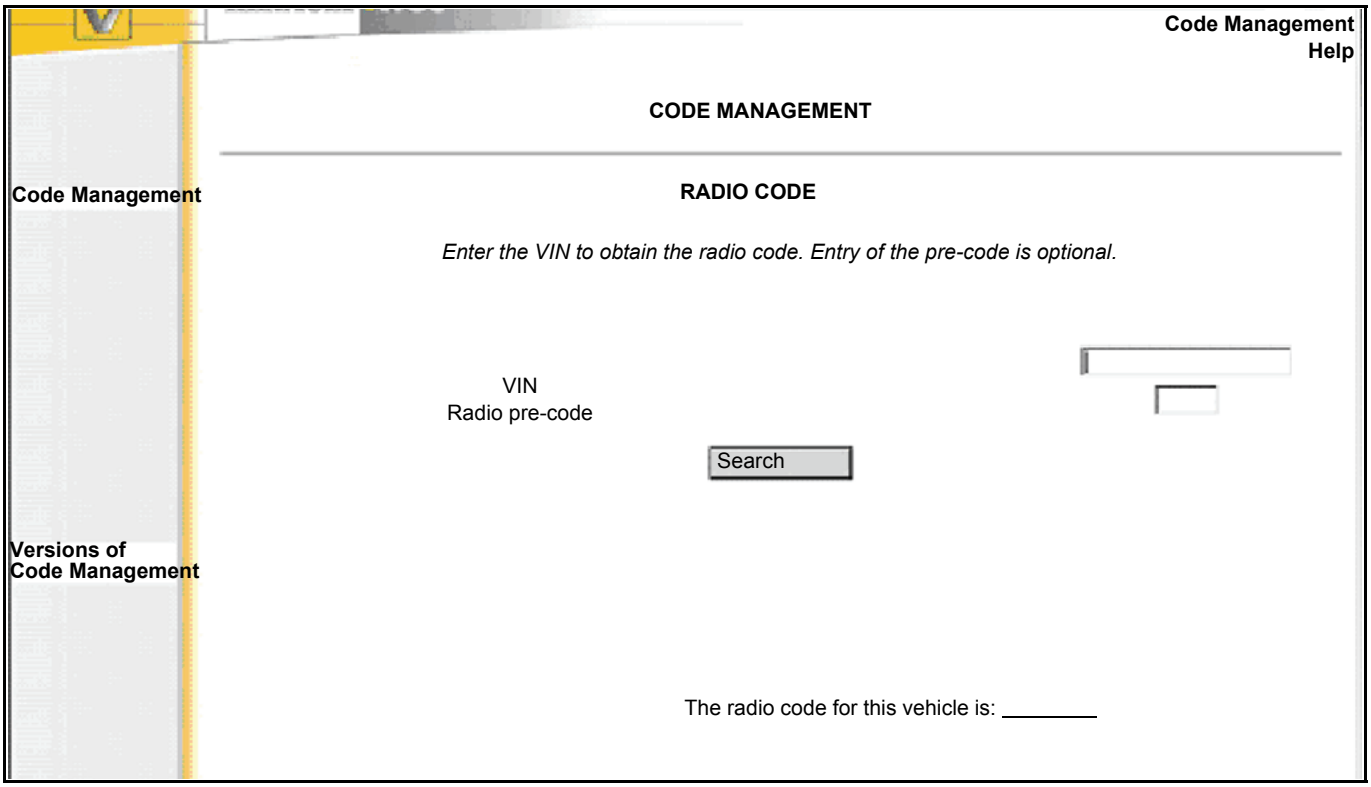

WARNING
It is not possible to obtain more than three radio codes for a single VIN.
The error message reads "A new code cannot be supplied".

2.2.1 "Enter pre-code" error screen

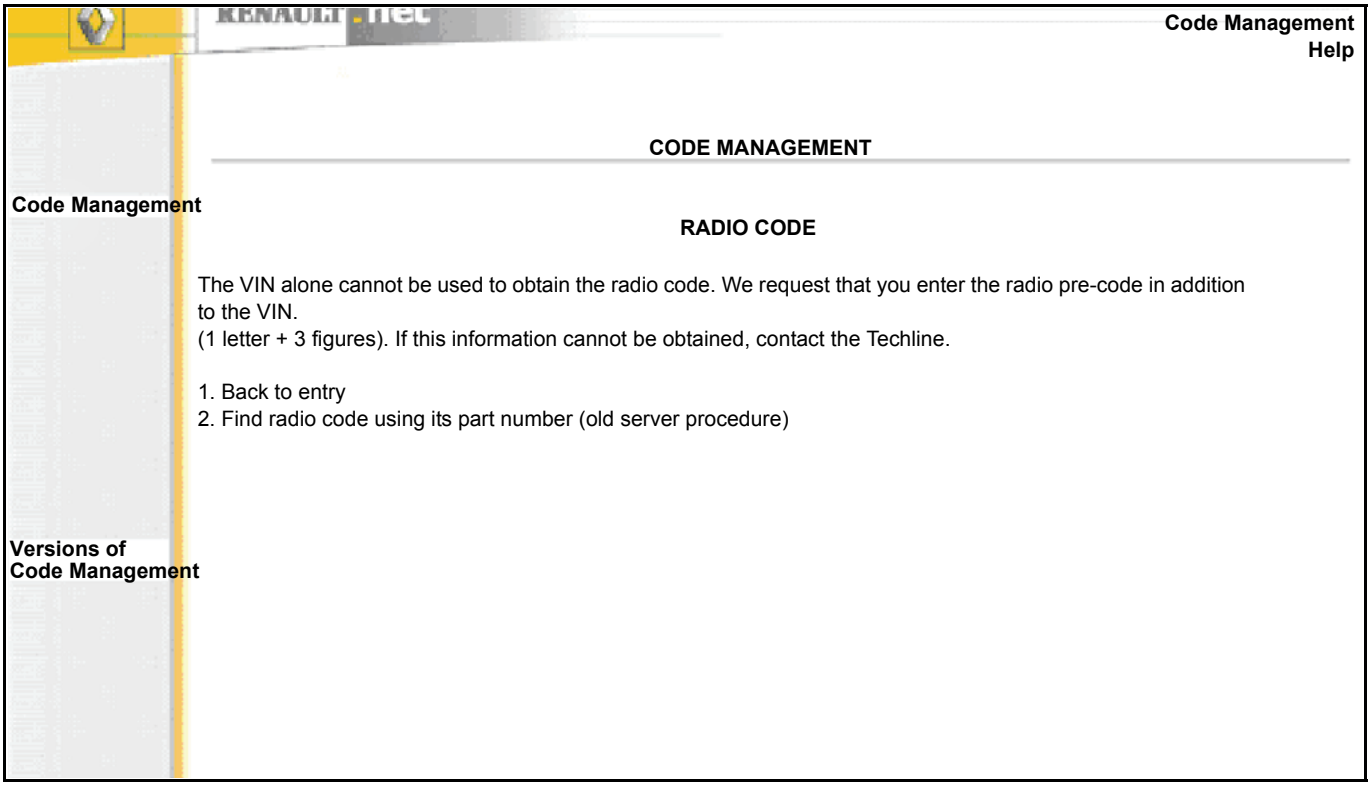

The radio code cannot be supplied by the server; the radio pre-code is required to calculate the radio code.
To find the radio pre-code, see paragraph 2.2.2.

Once you have obtained the pre-code:
– Select option no. 1: "Return to entry"
– Enter the radio pre-code
– Confirm with the "Search" button
– Radio code supplied

Option no. 2, "Find radio code using its part number (old server procedure)" refers to old radios without a pre-code, see paragraph 2.2.4.

2.2.2 Finding the radio pre-code

Depending on the type of radio, recover the pre-code, either:
- from the radio display using the self-test procedure,
- by removing the radio; the pre-code is found on the label affixed to the radio.
- Vehicles with ITS Navigation: it is necessary to use the diagnostic tool obtain the pre-code

Note:
The pre-code consists of a letter and three digits (example below, N557).

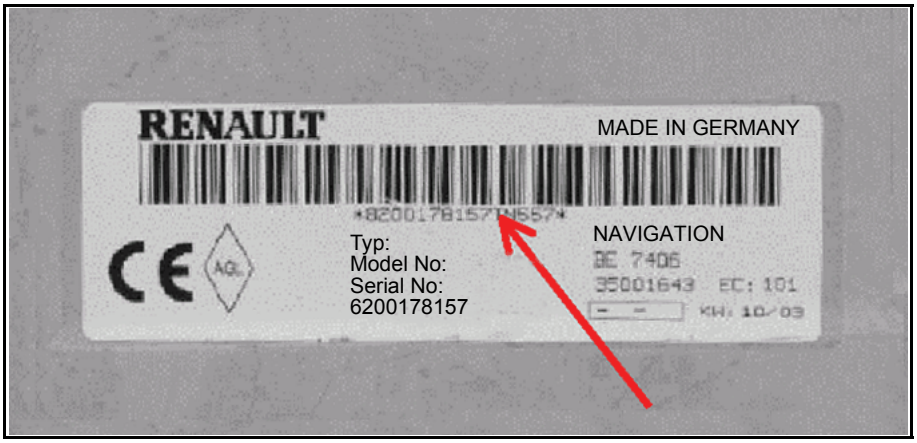

The pre-code is found after the Renault part number (8200 XXX XXX or 7700 XXX XXX) and the letter T

Example above: 8200178157T**N557**

2.2.3 The code supplied is not correct

If the code supplied from the first request with the vehicle VIN alone is not accepted by the radio, resend your request with the radio pre-code (paragraph 2.2.2).
– Re-enter the VIN of the vehicle
– Enter the radio pre-code
– Confirm with the "Search" button
– New radio code supplied

2.2.4 Old radios without pre-code:

To find a radio code using the radio part number (old minitel and voice server procedures), select:
"Find radio code using its part number (old server procedure)".

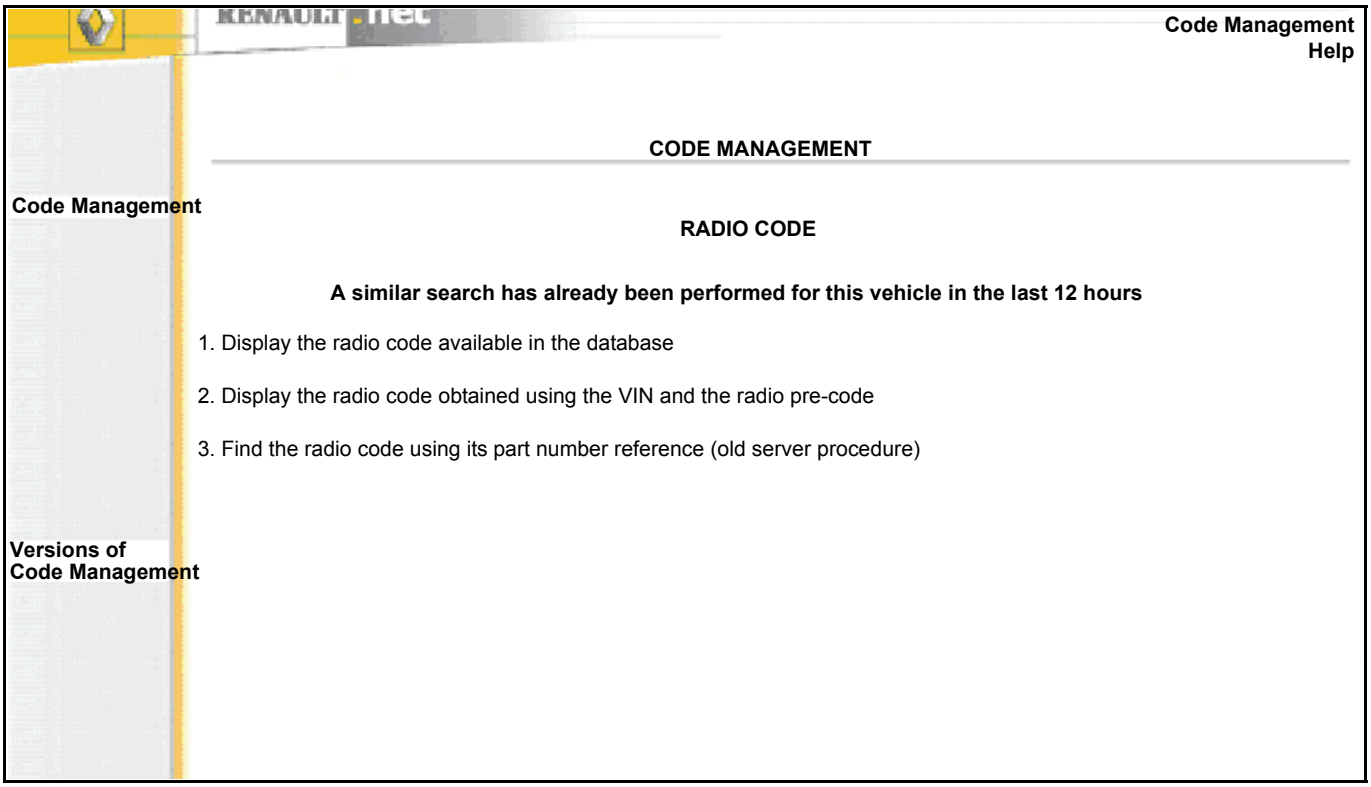

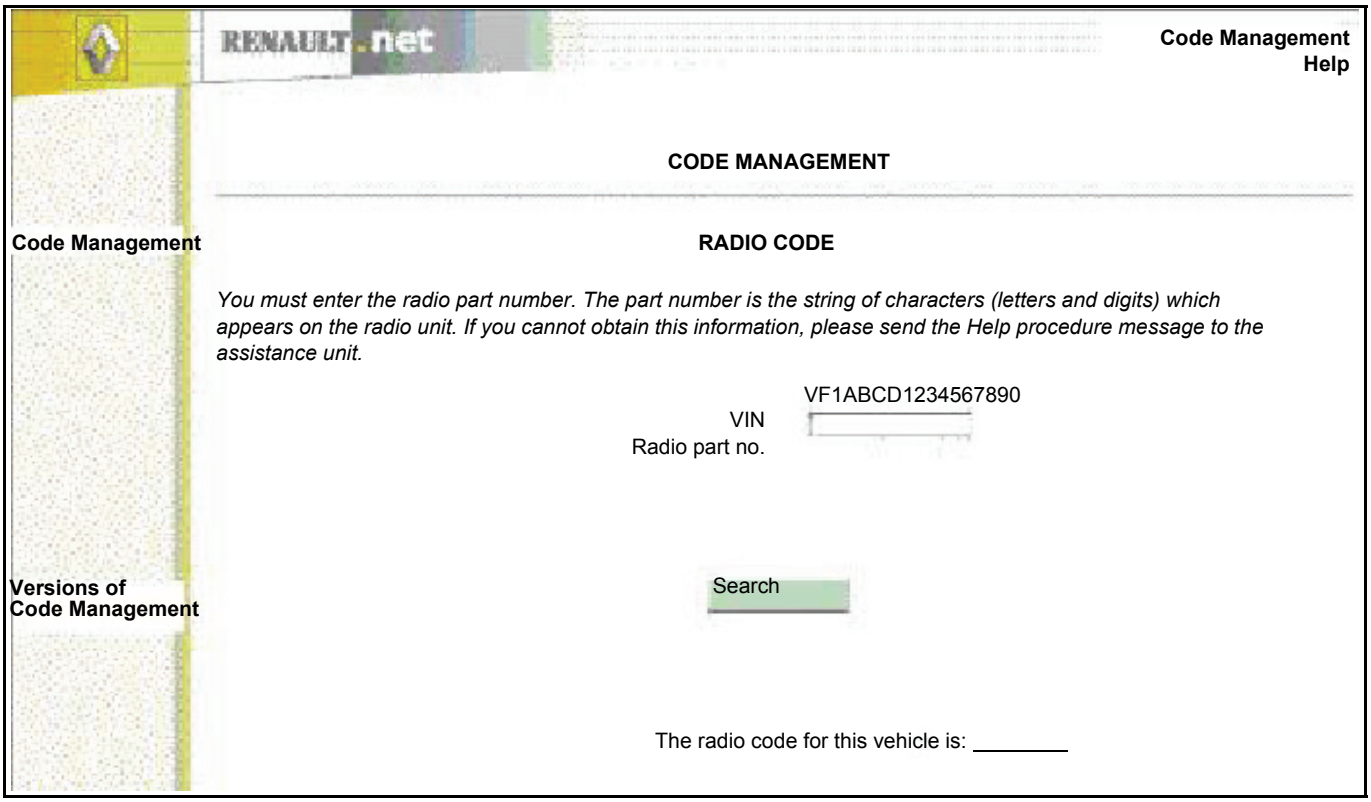

– Enter the radio part number in the "Radio part number" field

Example:

Radio part no.:
Philips = RN + 3 digits + 2 letters + 7 digits
Blaupunkt = BP + 4 digits + 1 letter + 7 digits
Pioneer = RN2006 + 1 letter + 7 digits or 1 letter + 7 digits (old models)
Alpine = AL + 9 digits
Becker = B or E + 7 digits

– Confirm with the "Search" button
– Radio code supplied

2.3 Video network code

– Enter the VIN of the vehicle
– Enter the four-digit code generated by the vehicle's video control
– Confirm with the "Calculate" button
– Four-digit code supplied by the code server

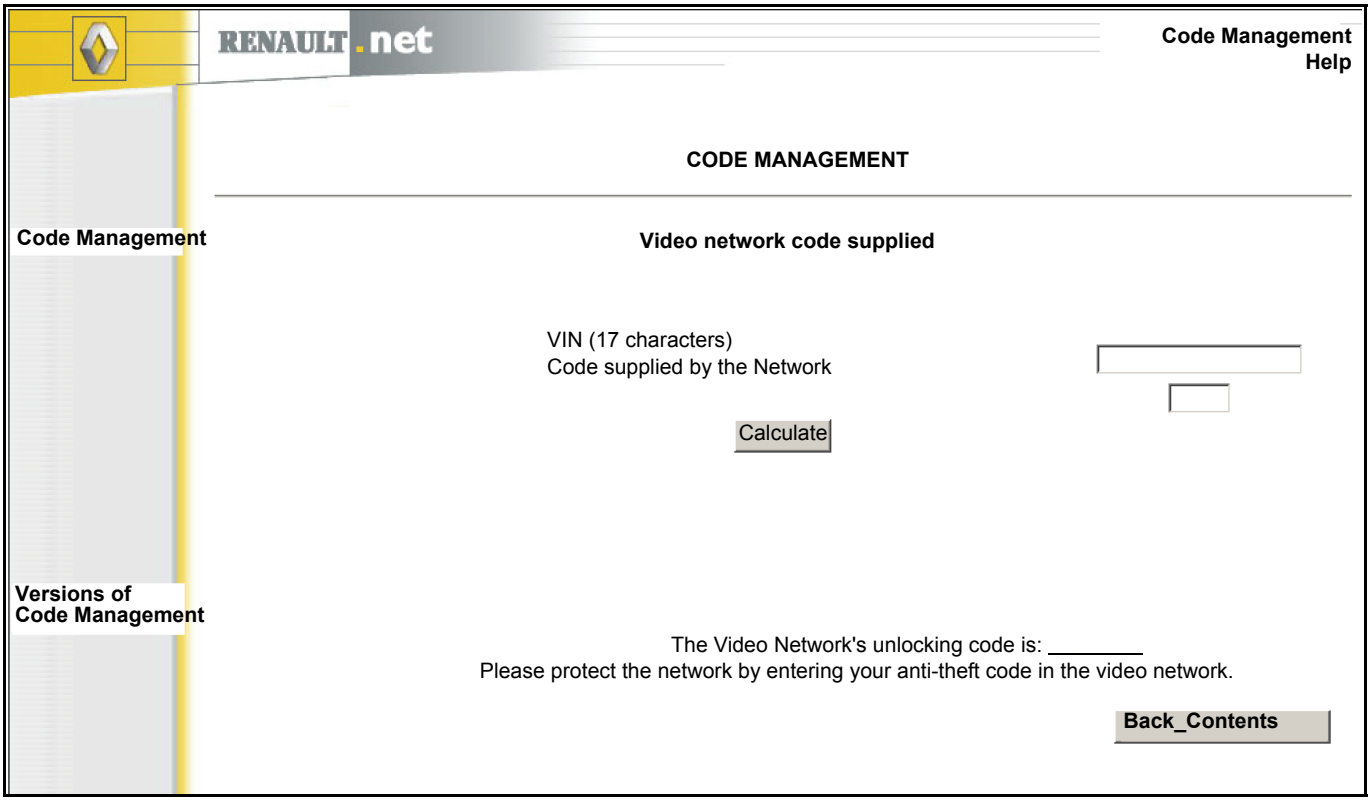

2.4 Tool reprogramming key:

– Enter the VIN of the vehicle
– Enter the six-digit code generated by the diagnostic tool
– Confirm with the "Calculate" button
– Six-character (letters and digits) reprogramming key supplied, to be entered in the diagnostic tool.

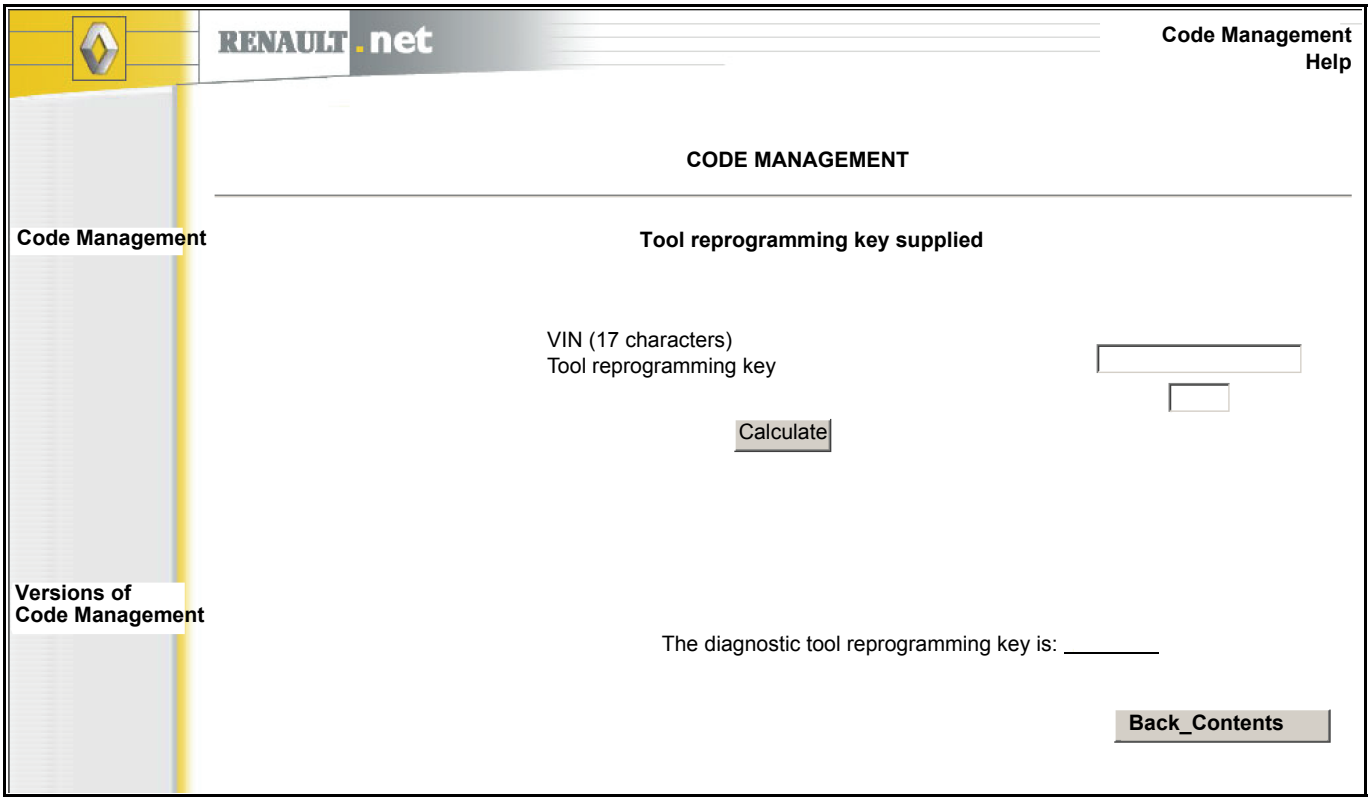

ENGINE-GEARBOX UNIT SUPPORT ASSEMBLY: EXPLODED VIEW

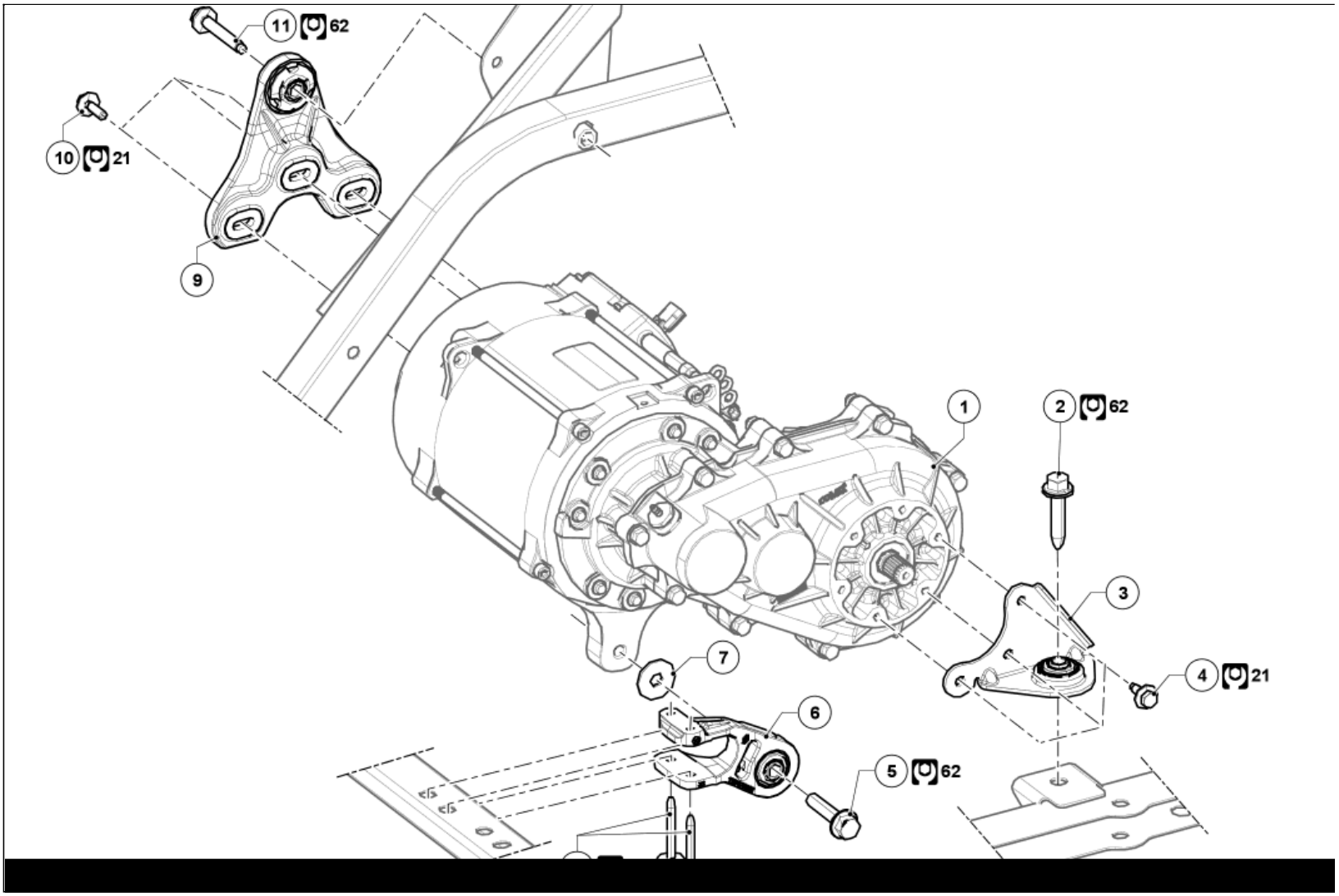

Illustration key: Description .

Marks	Designations	Informations
1	Electric traction motor-reduction gearing assembly	
2	Left-hand suspended engine mounting rubber pad bolt	
3	Left-hand suspended engine mounting support	(see 19D, Engine mounting, Left-hand suspended engine mounting: Removal - Refitting)
4	Left-hand suspended engine mounting support bolts	
5	Front suspended engine mounting rubber pad bolt	
6	Front suspended engine mounting support	Removal of the engine undertray is needed
7	Front suspended engine mounting support washer	
8	Front suspended engine mounting support bolts	
9	Right-hand suspended engine mounting support	(see 19D, Engine mounting, Right-hand suspended engine mounting: Removal - Refitting)
10	Right-hand suspended engine mounting support bolts	
11	Right-hand suspended engine mounting rubber pad bolt	

EXTERIOR BODY FRONT TRIM ASSEMBLY: EXPLODED VIEW

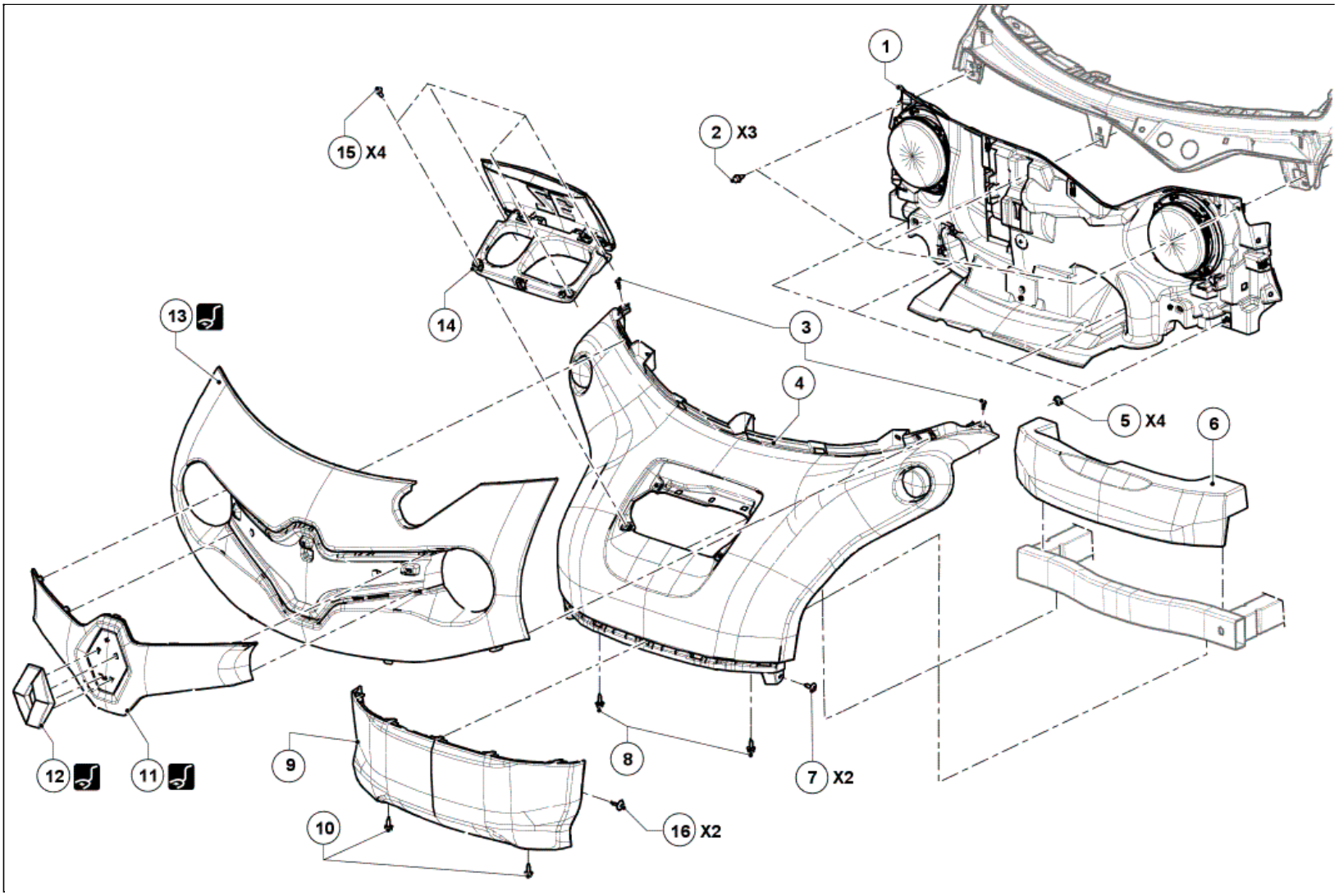

Illustration key: Description .

For fastenings with no specified tightening torque values, refer to the Table of Standard TorquesTightening torques: General information .

Marks	Designations	Informations
1	Front end panel	(see 55A, Exterior protection, Vehicle trim : Removal - Refitting)
2	Front end panel screws	
3	Front bumper trim upper screws	
4	Front bumper trim	(see 55A, Exterior protection, Vehicle trim : Removal - Refitting)
5	Front end panel nuts	
6	Front impact absorber	
7	Front bumper trim side screws	
8	Front bumper trim lower screws	
9	Front bumper lower trim	(see 55A, Exterior protection, Vehicle trim : Removal - Refitting)
10	Front bumper lower trim screws	
11	Upper radiator grille	(Car. 1363) (see 55A, Exterior protection, Vehicle trim : Removal - Refitting)
12	Front badge	(Car. 1363)
13	Front bumper upper strip	(Car. 1363) (see 55A, Exterior protection, Vehicle trim : Removal - Refitting)
14	Traction battery charging plug flap	
15	Traction battery charging plug flap screws	
16	Front bumper lower trim clips	

EXTERIOR BODY REAR TRIM ASSEMBLY : EXPLODED VIEW

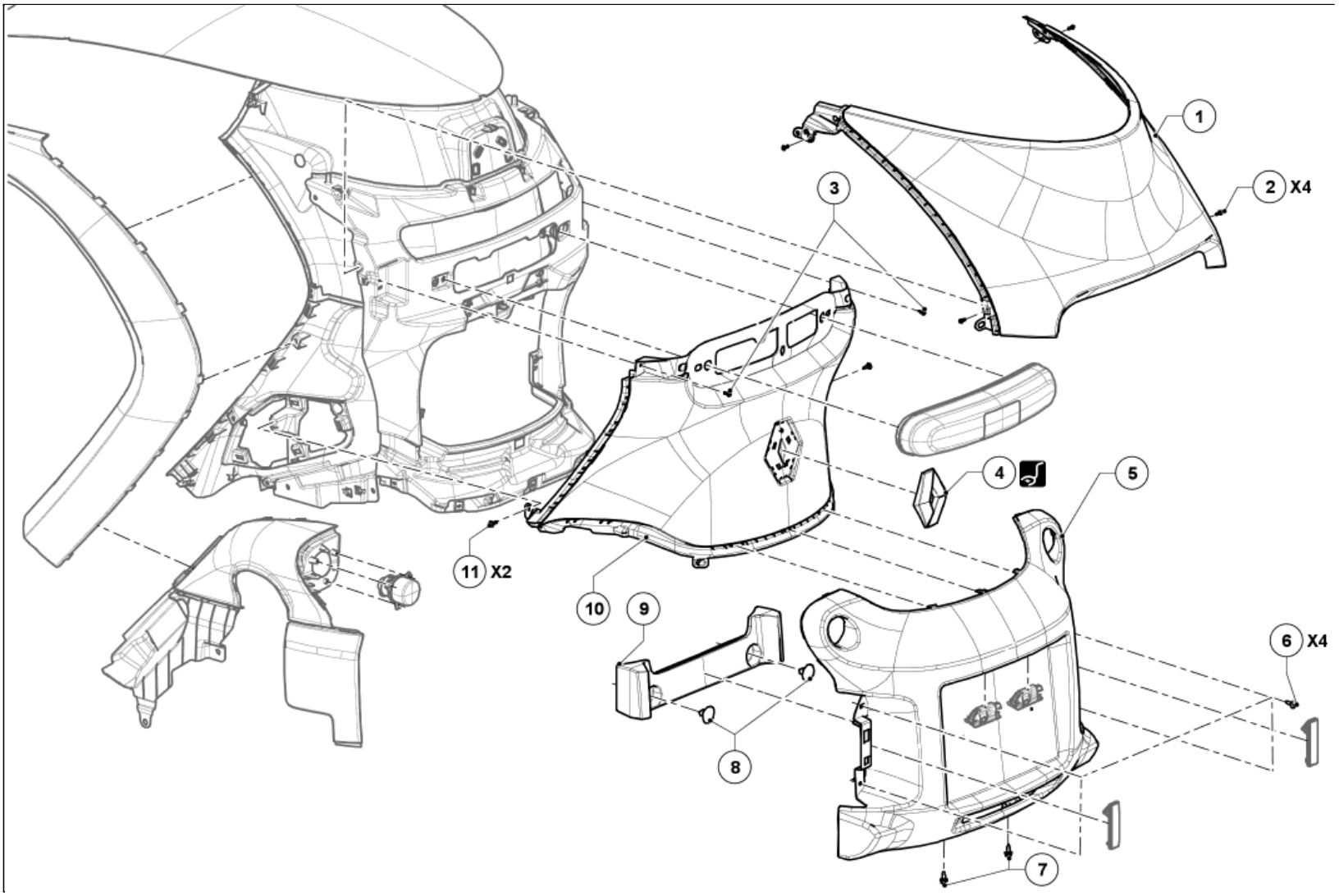

Illustration key: Description .

For fastenings with no specified tightening torque values, refer to the Table of Standard TorquesTightening torques: General information .

Marks	Designations	Informations
1	Roof rear section	(see 55A, Exterior protection, Vehicle trim : Removal - Refitting)
2	Roof rear section screws	
3	Rear bumper upper strip trim upper screws	
4	Rear badge	(Car. 1363)
5	Rear bumper trim	(see 55A, Exterior protection, Vehicle trim : Removal - Refitting)
6	Rear bumper trim upper screws	
7	Rear bumper trim lower screws	
8	Rear impact aborber clips	
9	Rear impact aborber	
10	Rear bumper upper strip trim	(see 55A, Exterior protection, Vehicle trim : Removal - Refitting)
11	Rear bumper upper strip trim side screws	

EXTERIOR BODY SIDE TRIM ASSEMBLY: EXPLODED VIEW

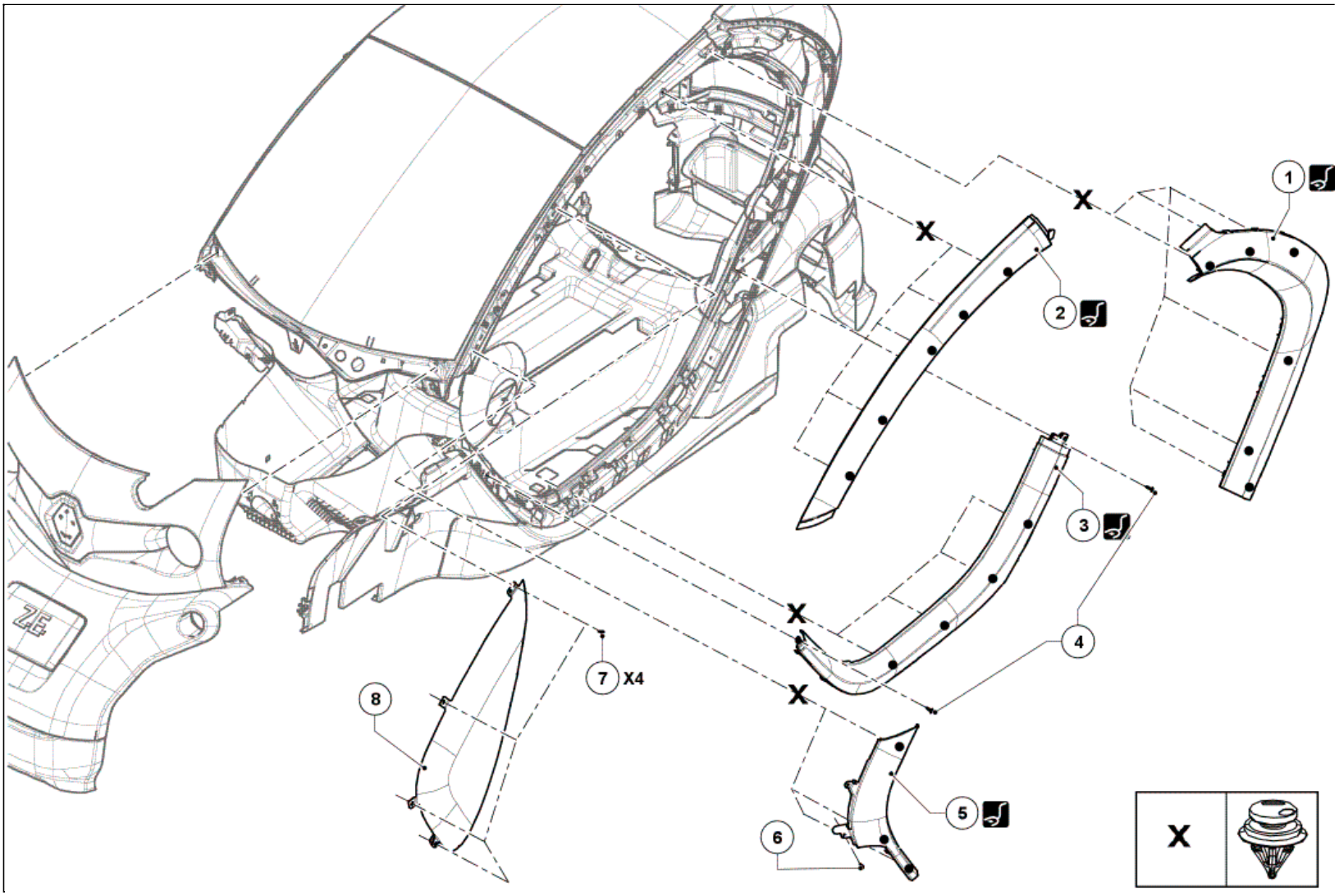

Illustration key: Description .

For fastenings with no specified tightening torque values, refer to the Table of Standard TorquesTightening torques: General information .

Marks	Designations	Informations
1	B-pillar trim	(Car. 1363) Vehicle trim : Removal - Refitting
2	Roof front section trim	(Car. 1363) Vehicle trim : Removal - Refitting
3	Body side trim	(Car. 1363) Vehicle trim : Removal - Refitting
4	Body side trim screws	
5	A-pillar trim	(Car. 1363) Vehicle trim : Removal - Refitting
6	A-pillar trim screw	
7	Windscreen side window screws	
8	Windscreen side window	Vehicle trim : Removal - Refitting

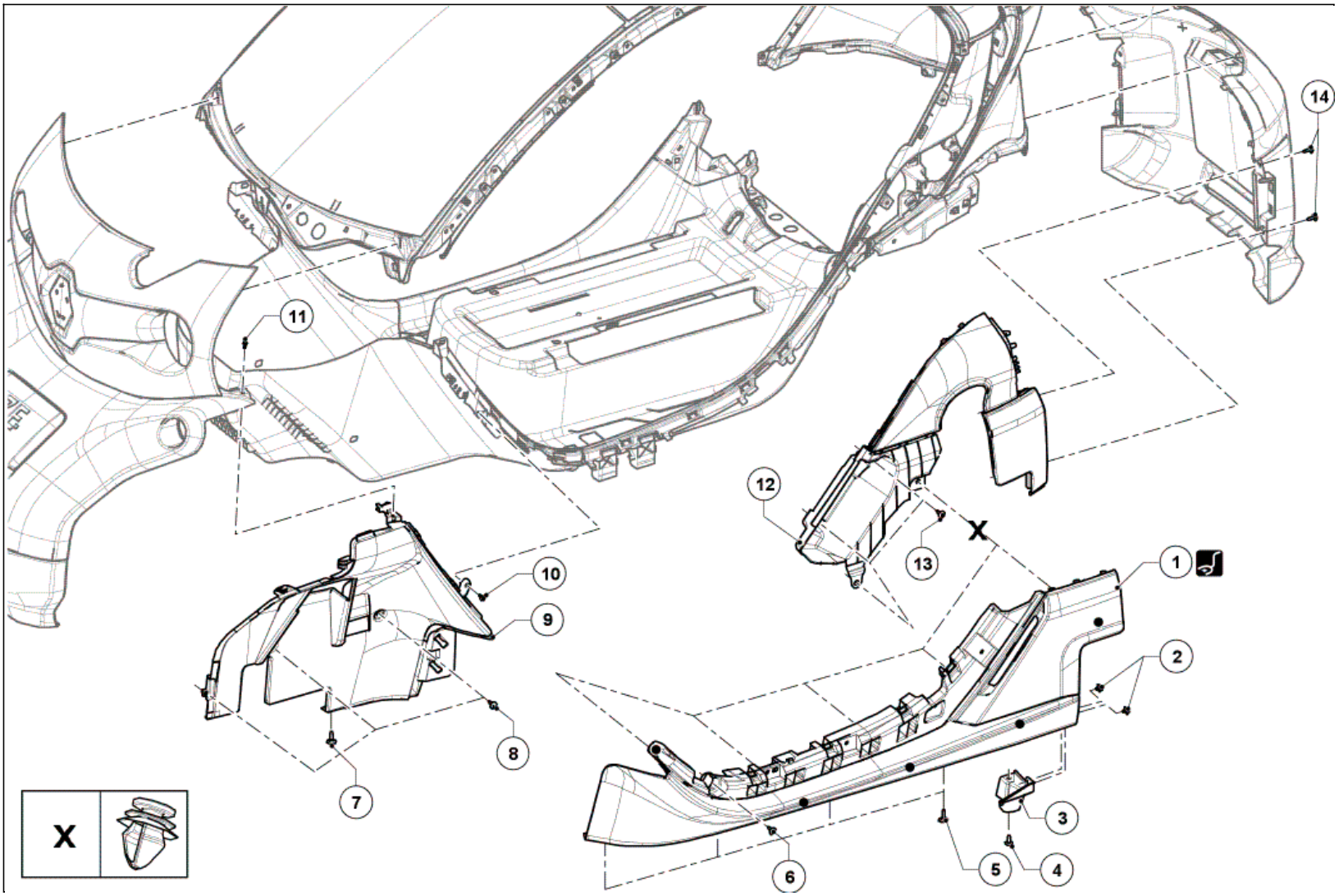

Illustration key: Description .

For fastenings with no specified tightening torque values, refer to the Table of Standard TorquesTightening torques: General information .

Marks	Designations	Informations
1	Sill panel extension	(Car. 1363) Vehicle trim : Removal - Refitting
2	Aerodynamic deflector clips	
3	Aerodynamic deflector	
4	Aerodynamic deflector screw	
5	Sill panel extension screws	
6	Sill panel extension screws	
7	Front wheel arch liner screw	
8	Front wheel arch liner screw	
9	Front wheel arch liner	Vehicle trim : Removal - Refitting
10	Front wheel arch liner screw	
11	Front wheel arch liner screw	
12	Rear wheel arch liner	Vehicle trim : Removal - Refitting
13	Rear wheel arch liner screw	
14	Rear wheel arch liner screw	

EXTERIOR FRONT SIDE OPENING ELEMENT ASSEMBLY: EXPLODED VIEW

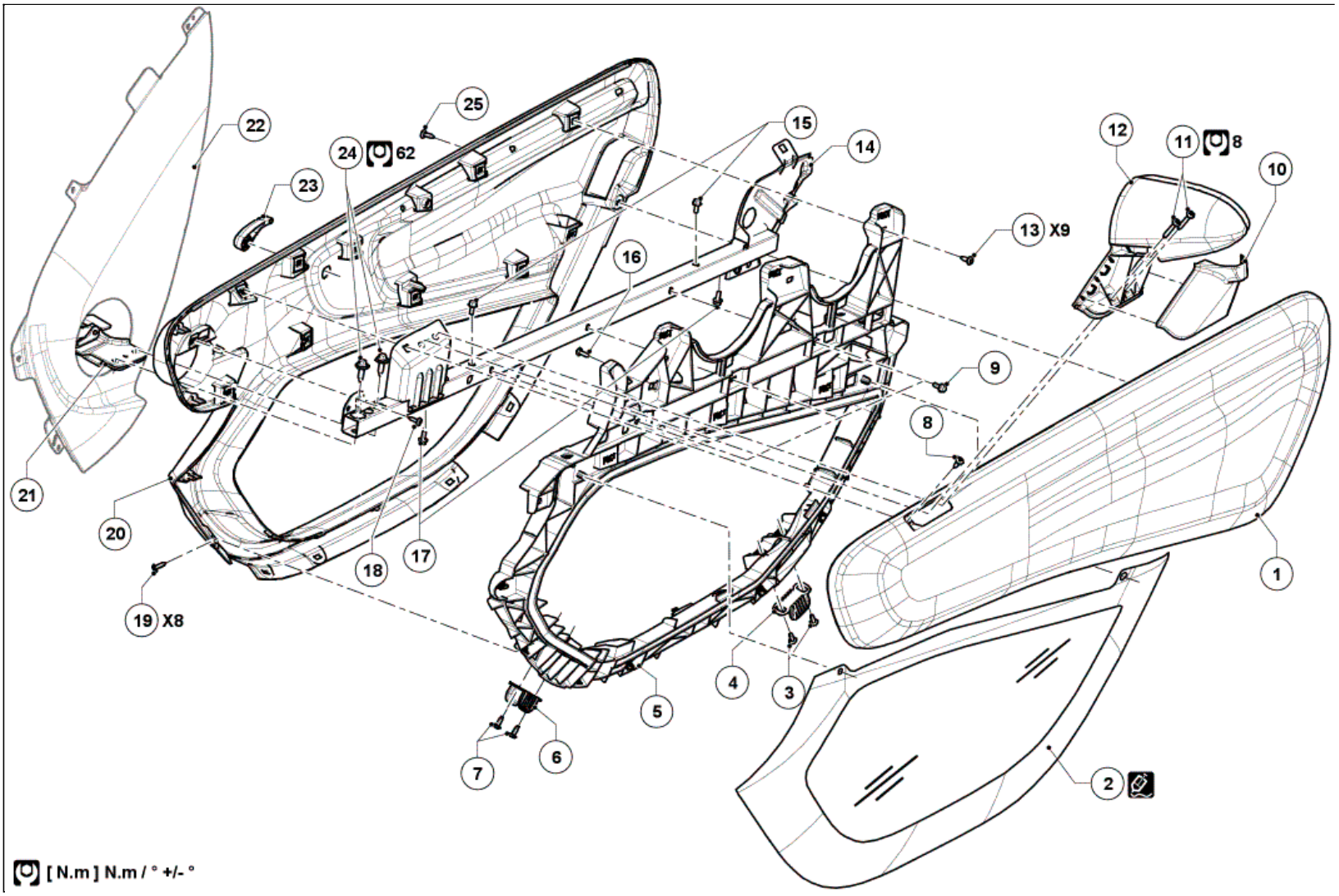

Illustration key: Description .

For fastenings with no specified tightening torque values, refer to the Table of Standard TorquesTightening torques: General information .

Marks	Designations	Informations
1	Front side door exterior panel	
2	Front side door fixed window	(see **Fixed window of front side opening element: Removal - Refitting**)
3	Front side door mobile centering bolts	
4	Front side door mobile centering	
5	Front side door frame	
6	Front side door mobile centering	
7	Front side door mobile centering bolts	
8	Front side door exterior panel bolt	
9	"Tube - opening element lock support" side bolts	
10	Door mirror trim	
11	Door mirror bolts	
12	Door mirror	(see **Door mirror: Removal - Refitting**)
13	Front side door panel trim bolts	
14	"Tube - opening element lock support"	
15	"Tube - opening element lock support" upper bolts	
16	Front side door frame bolt	
17	"Tube - opening element lock support" lower bolts	
18	Front side door panel trim bolt	
19	Front side door panel trim bolts	
20	Front side door panel trim	
21	Front side door hinge	(see **Front side opening element: Removal - Refitting**)
22	Windscreen side window	(see **Exterior body side trim assembly: Exploded view**)
23	Front side door interior opening handle	(see **Front opening element opening control: Removal - Refitting**)
24	Front side door bolts on hinge	
25	Front side door panel trim bolt	

FIXED GLASS ROOF: REMOVAL - REFITTING

Note, one or more warnings are present in this procedure

WARNING

To avoid all risk of damage to the systems, apply the safety and cleanliness instructions and operation recommendations before carrying out any repair:

Vehicle: Precautions for the repair .

REMOVAL

1. REMOVAL PREPARATION OPERATION

Remove the front bumper upper strip Exterior body front trim assembly: Exploded view .

Remove Exterior body side trim assembly: Exploded view :

- the A-pillar trims,
- the B-pillar trims,
- the roof front section trims.

Remove the roof rear section Exterior body rear trim assembly: Exploded view .

Remove the rear headlining Interior body side trim assembly: Exploded view .

Remove Roof trim assembly: Exploded view :

- the roof rear cross member trim,
- the roof front cross member trim.

Remove:

- the fixed glass roof seal,
- the seal between the fixed glass roof and the windscreen.

Protect:

- the vehicle interior,
- the edge of the roof with masking tape.

2. REMOVAL OPERATION

Cut the cement bead Window bonding tool: Use and Window detachment: Description .

REFITTING

1. REFITTING PREPARATION OPERATION

For preparation and bonding Products for preparing and bonding windows: Description .

2. REFITTING OPERATION

BONDING AREA

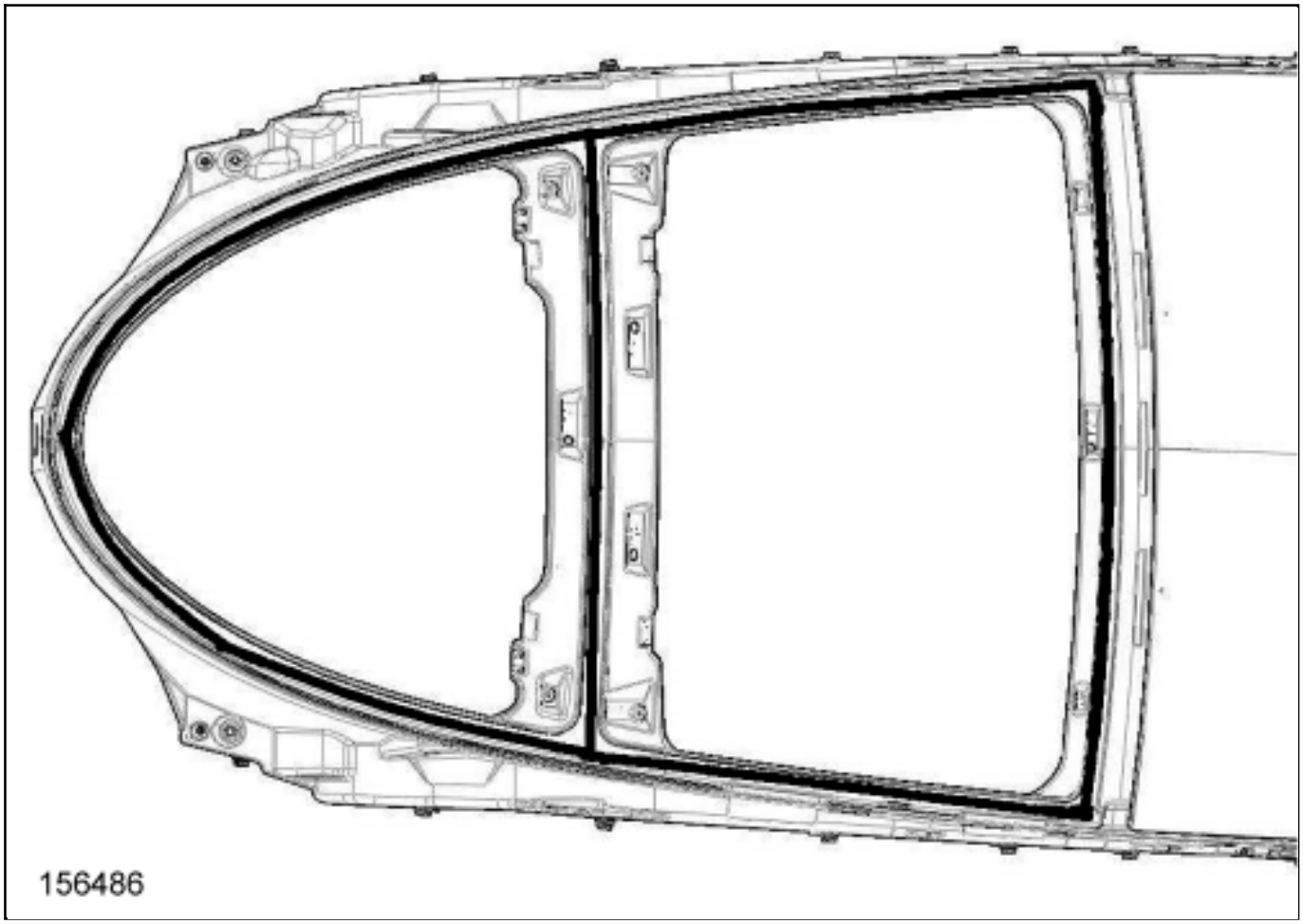

Note:

Apply the cement bead on the vehicle.

- Bond the fixed glass roof[Window bonding: Description] .

Note:

This operation requires two operators.

- Place the rear notch of the prepared fixed glass roof against the rib of the roof arch panel.

- Position the prepared fixed glass roof on the front section of the roof arch panel using the lateral

ribs.

❑

Apply pressure to the periphery and the roof rear cross member to ensure the crushing of the cement bead.

3. FINAL OPERATION

❑

Proceed in the reverse order to removal.

Repair-50x04x21x04-01x37-1-6-1.xml

XSL version : 3.02 du 22/07/11

FIXED WINDOW OF FRONT SIDE OPENING ELEMENT: REMOVAL - REFITTING

Location and specification (tightening torques, parts always to be replaced, etc.)Exterior front side opening element assembly: Exploded view .

REMOVAL

1. REMOVAL PREPARATION OPERATION

- Open the front side door.

- Remove Exterior front side opening element assembly: Exploded view :
  - the front door exterior panel,
  - the door mirror trim,
  - the door mirror,
  - the front door hinge bolts,
  - the front side door,
  - the front door interior opening handle,
  - the front door panel trim.

- Protect the the front side door fixed window with masking tape.

2. REMOVAL OPERATION

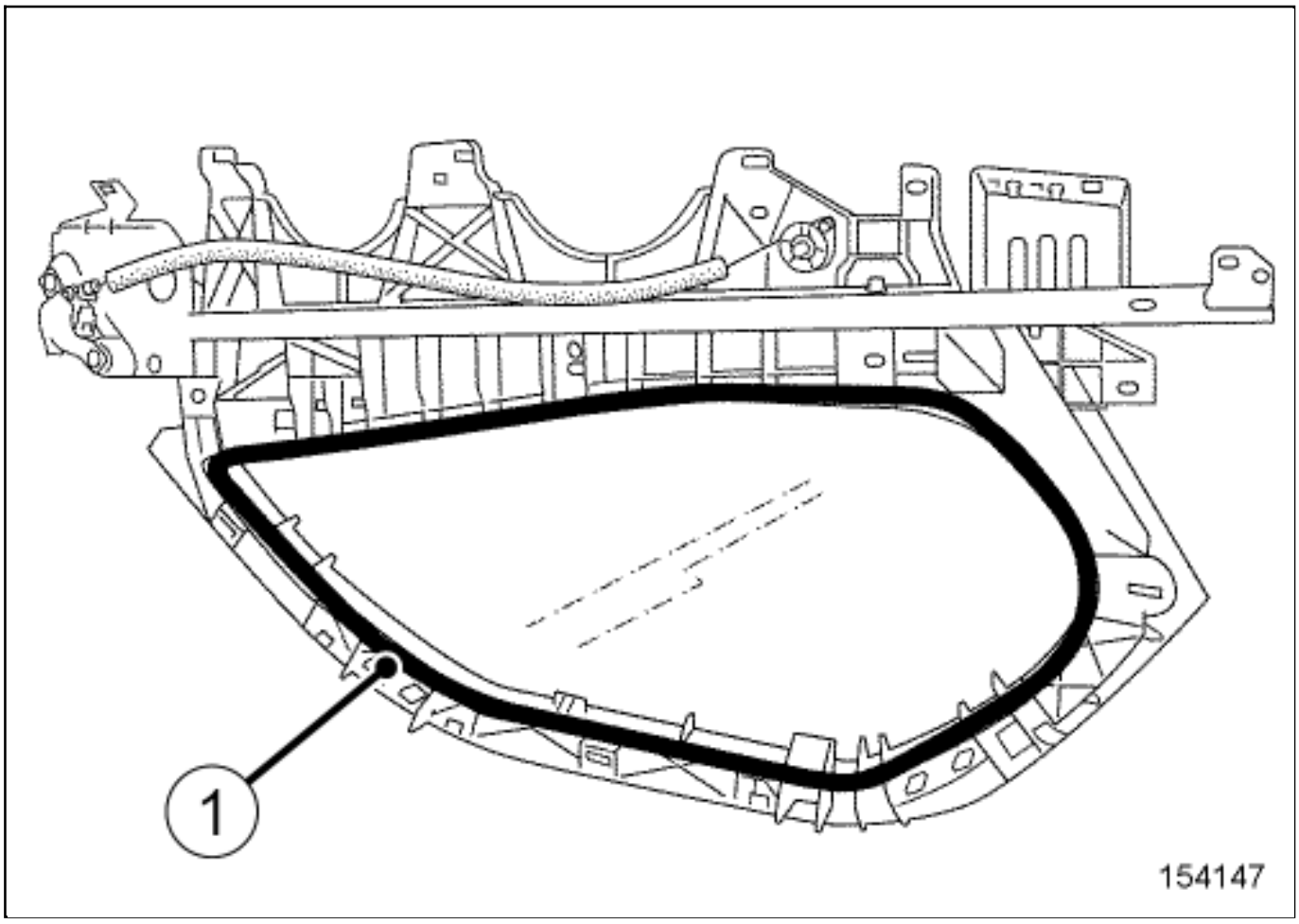

- Cut the cement bead(1) Window bonding tool: Use and Window detachment: Description .

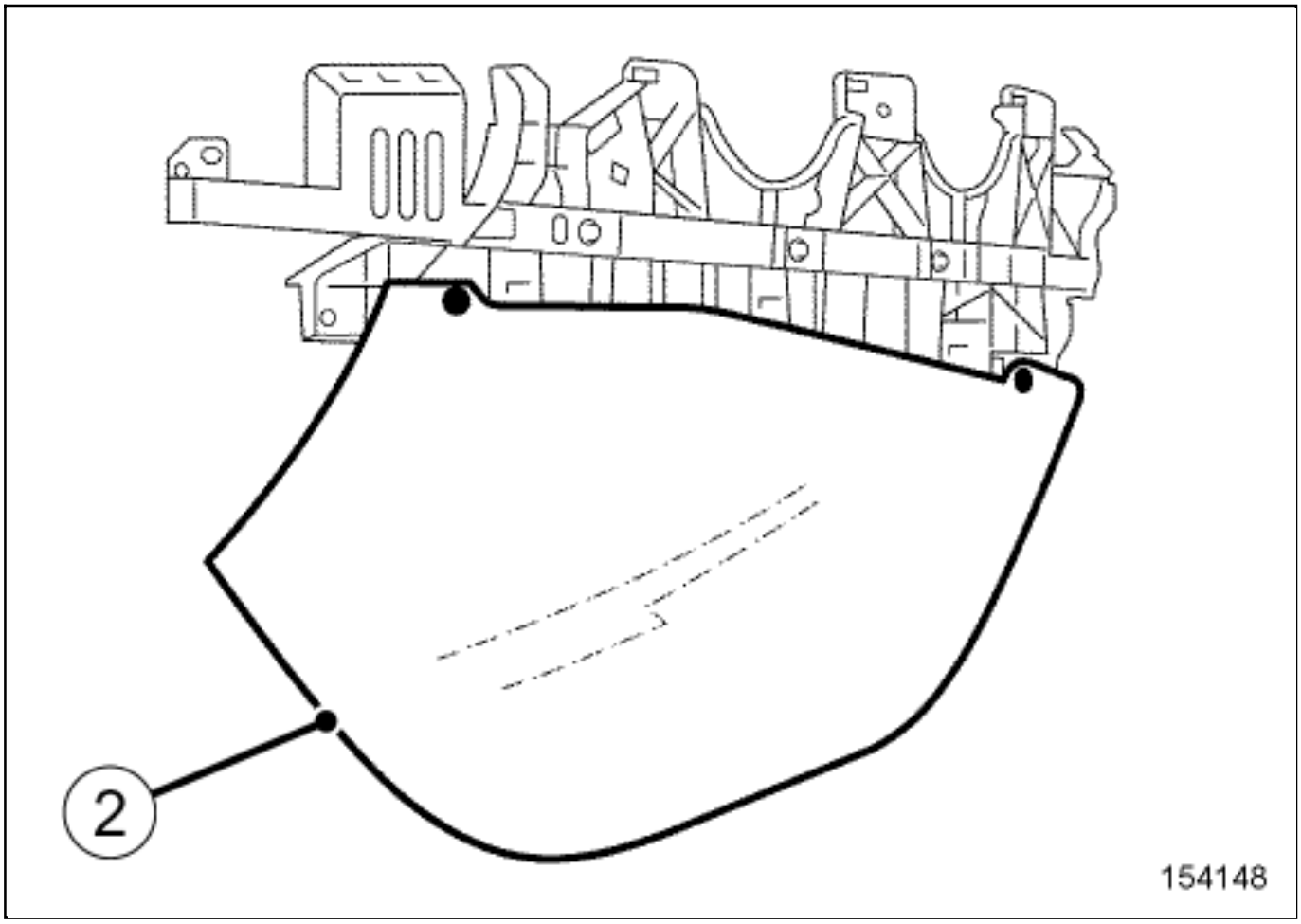

- Remove the front side door fixed window(2) .

REFITTING

1. REFITTING PREPARATION OPERATION

- For preparation and bondingProducts for preparing and bonding windows: Description .

2. REFITTING OPERATION

- Bond the front side door fixed windowWindow bonding: Description .

3. FINAL OPERATION

- Remove the masking tape.

- Proceed in the reverse order to removal.

Repair-50x04x06x01-01x37-1-1-1.xml

XSL version : 3.02 du 22/07/11

FLOOR TRIM ASSEMBLY: EXPLODED VIEW

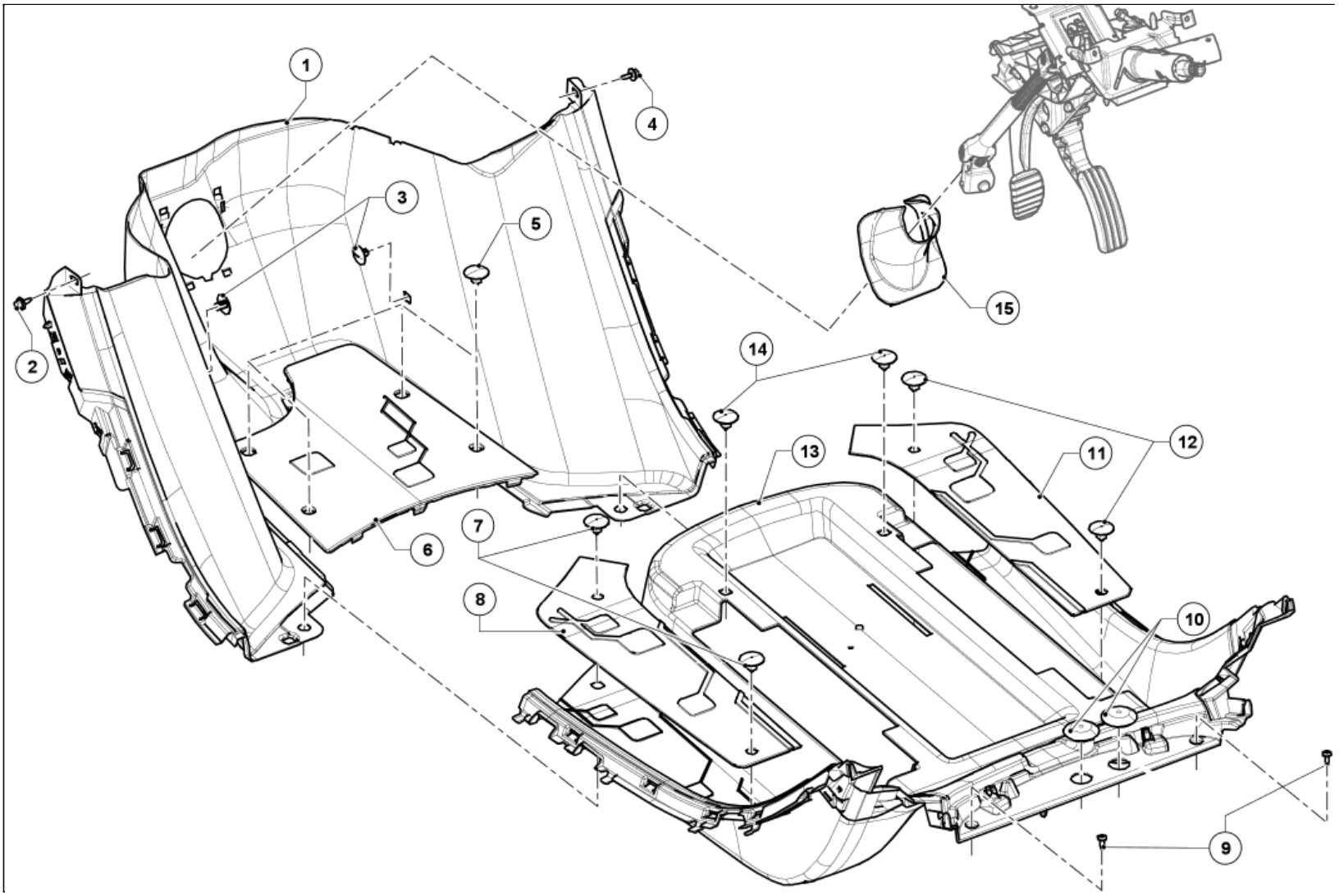

Illustration key: Description .

For fastenings with no specified tightening torque values, refer to the Table of Standard TorquesTightening torques: General information .

Marks	Designations	Informations
1	Bulkhead	Vehicle trim : Removal - Refitting
2	Left-hand bulkhead screw	
3	Bulkhead clips	
4	Right-hand bulkhead screw	
5	Front floor clips	
6	Front floor	Vehicle trim : Removal - Refitting
7	Left-hand compartment centre floor carpet clips	
8	Left-hand compartment centre floor carpet	
9	Centre floor rear screws	
10	Centre floor stoppers	
11	Right-hand compartment centre floor carpet	
12	Right-hand compartment centre floor carpet clips	
13	Centre floor	Vehicle trim : Removal - Refitting
14	Centre floor front clips	
15	Steering column trim	

FLOOR TRIM ASSEMBLY: EXPLODED VIEW

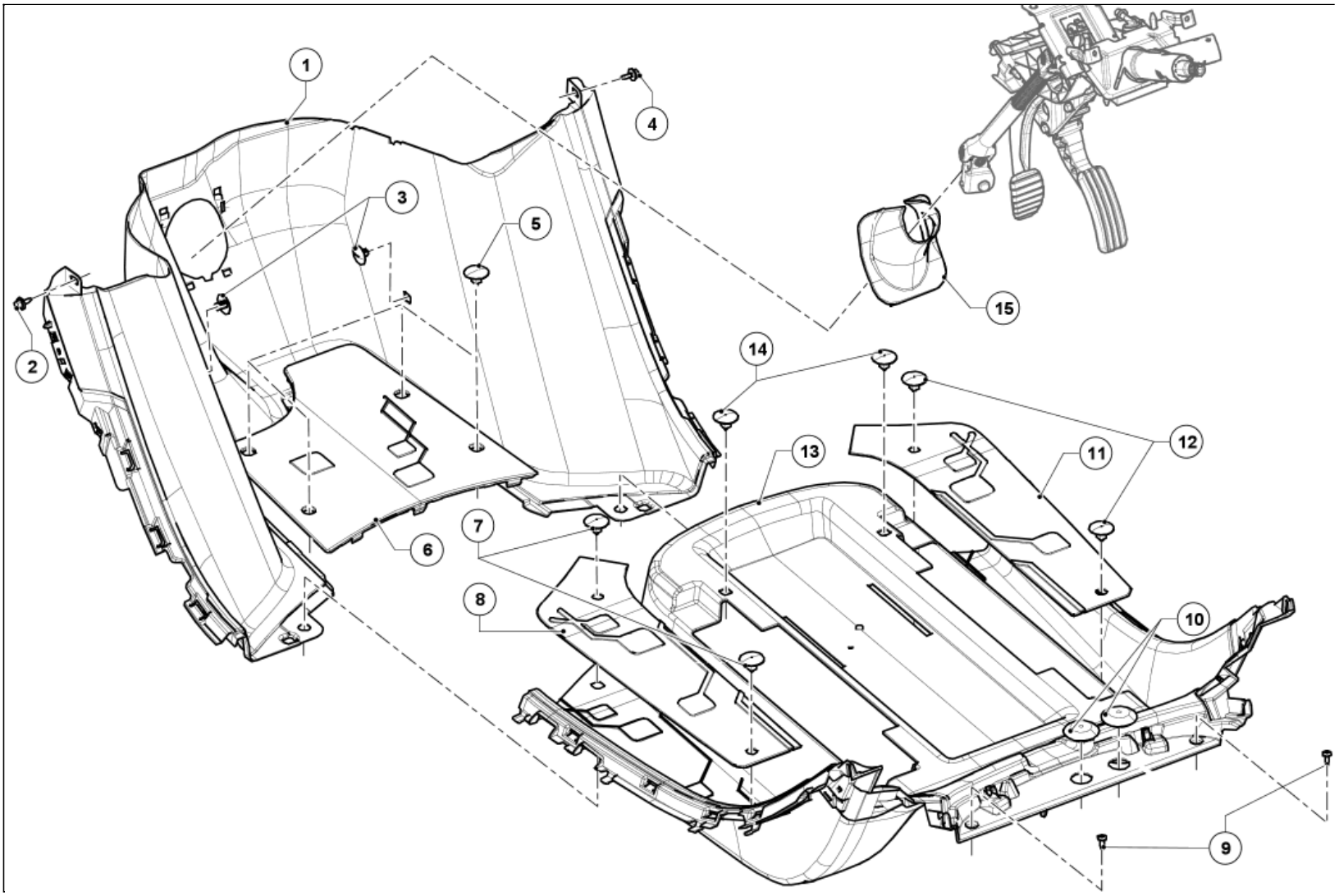

Illustration key: Description .

For fastenings with no specified tightening torque values, refer to the Table of Standard TorquesTightening torques: General information .

Marks	Designations	Informations
1	Bulkhead	Vehicle trim : Removal - Refitting
2	Left-hand bulkhead screw	
3	Bulkhead clips	
4	Right-hand bulkhead screw	
5	Front floor clips	
6	Front floor	Vehicle trim : Removal - Refitting
7	Left-hand compartment centre floor carpet clips	
8	Left-hand compartment centre floor carpet	
9	Centre floor rear screws	
10	Centre floor stoppers	
11	Right-hand compartment centre floor carpet	
12	Right-hand compartment centre floor carpet clips	
13	Centre floor	Vehicle trim : Removal - Refitting
14	Centre floor front clips	
15	Steering column trim	

FOOTPANEL:REPLACEMENT

Note, one or more warnings are present in this procedure

WARNING

DANGER: HIGH VOLTAGE VEHICLE.

Risks of serious burns or electric shock that may prove fatal.

Before carrying out any work on the vehicle, it is essential that you adhere to the instructions regarding vehicle voltage cut-off. This work must be carried out by an employee who is qualified and authorized to work on a high-voltage onboard network Vehicle: Precautions for the repair .

1. COMPOSITION OF THE SPARE PART

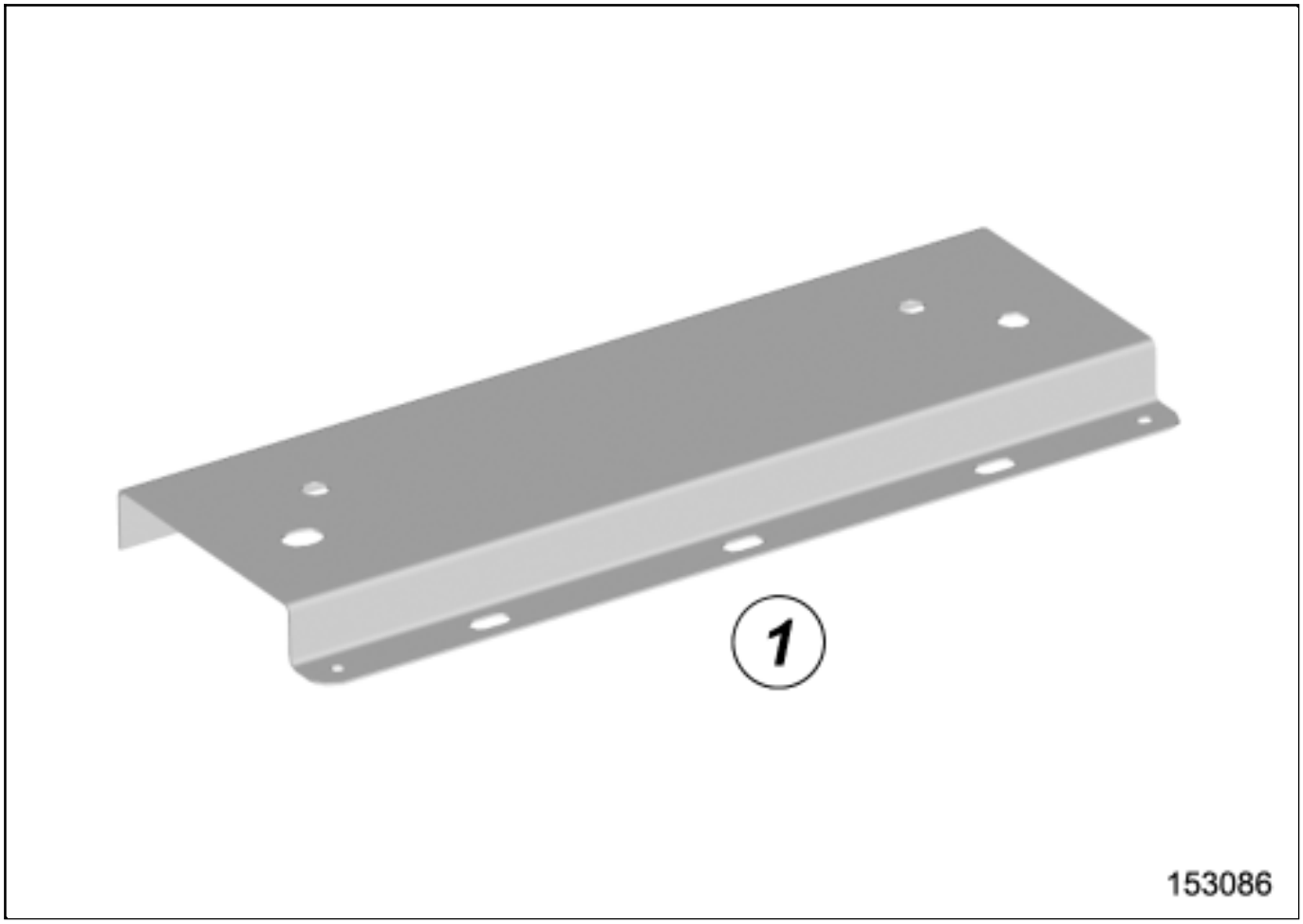

No.	Description	Type	Thickness (mm)
(1)	Foot panel	XES	1.2

2. IN THE EVENT OF REPLACEMENT

There is only one way of replacing this part:

- complete replacement.

CAUTION

To avoid damaging the vehicles electric and electronic components, the earths of any wiring harness near the weld area must be disconnected.

Position the earth of the welding machine as close as possible to the weld area(see **Bolted connection for earth: Fitting**) (MR 400, 40H, Bolted connections).

Locate the earths located near to the weld areaEarths on body: List and location of components .

1- COMPLETE REPLACEMENT

1)PART IN POSITION

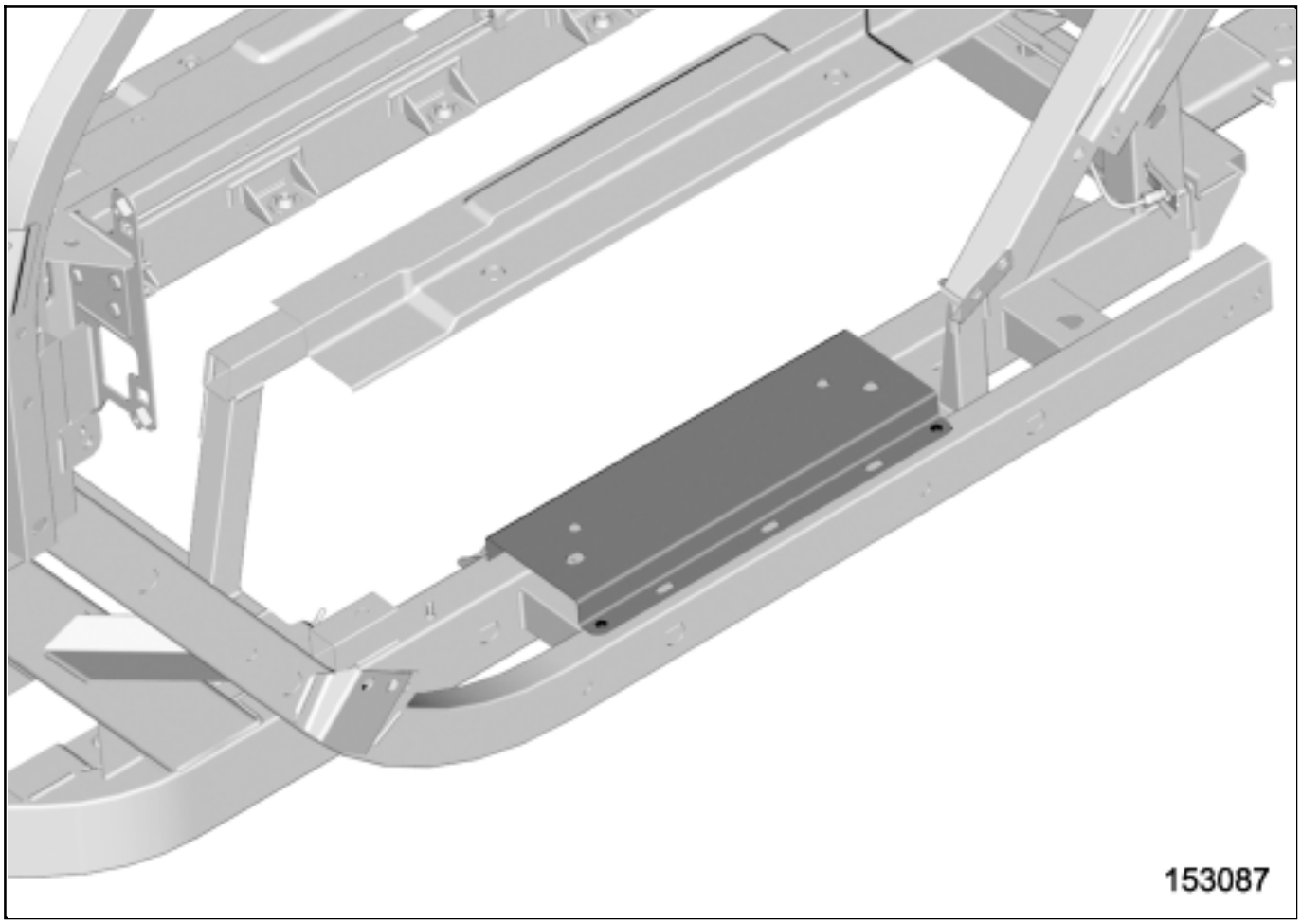

2)SPECIAL NOTES ON MATING

CAUTION

If the mating faces of the parts to be welded are not accessible, use a GMAW plug weld in place of the original electrical resistance weld**Connections by arc welding under shielding gas: Description** (MR 400, 40C, Gas metal arc welded connections (GMAW)).

FRONT AXLE ASSEMBLY: EXPLODED VIEW

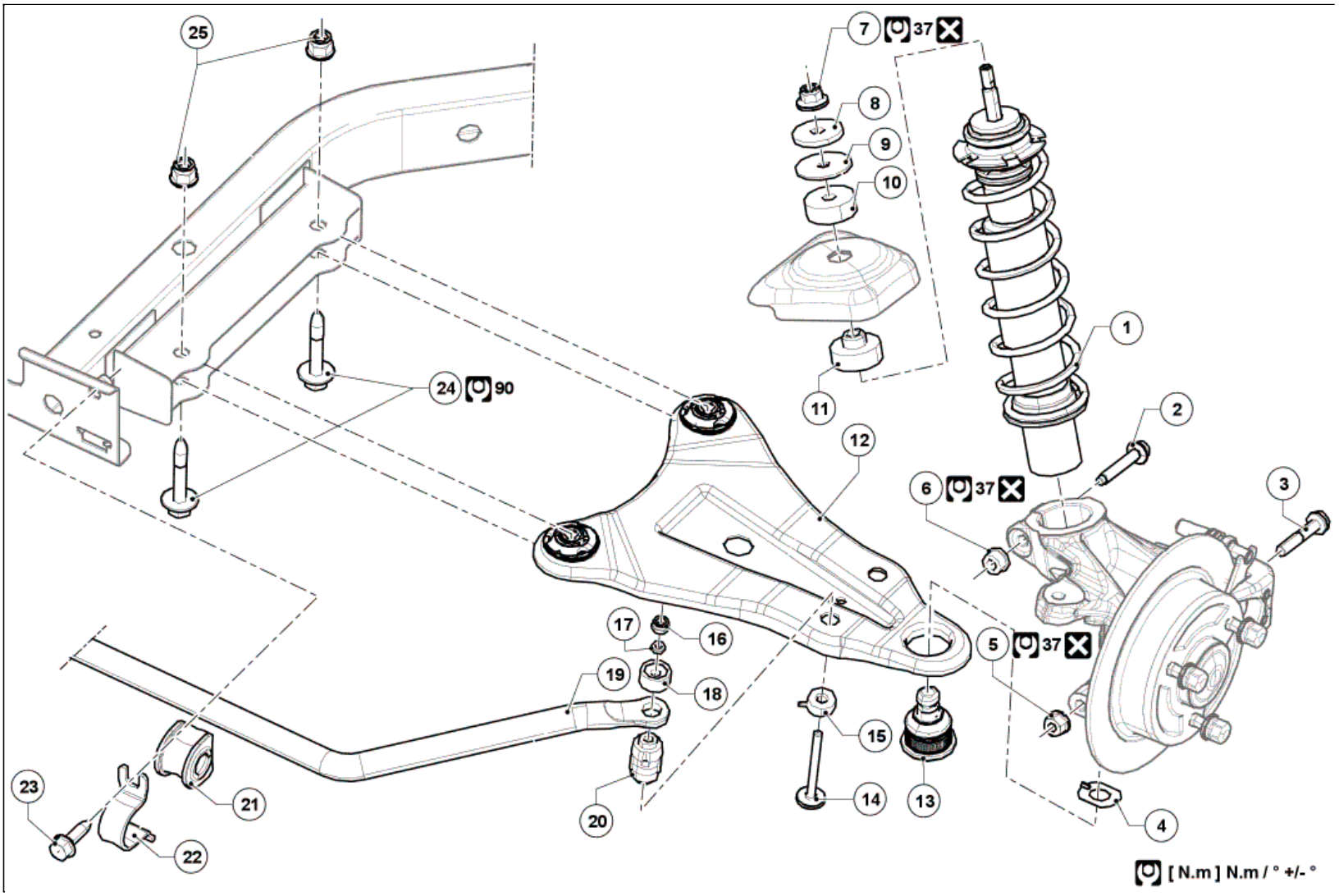

Illustration key: Description .

For fastenings with no specified tightening torque values, refer to the Table of Standard TorquesTightening torques: General information .

Marks	Designations	Informations
1	Filter unit	
2	Shock absorber base bolt	
3	Lower arm ball joint bolt	
4	Lower arm ball joint protector	
5	Lower arm ball joint nut	
6	Shock absorber base nut	
7	Shock absorber nut on filter unit	
8	Shock absorber washer on filter unit	
9	Upper damper component washer	
10	Spring upper damper	
11	Spring lower damper	
12	Lower arm	Ball-joint uncoupling tool : Use
13	Lower arm ball joint	
14	Anti-roll bar tie-rod bolt	
15	Anti-roll bar tie-rod	
16	Anti-roll bar tie-rod nut	
17	Anti-roll bar tie-rod washer	
18	Anti-roll bar tie-rod	
19	Anti-roll bar	
20	Anti-roll bar tie-rod	
21	Anti-roll bar bearing	
22	Anti-roll bar bracket	
23	Anti-roll bar bearing bolt	
24	Lower arm bolts	
25	Lower arm nuts	

FRONTAXLESYSTEM:ADJUSTMENT

Equipment required
flywheel immobiliser

1. PREPARATION FOR ADJUSTMENT

- Check the geometry(see 30A, General information, Axle assemblies: Check) .

2. ADJUSTMENT OPERATION

1- WHEEL ALIGNMENT

- Set the wheels straight ahead.
- Lock the steering wheel using a flywheel immobiliser.

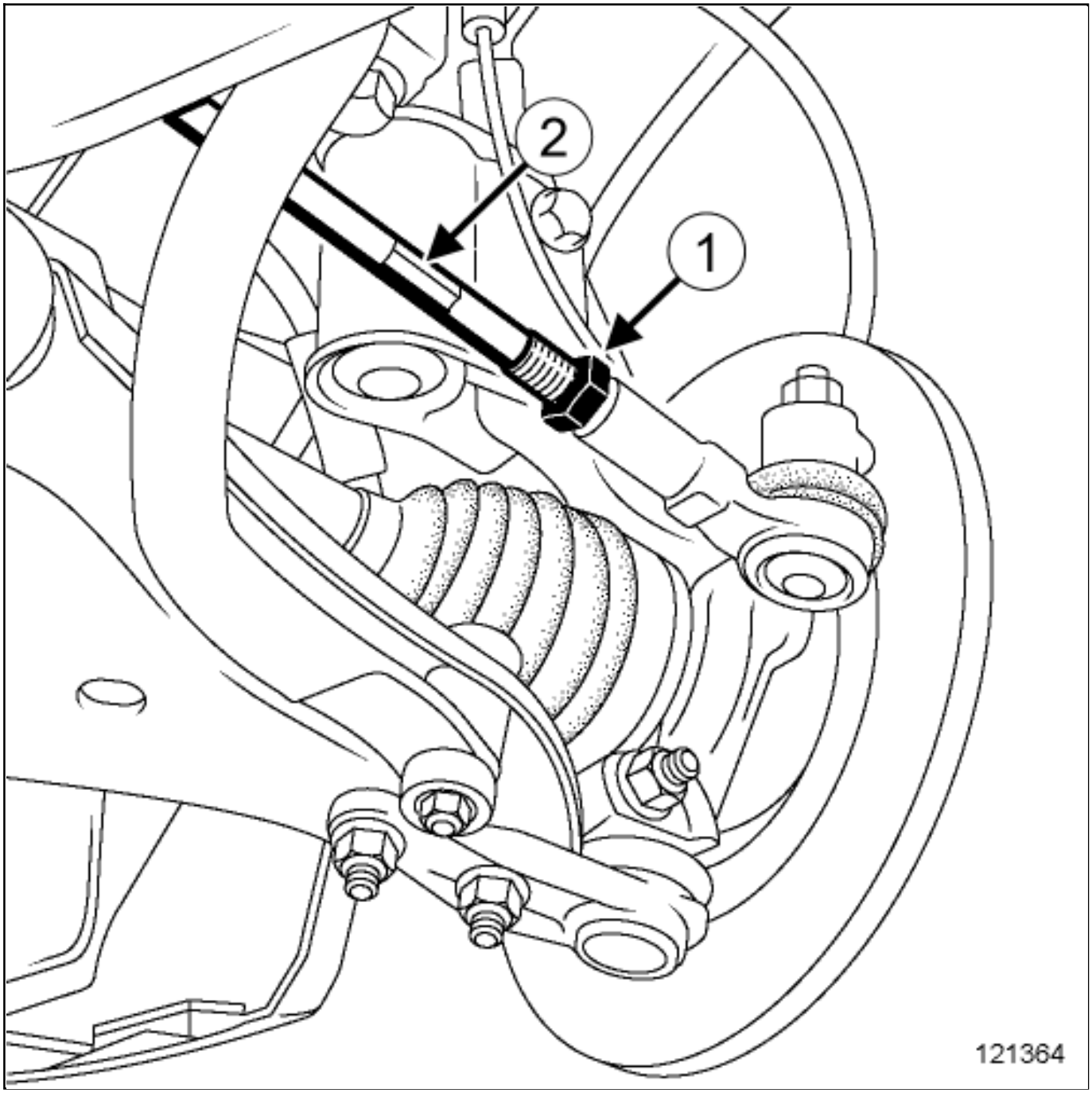

- Loosen the wheel alignment adjustment lock nut(1) .

- Turn the track rod sleeve(2) to the required value.

- After adjustment, torque tighten the wheel alignment adjustment lock nutsSteering assembly: Exploded view .

2- CASTOR ANGLE

- Not adjustable.

3- CAMBER

- Not adjustable.

4- PIVOT

- Not adjustable.

FRONT AXLE

Note, one or more warnings are present in this procedure

1. WHEEL ALIGNMENT: MEANING OF SYMBOLS

CAUTION

- Symbols used by RENAULT:
  - toe-out: -
  - toe-in: +

TOE-OUT: MINUS SIGN

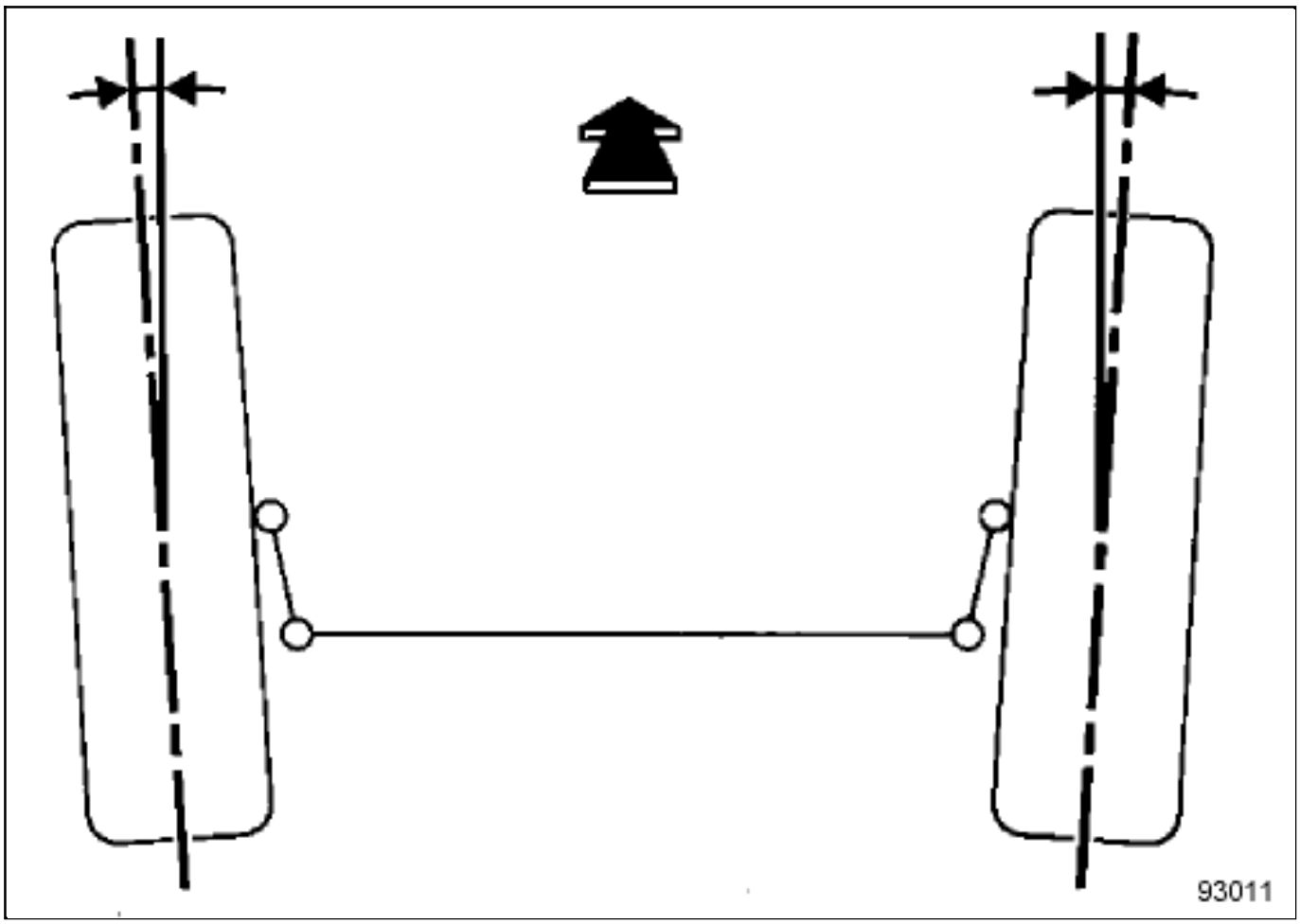

TOE-IN: PLUS SIGN

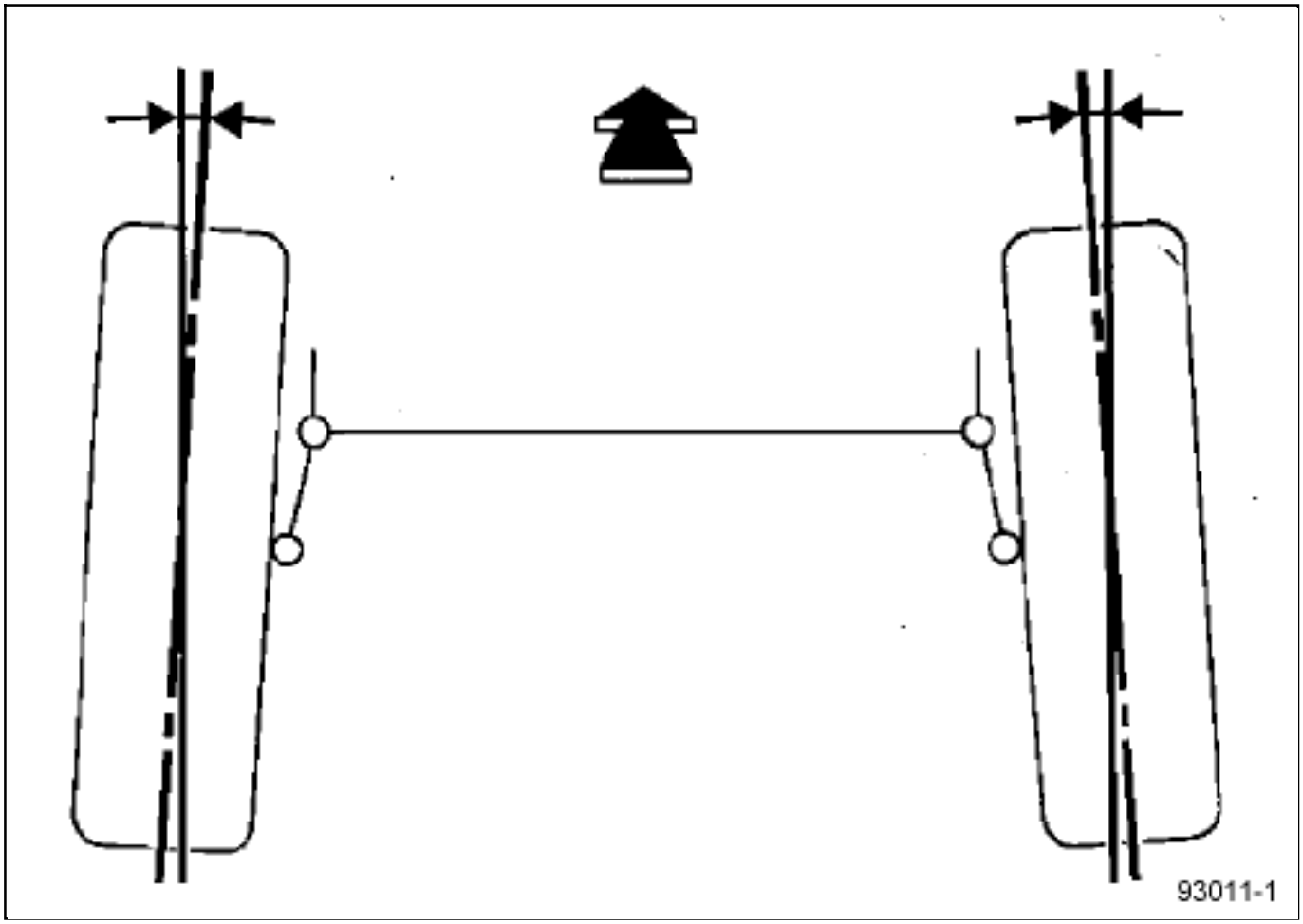

2. WHEEL ALIGNMENT

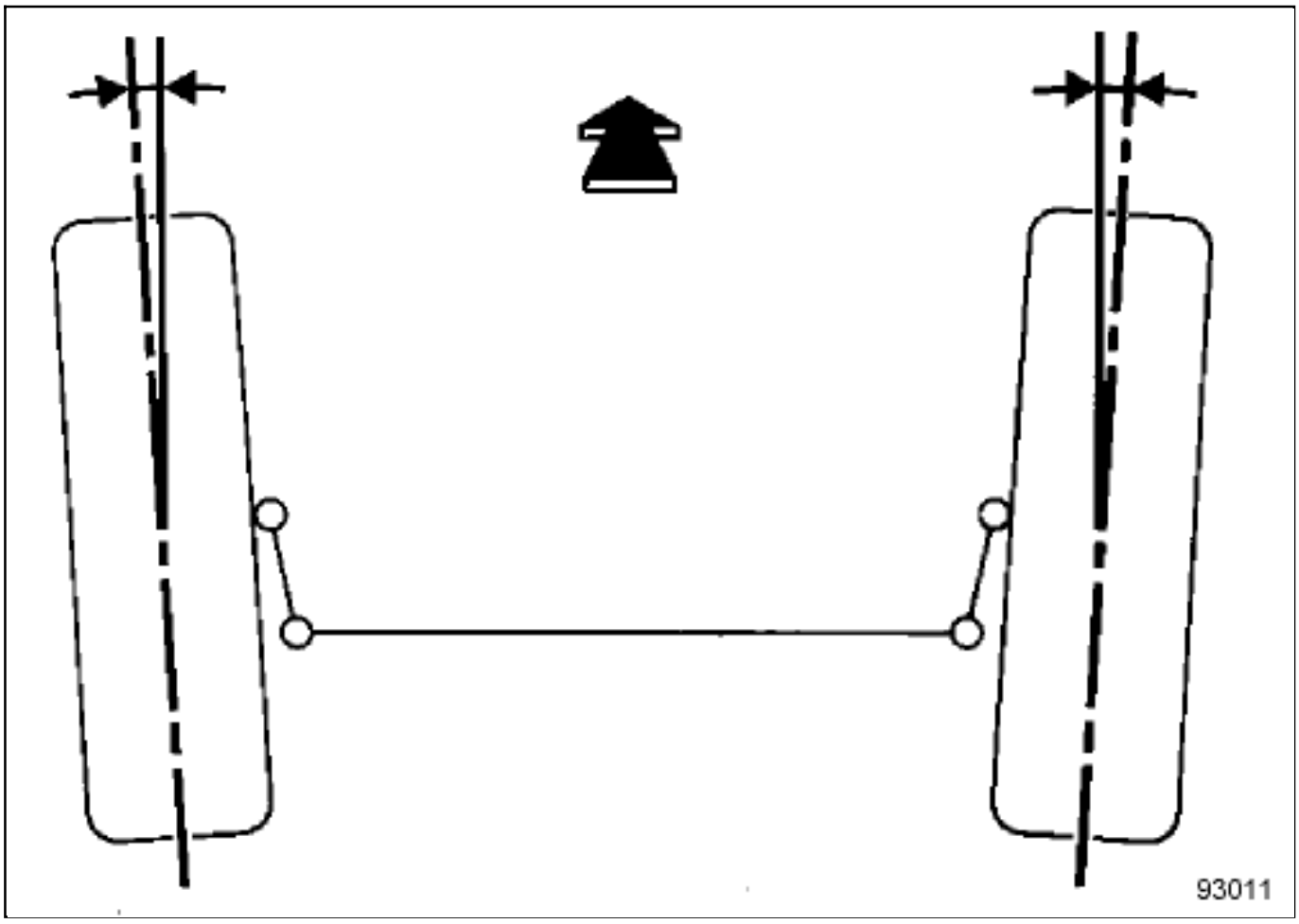

Value (for two wheels)	Tolerance	Position of vehicle
0˚	+1˚	Vehicle in running order
	-1˚	

3. CASTOR ANGLE

Not adjustable.

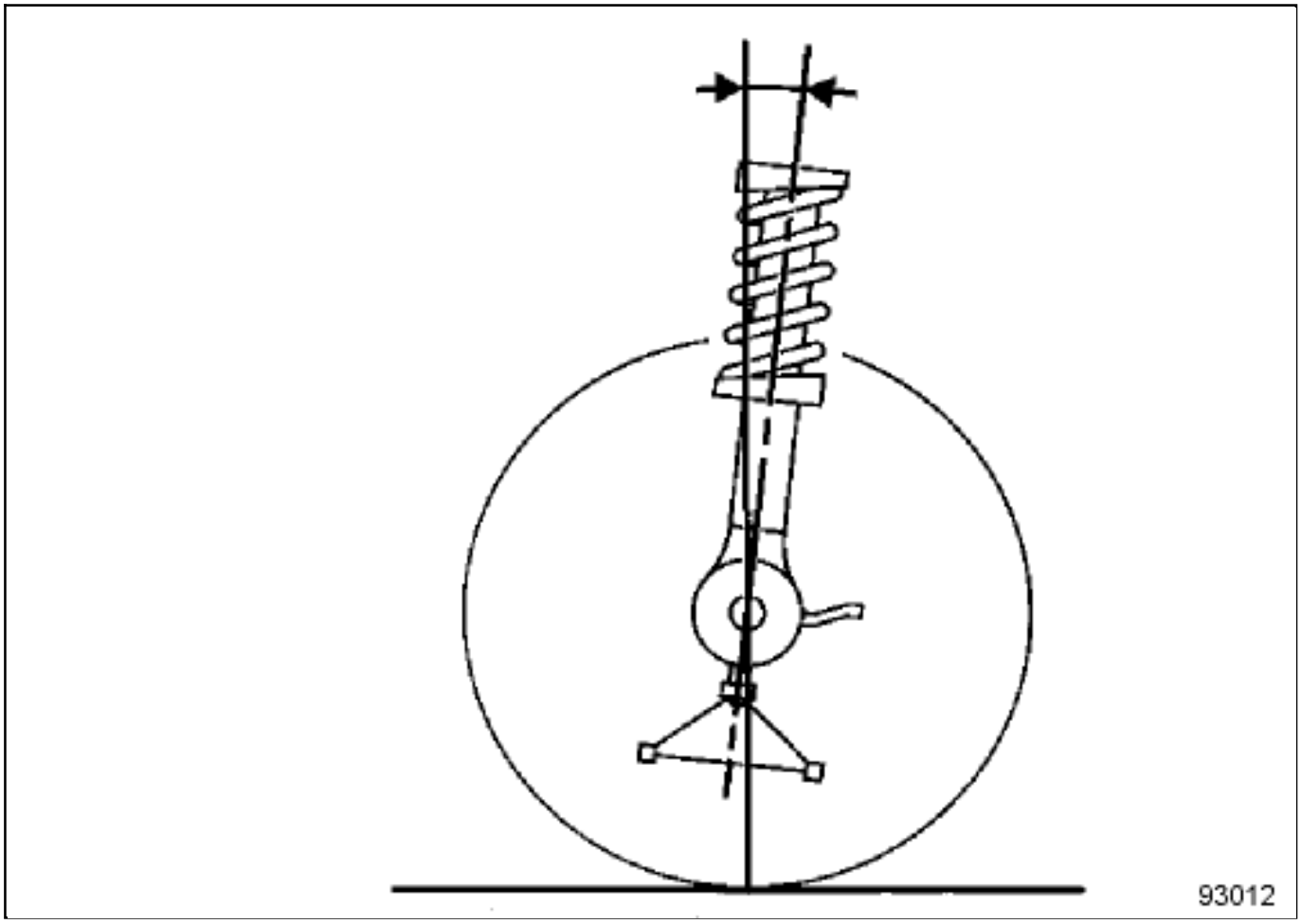

Value (for two wheels)	Tolerance	Position of vehicle
8.206˚	+1˚	Vehicle in running order
	-1˚	

4. CAMBER

Not adjustable.

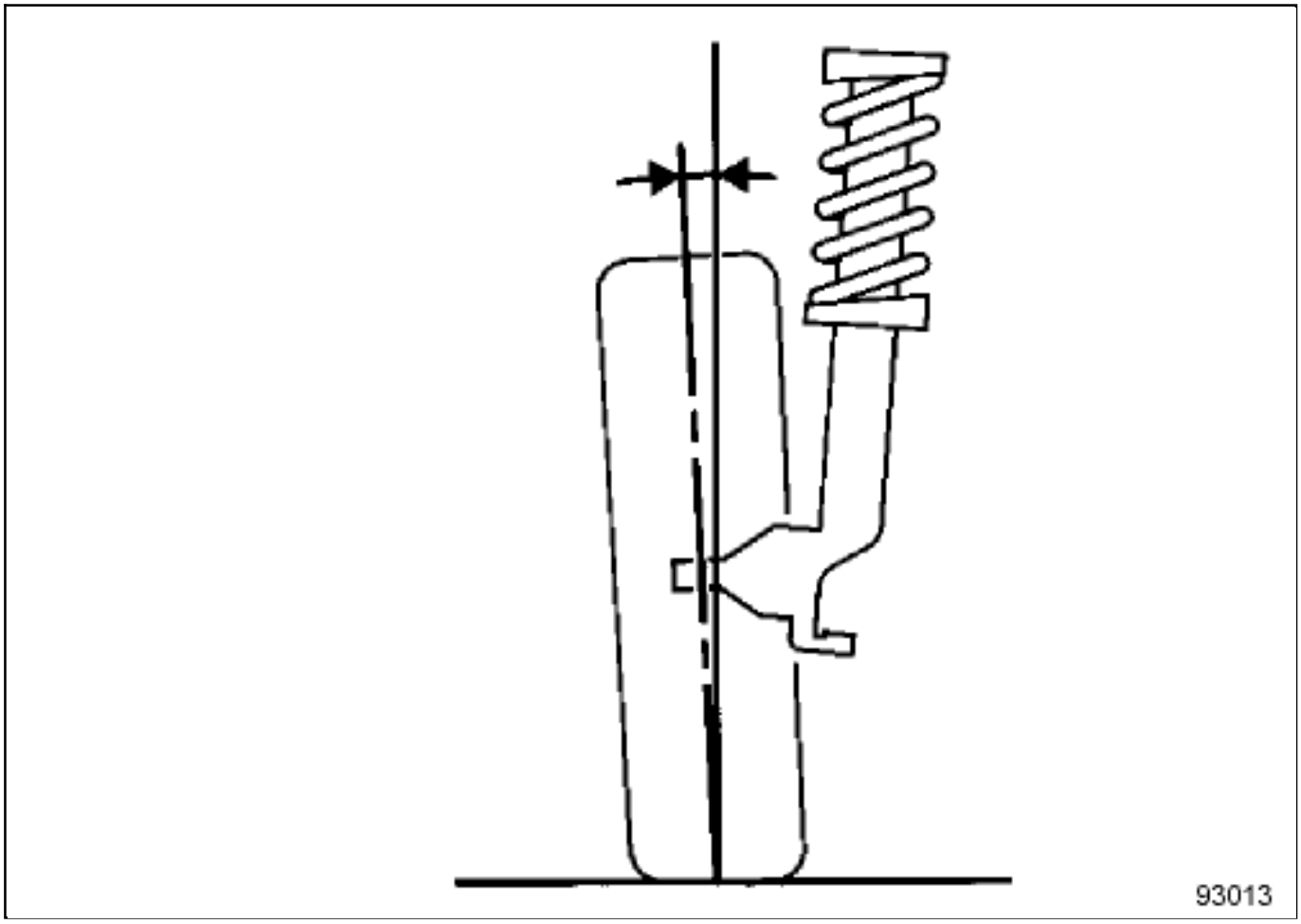

Value (for two wheels)	Tolerance	Position of vehicle
-0.324˚	+1˚	Vehicle in running order
	-1˚	

5. PIVOT

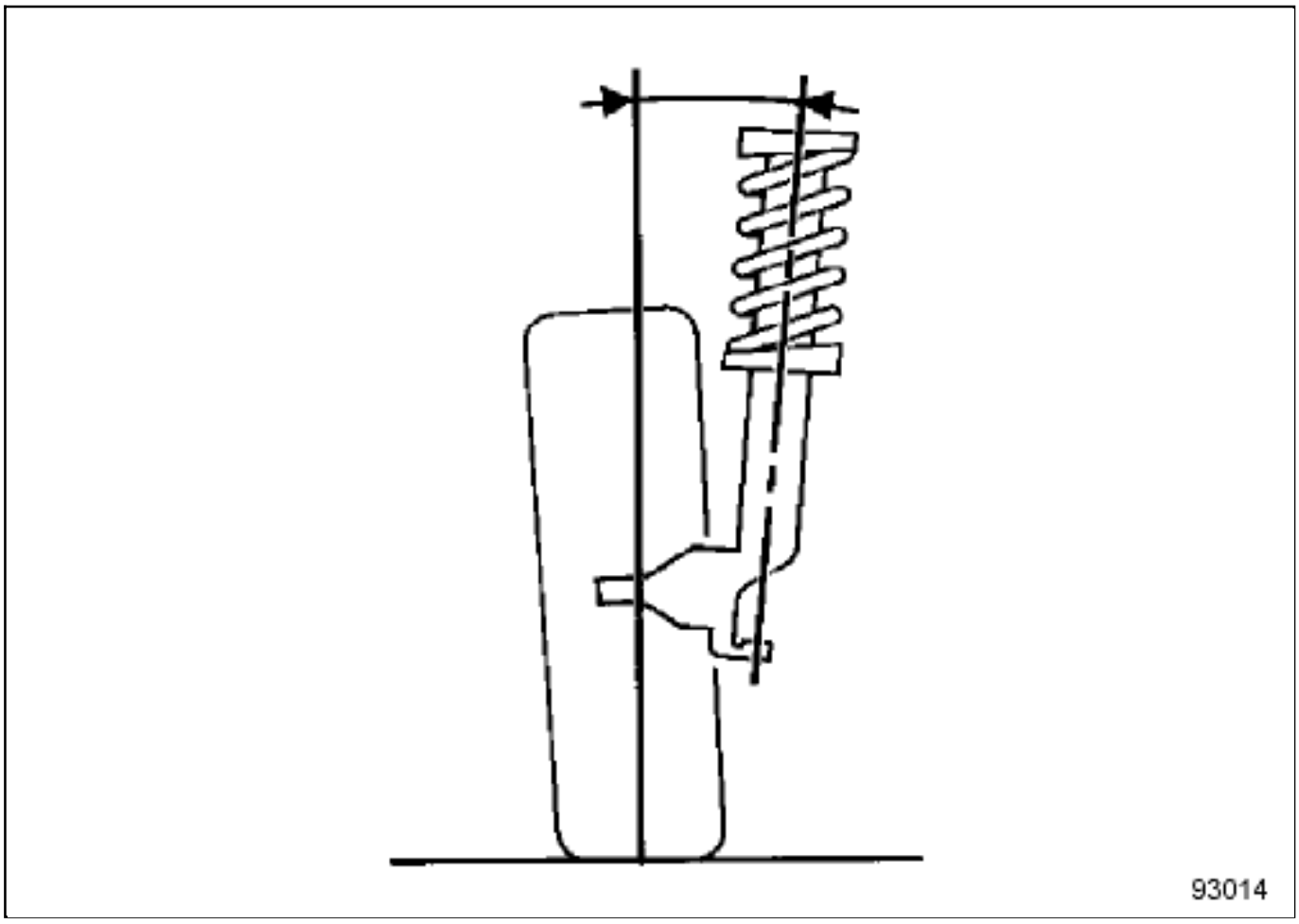

Value (for two wheels)	Tolerance	Position of vehicle
		Vehicle in running order

Repair-13x02x01-02x13-6-36-1.xml

XSL version : 3.02 du 22/07/11

FRONT BRAKE CALLIPER ASSEMBLY: EXPLODED VIEW

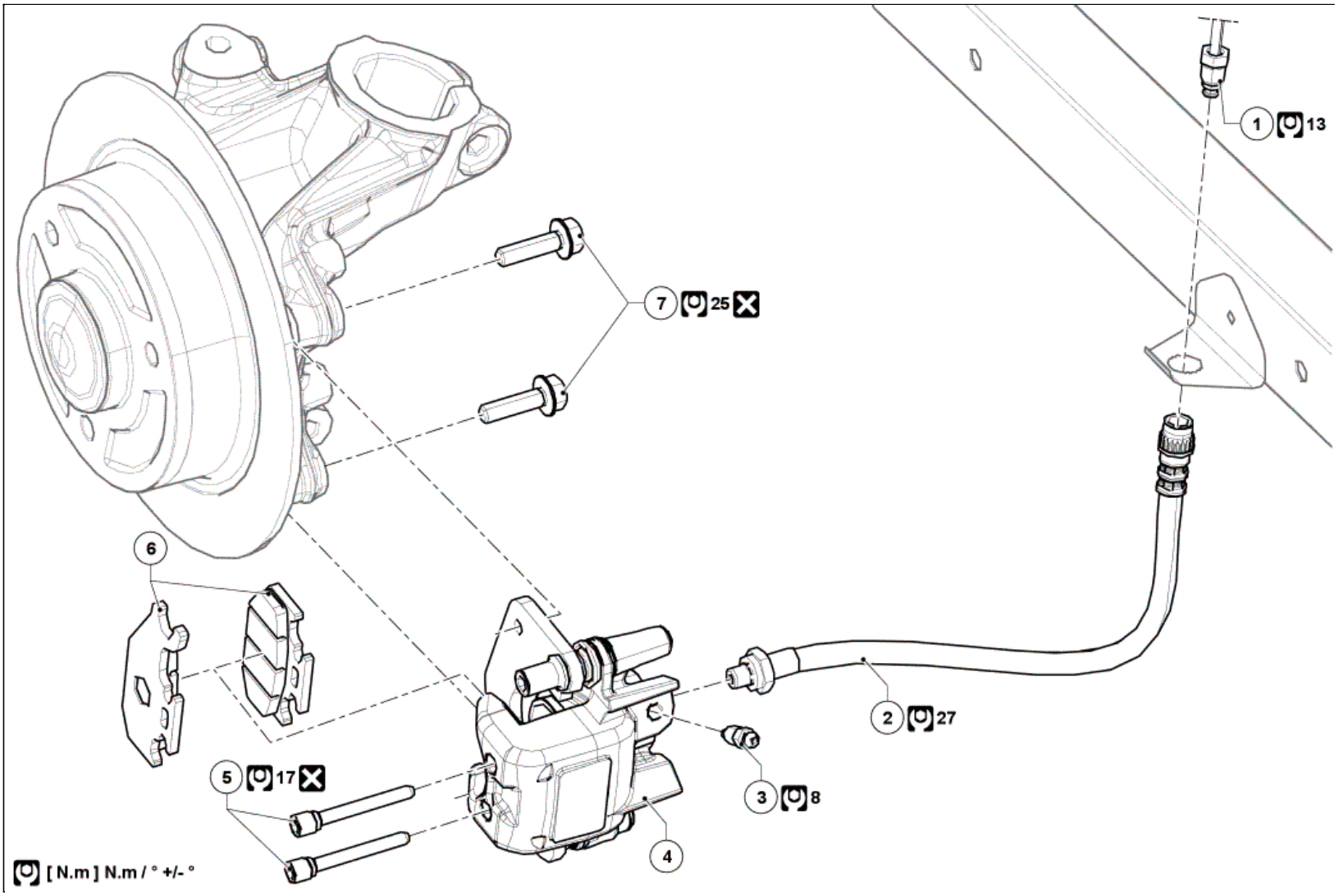

Illustration key: Description .

For fastenings with no specified tightening torque values, refer to the Table of Standard TorquesTightening torques: General information .

Marks	Designations	Informations
1	Front right-hand rigid brake pipe	Rigid brake pipe: Removal - Refitting
2	Brake hose	
3	Front brake calliper bleed screw	
4	Front brake calliper	
5	Front brake pads guide pins	
6	Brake pads	
7	Front brake calliper mounting bolts	

FRONT BRAKE DISC: REMOVAL - REFITTING

Note, one or more warnings are present in this procedure

Equipment required
parts washer

WARNING

- To avoid all risk of damage to the systems, apply the safety and cleanliness instructions and operation recommendations before carrying out any repair:
  - Brake circuit: Precautions for the repair ,
  - Vehicle: Precautions for the repair .

Localisation and specification tightening torques parts always to be replaced, etc.)Front hub carrier assembly: Exploded view .

REMOVAL

1. REMOVAL PREPARATION OPERATION

- Position the vehicle on a two post liftVehicle: Towing and lifting .

- Remove:
  - the front wheelsWheel: Removal - Refitting ,
  - the front brake padsFront brake calliper assembly: Exploded view ,
  - the front brake calliper mounting boltsFront brake calliper assembly: Exploded view .

- Hang the "brake calliper mounting - brake calliper" assembly on the suspension spring.

2. REMOVAL OPERATION

- Remove Front hub carrier assembly: Exploded view :
  - the front brake disc plug,

- the front stub axle nut,
- the front brake disc.

REFITTING

1. REFITTING PREPARATION OPERATION

- Clean the brake disc using a parts washer.
- Dry the surface of the disc.
- Clean the mating faces of the disc on the hub using a wire brush and brake cleanerVehicle: Parts and consumables for the repair .
- Check for the presence of the front stub axle carrier bearing washerFront hub carrier assembly: Exploded view .

2. REFITTING OPERATION

- Refit Front hub carrier assembly: Exploded view :
  - the front brake disc,
  - the front stub axle nut,
  - the front brake disc plug.

3. FINAL OPERATION

- Proceed in the reverse order to removal.

WARNING

To avoid any accident, bring the pistons, brake pads and brake discs into contact by depressing the brake pad several times.

- Advise the customer to run-in the brake pads (no harsh braking).

Repair-13x03x03x03-01x37-1-32-1.xml

XSL version : 3.02 du 22/07/11

FRONT BRAKE DISC: REMOVAL - REFITTING

Note, one or more warnings are present in this procedure

Equipment required
parts washer

WARNING

To avoid all risk of damage to the systems, apply the safety and cleanliness instructions and operation recommendations before carrying out any repair:

- Brake circuit: Precautions for the repair ,
- Vehicle: Precautions for the repair .

Localisation and specification tightening torques parts always to be replaced, etc.)(see 31A, Front axle components, Front hub carrier assembly: Exploded view) .

REMOVAL

1. REMOVAL PREPARATION OPERATION

Position the vehicle on a two post lifVehicle: Towing and lifting .

Remove:

- the front wheelsWheel: Removal - Refitting ,
- the front brake pads(see 31A, Front axle components, Front brake calliper assembly: Exploded view) ,
- the front brake calliper mounting bolts(see 31A, Front axle components, Front brake calliper assembly:

Exploded view) .

- Hang the "brake calliper mounting - brake calliper" assembly on the suspension spring.

2. REMOVAL OPERATION

- Remove (see 31A, Front axle components, Front hub carrier assembly: Exploded view) :
  - the front brake disc plug,
  - the front stub axle nut,
  - the front brake disc.

REFITTING

1. REFITTING PREPARATION OPERATION

- Clean the brake disc using a parts washer.
- Dry the surface of the disc.
- Clean the mating faces of the disc on the hub using a wire brush and brake cleaner Vehicle: Parts and consumables for the repair .
- Check for the presence of the front stub axle carrier bearing washer (see 31A, Front axle components, Front hub carrier assembly: Exploded view) .

2. REFITTING OPERATION

- Refit (see 31A, Front axle components, Front hub carrier assembly: Exploded view) :

- the front brake disc,
- the front stub axle nut,
- the front brake disc plug.

3. FINAL OPERATION

Proceed in the reverse order to removal.

WARNING

To avoid any accident, bring the pistons, brake pads and brake discs into contact by depressing the brake pad several times.

Advise the customer to run-in the brake pads (no harsh braking).

Repair-13x03x03x03-01x37-1-32-1.xml

XSL version : 3.02 du 22/07/11

FRONT BRAKE PADS: REMOVAL - REFITTING

Note, one or more warnings are present in this procedure

Special tooling required	
Brake calliper piston return tool.	Fre. 1190-01

parts always to be replaced:
Front brake calliper mounting bolts

WARNING

- To avoid all risk of damage to the systems, apply the safety and cleanliness instructions and operation recommendations before carrying out any repair:
  - (see 31A, Front axle components, Front axle components: Precautions for the repair) ,
  - Vehicle: Precautions for the repair .

CAUTION

- In order not to damage the brake hose:
  - do not tension the hose,
  - do not twist the hose,
  - check that there is no contact with the surrounding components.

Location and specifications (tightening torques, parts always to be replaced, etc.)(see 31A, Front axle components, Front brake calliper assembly: Exploded view) .

REMOVAL

1. REMOVAL PREPARATION OPERATION

- Position the vehicle on a two-post lifVehicle: Towing and lifting .
- Set the wheels straight ahead.

Remove the front wheels(see 31A, Front axle components, Front hub carrier assembly: Exploded view) .

2. REMOVAL OPERATION

Remove (see 31A, Front axle components, Front brake calliper assembly: Exploded view) :

- the front brake pads guide pins,
- the font brake calliper bolts,
- the front brake calliper,
- the brake pads from the front brake calliper.

REFITTING

1. REFITTING PREPARATION OPERATION

Parts always to be replaced: front brake pads guide pins

parts always to be replaced: Front brake calliper mounting bolts

Measure the thickness of the brake pads and compare them with the minimum values Brake: Specifications .

CAUTION

Do not allow friction materials to come into contact with grease, oil or other lubricants and cleaning products which are mineral oil based.

Clean using a wire brush and brake cleanerVehicle: Parts and consumables for the repair :

- the front brake calliper mountings,
- the front brake callipers.

2. REFITTING OPERATION

Push the front brake calliper piston fully into its housing using the toolBrake calliper piston return tool. (Fre. 1190-01) .

Refit (see 31A, Front axle components, Front brake calliper assembly: Exploded view) :

- the brake pads on the front brake calliper,
- the front brake calliper,
- the font brake calliper bolts,
- the front brake pads guide pins.

Torque tighten(see 31A, Front axle components, Front brake calliper assembly: Exploded view) :

- the font brake calliper bolts,
- the front brake pads guide pins.

3. FINAL OPERATION

Proceed in the reverse order to removal.

Note:

To avoid generating a fault on the brake system with warning light on the dashboard, follow the process below.

Repair-13x03x03x01-01x37-1-42-1.xml

XSL version : 3.02 du 22/07/11

FRONT CENTRE SEAT BELT: REMOVAL - REFITTING

Note, one or more warnings are present in this procedure

WARNING

To avoid all risk of damage to the systems, apply the safety and cleanliness instructions and operation recommendations before carrying out any repair:

Vehicle: Precautions for the repair .

Location and specifications (tightening torques, parts always to be replaced, etc.)Front seat assembly: Exploded view .

REMOVAL

1. REMOVAL PREPARATION OPERATION

Position the front seat towards the front.

Remove the rear left-hand side panel trim acces flapInterior body side trim assembly: Exploded view .

2. REMOVAL OPERATION

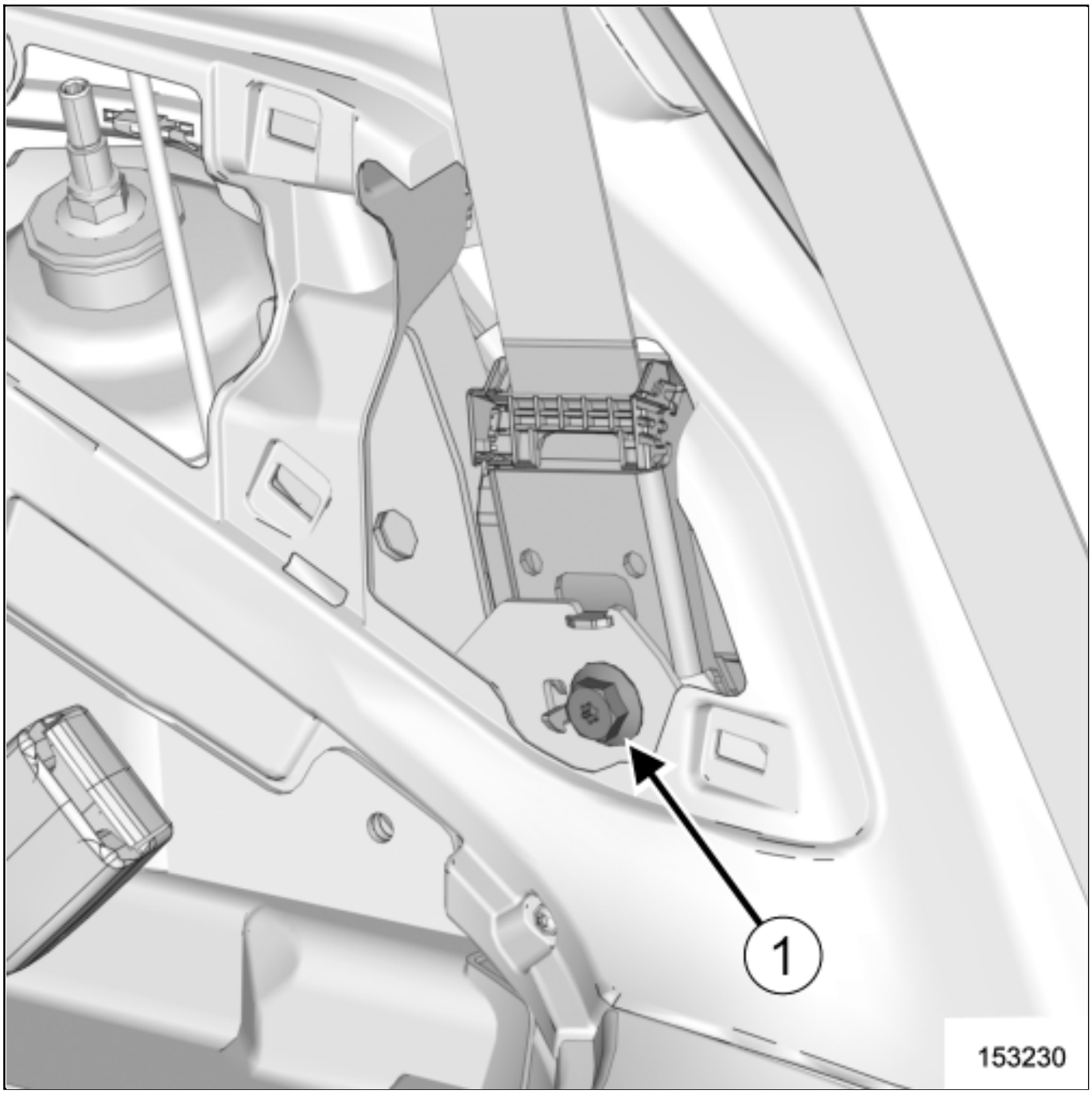

- Remove the front centre inertia reel seat belt bolt(1) .

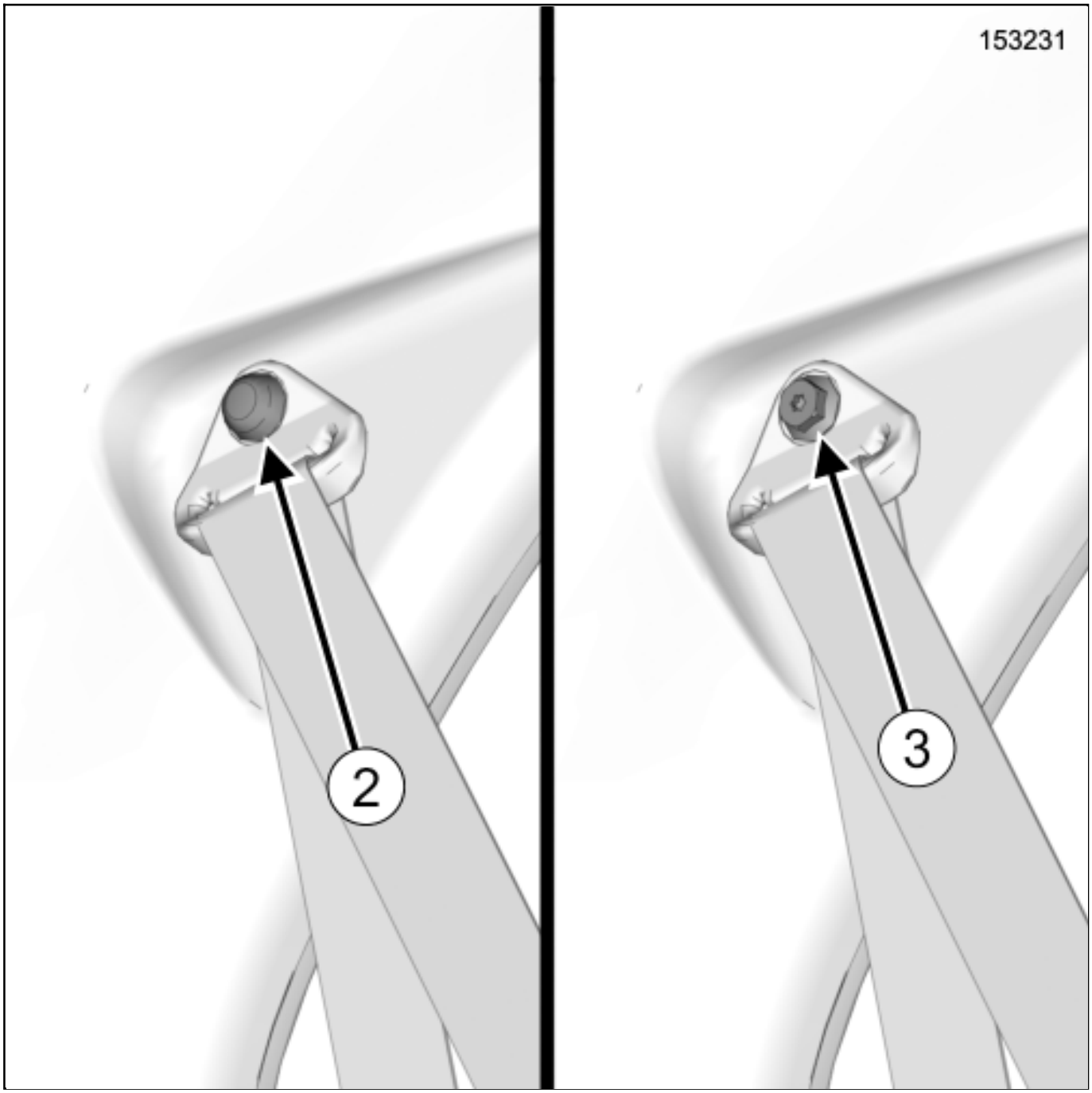

Remove :

- the cover of the seat belt upper bolt(2) ,
- the seat belt upper bolt(3) ,
- the front seat belt return buckle bolt cover[Front seat assembly: Exploded view] ,
- the front seat belt return buckle bolt[Front seat assembly: Exploded view] ,

- the front centre seat belt.

REFITTING

1. REFITTING OPERATION

- Proceed in the reverse order to removal.

- Torque tighten:
  - the seat belt upper bolt21 N.m,
  - the front centre inertia reel seat belt bolt21 N.m.

FRONT DIRECTION INDICATOR BULB: REMOVAL - REFITTING

Note, one or more warnings are present in this procedure

WARNING

To avoid all risk of damage to the systems, apply the safety and cleanliness instructions and operation recommendations before carrying out any repair:

Vehicle: Precautions for the repair .

Location and specification (tightening torques, parts always to be replaced, etc.)(see 80B, Headlights, Front signals - lighting assembly: Exploded view) .

REMOVAL

1. REMOVAL PREPARATION OPERATION

Position the vehicle on a two post lift Vehicle: Towing and lifting .

Remove the door mirrors Door mirror: Removal - Refitting .

Remove the front bumper upper strip Exterior body front trim assembly: Exploded view .

Remove the A-pillar trims Exterior body side trim assembly: Exploded view .

Remove Exterior body front trim assembly: Exploded view :

- the front bumper lower trim,

the front bumper trim.

❑

Disconnect the connectors.

2. REMOVAL OPERATION

❑

Unclip the direction indicator bulb holder(see 80B, Headlights, Front signals - lighting assembly: Exploded view) .

❑

Remove the direction indicator bulb(see 80B, Headlights, Front signals - lighting assembly: Exploded view) .

REFITTING

❑

Proceed in the reverse order to removal.

FRONT DIRECTION INDICATOR BULB: REMOVAL - REFITTING

Note, one or more warnings are present in this procedure

WARNING

To avoid all risk of damage to the systems, apply the safety and cleanliness instructions and operation recommendations before carrying out any repair:

Vehicle: Precautions for the repair .

Location and specification (tightening torques, parts always to be replaced, etc.)(see 80B, Headlights, Front signals - lighting assembly: Exploded view) .

REMOVAL

1. REMOVAL PREPARATION OPERATION

Position the vehicle on a two post lift Vehicle: Towing and lifting .

Remove the front bumper upper strip Exterior body front trim assembly: Exploded view .

Remove the A-pillar trims Exterior body side trim assembly: Exploded view .

Remove Exterior body front trim assembly: Exploded view :

- the front bumper lower trim,
- the front bumper trim.

Disconnect the connectors.

2. REMOVAL OPERATION

- Unclip the direction indicator bulb holder(see 80B, Headlights, Front signals - lighting assembly: Exploded view) .

- Remove the direction indicator bulb(see 80B, Headlights, Front signals - lighting assembly: Exploded view) .

REFITTING

- Proceed in the reverse order to removal.

FRONT DRIVESHAFT HUB CARRIER: REMOVAL - REFITTING

Note, one or more warnings are present in this procedure

WARNING

To avoid all risk of damage to the systems, apply the safety and cleanliness instructions and operation recommendations before carrying out any repair:

- (see 31A, Front axle components, Front axle components: Precautions for the repair) ,
- Vehicle: Precautions for the repair .

Localisation and specification (tightening, torques, parts always to be replaced)(see 31A, Front axle components, Front hub carrier assembly: Exploded view) and(see 31A, Front axle components, Front axle assembly: Exploded view) .

REMOVAL

1. REMOVAL PREPARATION OPERATION

Position the vehicle on a two post lifVehicle: Towing and lifting .

Remove:

- the front wheel on the side concernedWheel: Removal - Refitting ,
- the front wheel arch linerWheel arch liner: Removal - Refitting ,
- the front brake calliper mounting bolts on the side concerned(see 31A, Front axle components, Front brake calliper assembly: Exploded view) .

Move aside the front brake calliper assembly.

Attach the front brake calliper assembly to the shock absorber spring.

2. REMOVAL OPERATION

Remove Steering assembly: Exploded view :

- the track rod end nut,
- the track rod endBall-joint uncoupling tool : Use .

Remove:

- the lower arm ball joint nut and bolt(see 31A, Front axle components, Front axle assembly: Exploded view) ,
- the lower arm ball joint from the stub axle carrierBall-joint uncoupling tool : Use ,
- the shock absorber base nut and bolt(see 31A, Front axle components, Front axle assembly: Exploded view) ,
- the front stub axle carrier(see 31A, Front axle components, Front hub carrier assembly: Exploded view) .

1- IN THE EVENT OF REPLACEMENT

Remove the front brake disc(see 31A, Front axle components, Front hub carrier assembly: Exploded view)
.

REFITTING

1. REFITTING OPERATION

Proceed in the reverse order to removal.

2. FINAL OPERATION

- Control and adjust the front axle assembly **Front axle system: Adjustment** .

Repair-13x02x03x12-01x37-1-38-1.xml

XSL version : 3.02 du 22/07/11

FRONT DRIVESHAFT LOWER ARM BALL JOINT: CHECK

CHECK

1. CHECKING THE FRONT DRIVESHAFT LOWER ARM BALL JOINT

❑ Position the vehicle on a two-post liftVehicle: Towing and lifting .

1- CHECKING THE CONDITION OF THE LOWER ARM BALL JOINT GAITER

❑ If the lower arm ball joint gaiter of the front driveshaft is in poor condition or not crimped, replace the lower arm of the front driveshaft(see **Front driveshaft lower arm: Removal - Refitting**) .

❑ If the lower arm ball joint gaiter of the front driveshaft is in poor condition or not crimped, replace the lower arm of the front driveshaft(see **Front driveshaft lower arm: Removal - Refitting**) .

2- CHECKING THE FITTING OF THE LOWER ARM BALL JOINT

❑ If the lower arm ball joint is not fitted correctly, replace the lower arm ball joint(see **Front driveshaft lower arm ball joint: Removal - Refitting**) .

3- CHECKING THE LONGITUDINAL PLAY OF THE LOWER ARM BALL JOINT

4- CHECKING THE PLAY OF THE LOWER ARM BALL JOINT

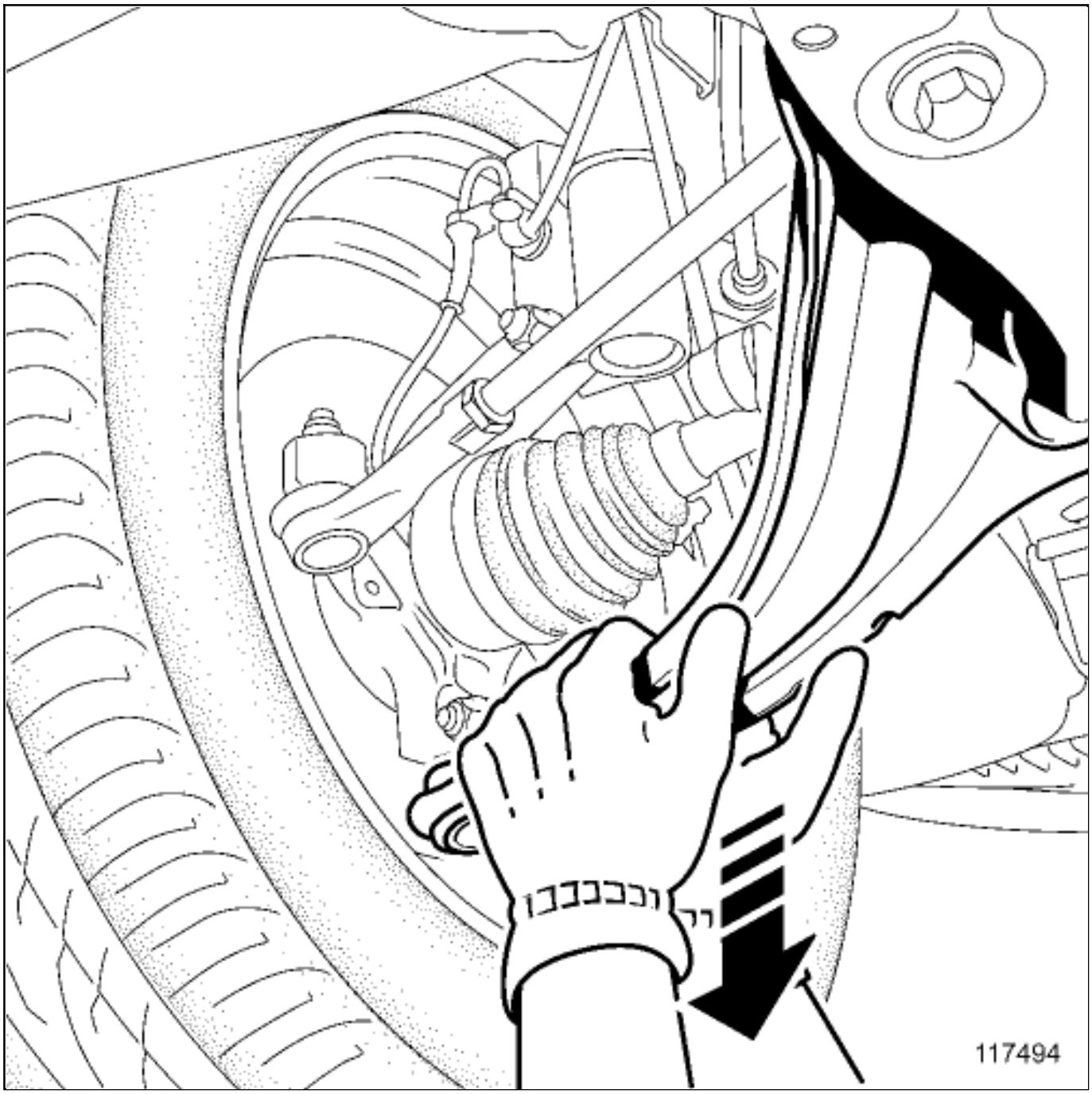

Check that there is no play in the front driveshaft lower arm ball joint:

- from a position underneath the vehicle,
- using both hands, hold the front driveshaft lower arm as close as possible to the wheel,
- push downwards several times.

If there is play in the front driveshaft lower arm ball joint, replace the front driveshaft lower arm(see **Front driveshaft lower arm: Removal - Refitting**) .

2. FINAL OPERATION

Repair-13x02x03x10-01x58-1-13-1.xml

XSL version : 3.02 du 22/07/11

FRONT END LOWER CROSS MEMBER: REPLACEMENT

Note, one or more warnings are present in this procedure

WARNING

DANGER: HIGH VOLTAGE VEHICLE.

Risks of serious burns or electric shock that may prove fatal.

Before carrying out any work on the vehicle, it is essential that you adhere to the instructions regarding vehicle voltage cut-off. This work must be carried out by an employee who is qualified and authorized to work on a high-voltage onboard network Vehicle: Precautions for the repair .

1. COMPOSITION OF THE SPARE PART

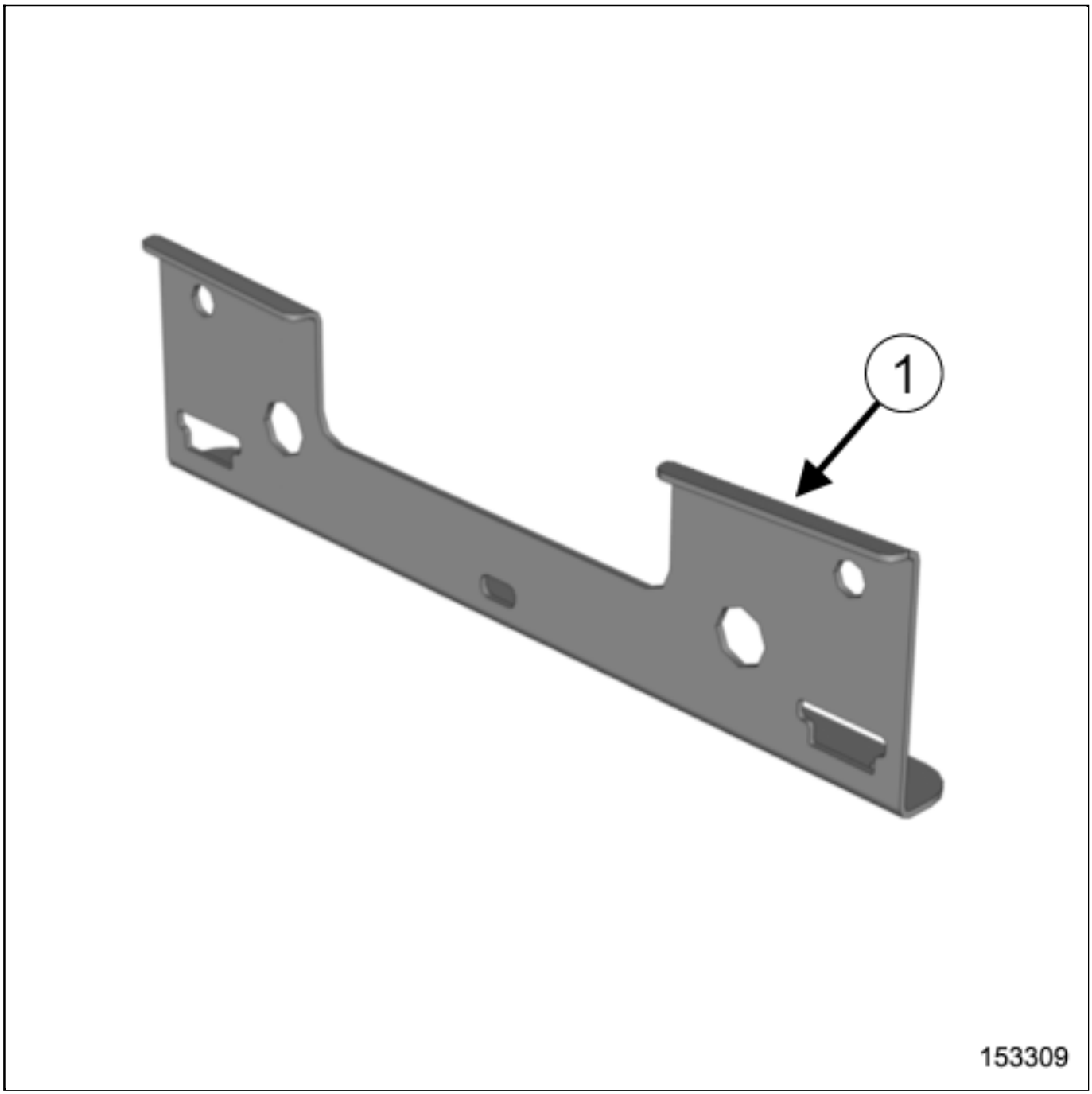

No.	Description	Type	Thickness (mm)
(1)	Front axle anti-roll bar support	XE	2.5

2. IN THE EVENT OF REPLACEMENT

The option for replacing this part is as follows:

- complete replacement.

CAUTION

If the mating faces of the parts to be welded are not accessible, use a GMAW plug weld in place of the original electrical resistance weld**Connections by arc welding under shielding gas: Description** (MR 400, 40C, Gas metal arc welded connections (GMAW)).

1- POSITION OF ELECTRIC EARTHS

CAUTION

To avoid damaging the vehicles electric and electronic components, the earths of any wiring harness near the weld area must be disconnected.

Position the earth of the welding machine as close as possible to the weld area**Earth screw connection: Description** (MR 400, 40H, Bolted connections).

Locate the earths located near to the weld area**Earths on body: List and location of components** .

2- COMPLETE REPLACEMENT

Note:

The repair bench does not have to be used, on condition that the side members have not been affected by the impact.

1)PART IN POSITION

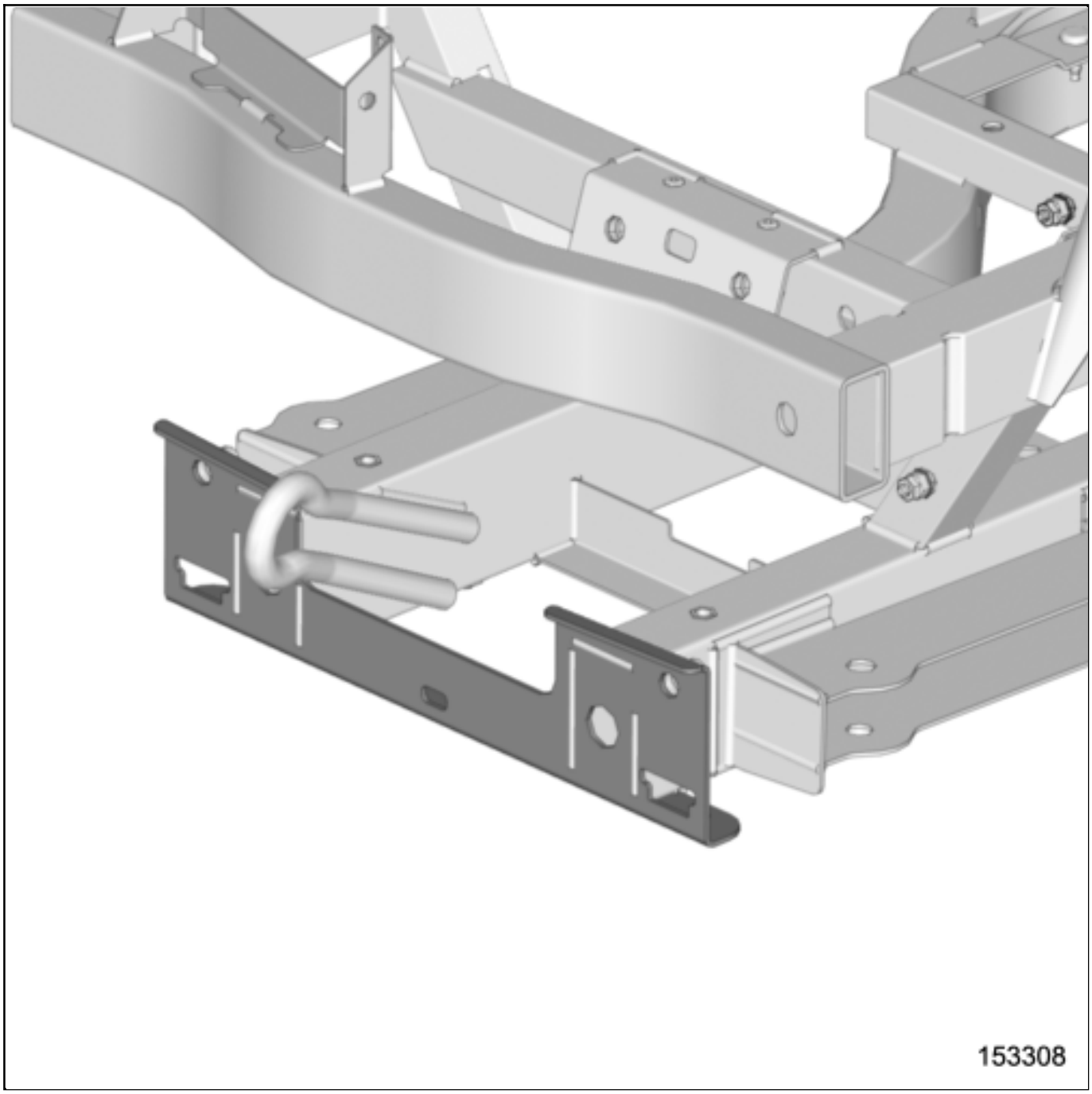
153308

FRONT HEADREST: REMOVAL - REFITTING

Note, one or more warnings are present in this procedure

Special tooling required	
Set of trim removal levers.	Car. 1363

WARNING

To avoid all risk of damage to the systems, apply the safety and cleanliness instructions and operation recommendations before carrying out any repair:

Vehicle: Precautions for the repair .

Location and specifications (tightening torques, parts always to be replaced, etc.)Front seat assembly: Exploded view .

REMOVAL

1. REMOVAL OPERATION

1
153239

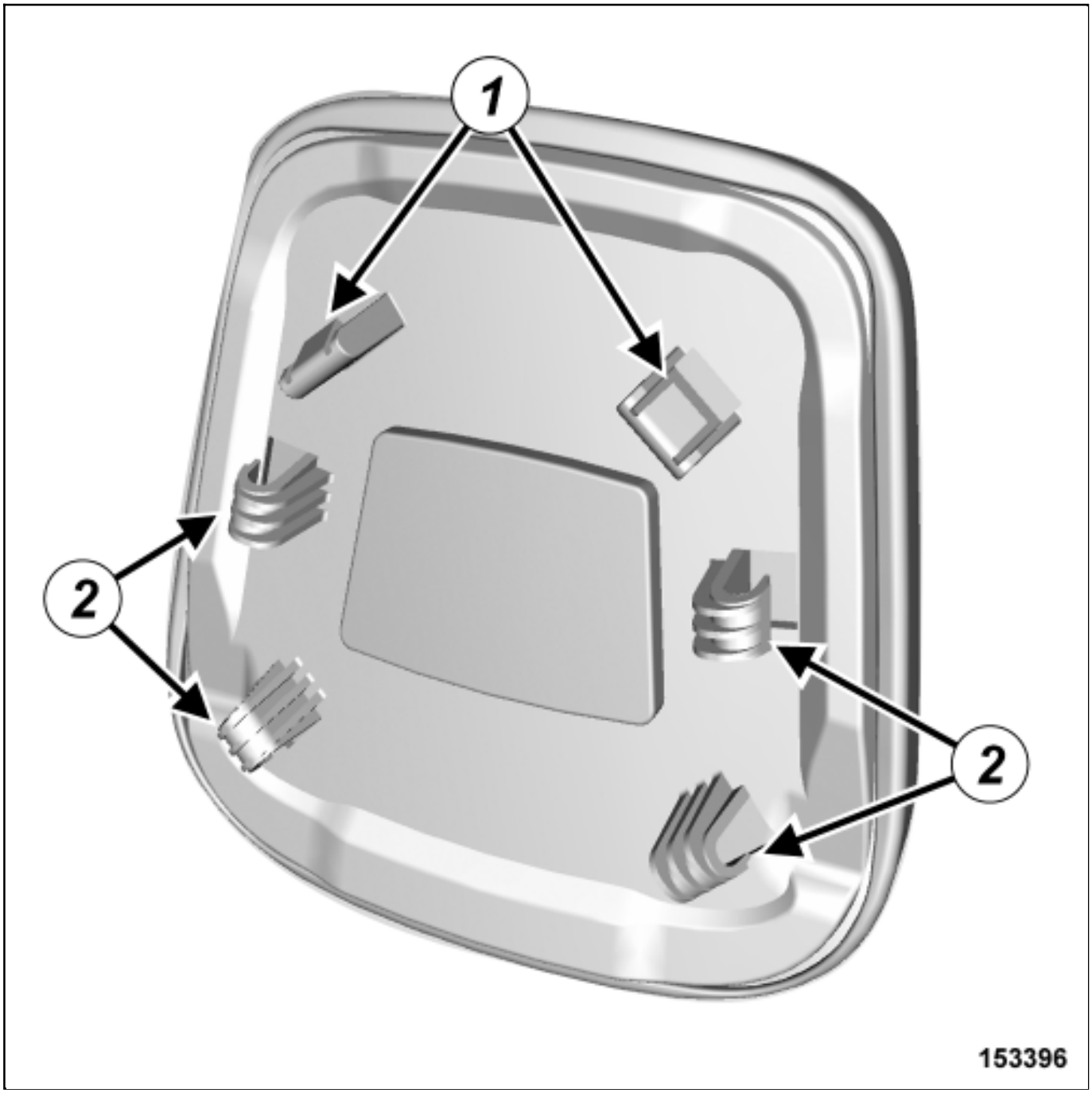

- Unclip the front headrest with the toolSet of trim removal levers.(Car. 1363) , begining by the upper clips (1) and (2) .

- Remove the front headrest.

REFITTING

Proceed in the reverse order to removal.

Repair-70x18x02x06-01x37-1-9-1.xml

XSL version : 3.02 du 22/07/11

FRONT HUB CARRIER ASSEMBLY: EXPLODED VIEW

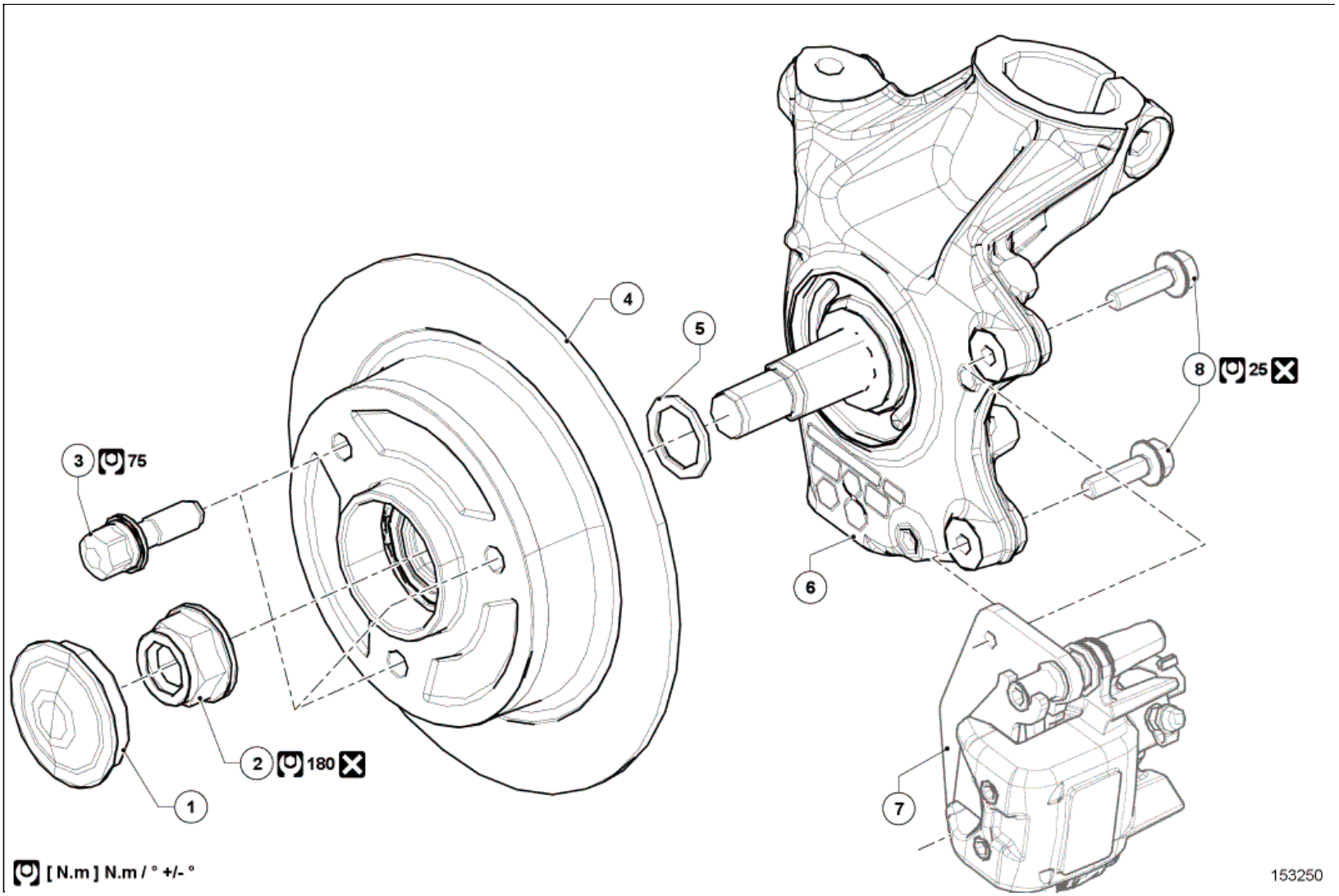

Illustration key: Description .

Marks	Designations	Informations
1	Front brake disc blanking plug	
2	Front stub axle nut	
3	Front wheel bolts	
4	Front brake disc	(see 31A, Front axle components, Front brake disc: Removal - Refitting)
5	Front stub axle carrier bearing washer	
6	Front stub axle carrier	(see 31A, Front axle components, Front driveshaft hub carrier: Removal - Refitting)
7	Front brake calliper	(see 31A, Front axle components, Front brake calliper assembly: Exploded view)
8	Front brake calliper mounting bolts	

FRONT OPENING ELEMENT LOCK: REMOVAL - REFITTING

REMOVAL

1. REMOVAL PREPARATION OPERATION

- Open the front side door.

- Remove Exterior front side opening element assembly: Exploded view :
  - the door mirror trim,
  - the door mirror,
  - the front door exterior panel,
  - the front door hinge bolts,
  - the front side door,
  - the front door interior opening handle,
  - the front door panel trim.

2. REMOVAL OPERATION

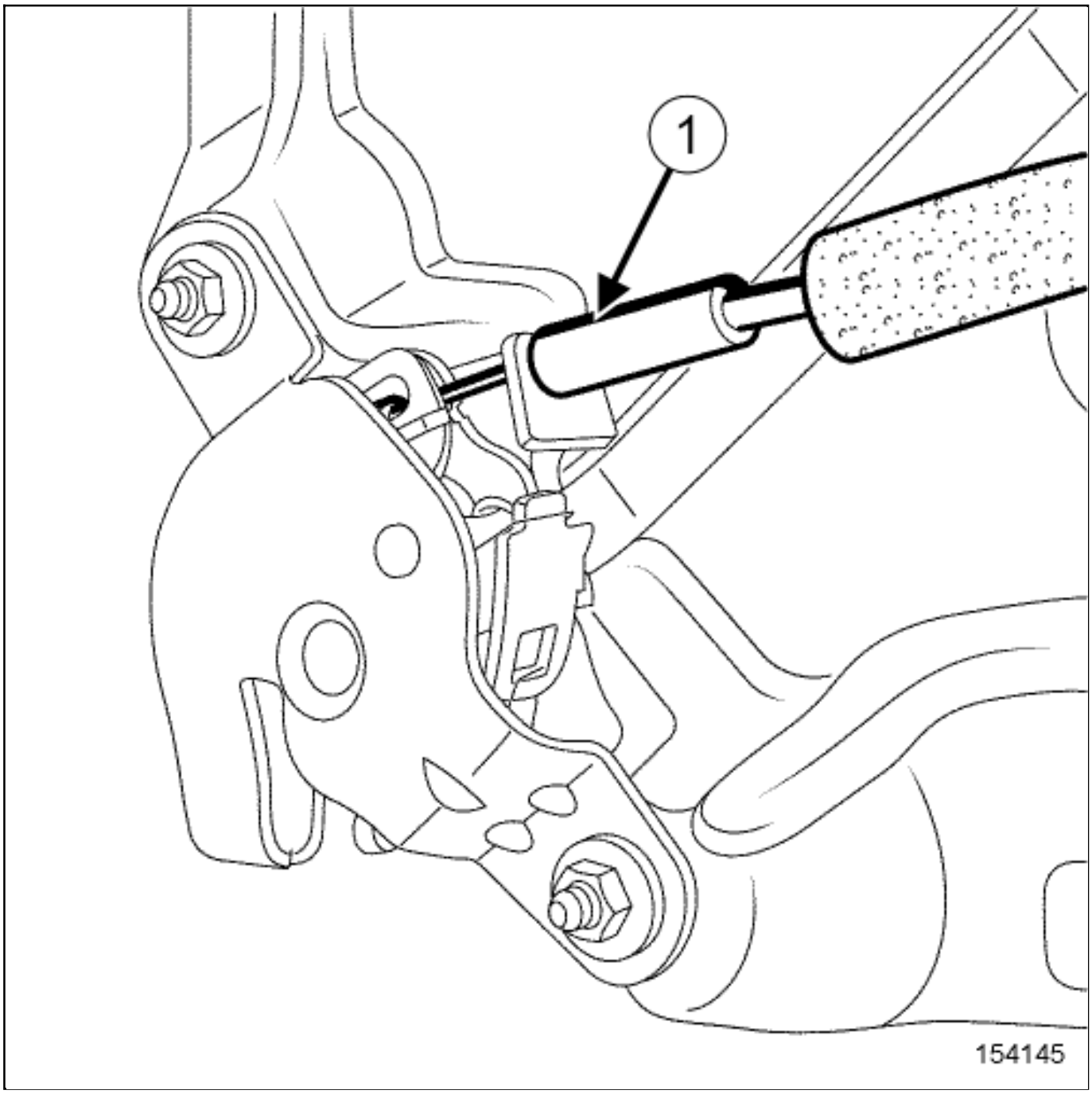
1
154145

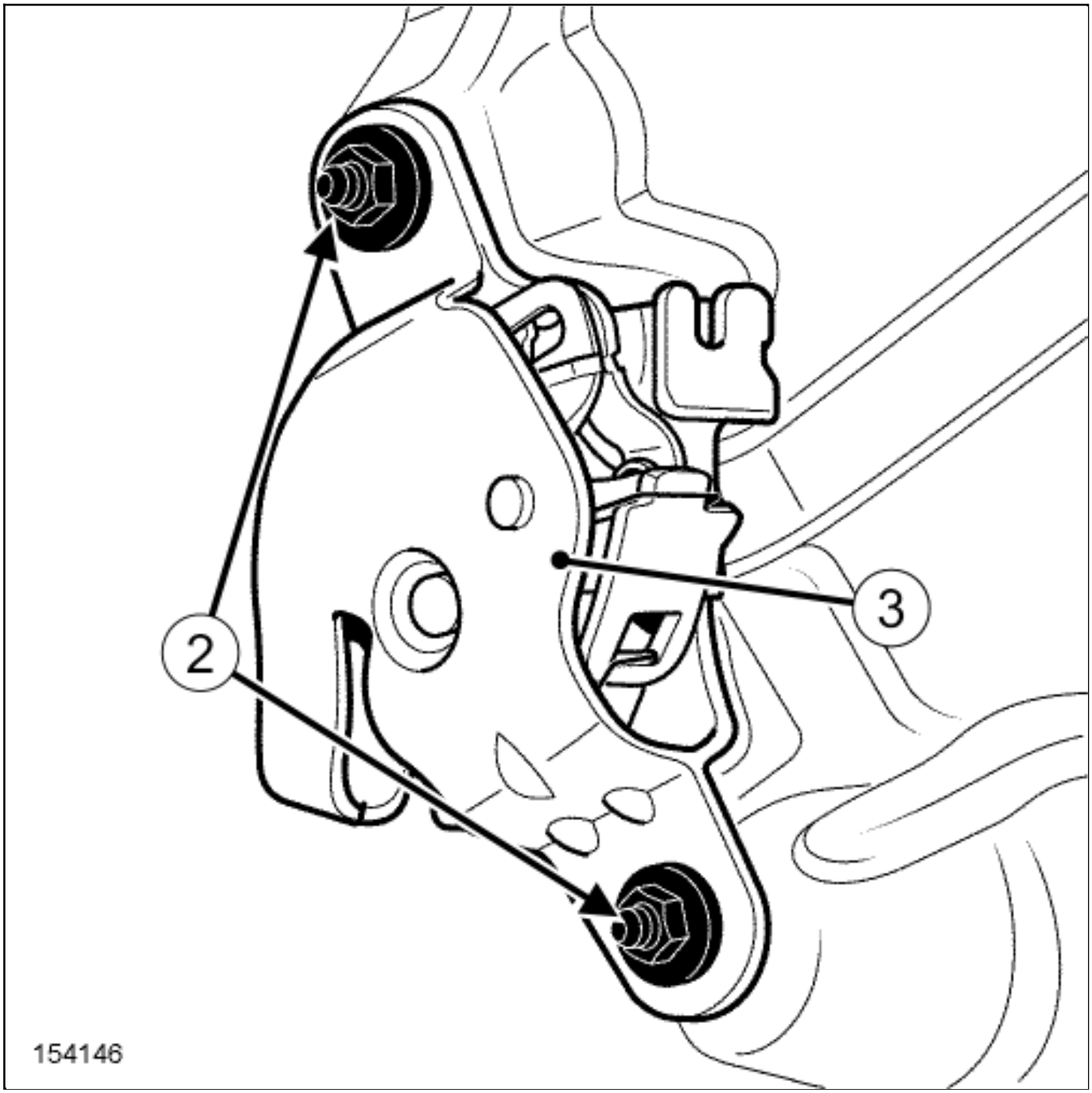

- Unclip the sleeve stop at(1) .
- Unhook the lock opening cable.
- Remove:
  - the front side door lock bolts(2) ,

the front side door lock(3) .

REFITTING

1. REFITTING OPERATION

Refit:

- the front side door lock,
- the front side door lock bolts,
- the lock opening cable.

2. FINAL OPERATION

Proceed in the reverse order to removal.

Repair-50x03x02x03-01x37-1-2-1.xml

XSL version : 3.02 du 22/07/11

FRONT OPENING ELEMENT OPENING CONTROL: REMOVAL - REFITTING

Location and specification (tightening torques, parts always to be replaced, etc.)Exterior front side opening element assembly: Exploded view .

REMOVAL

1. REMOVAL OPERATION

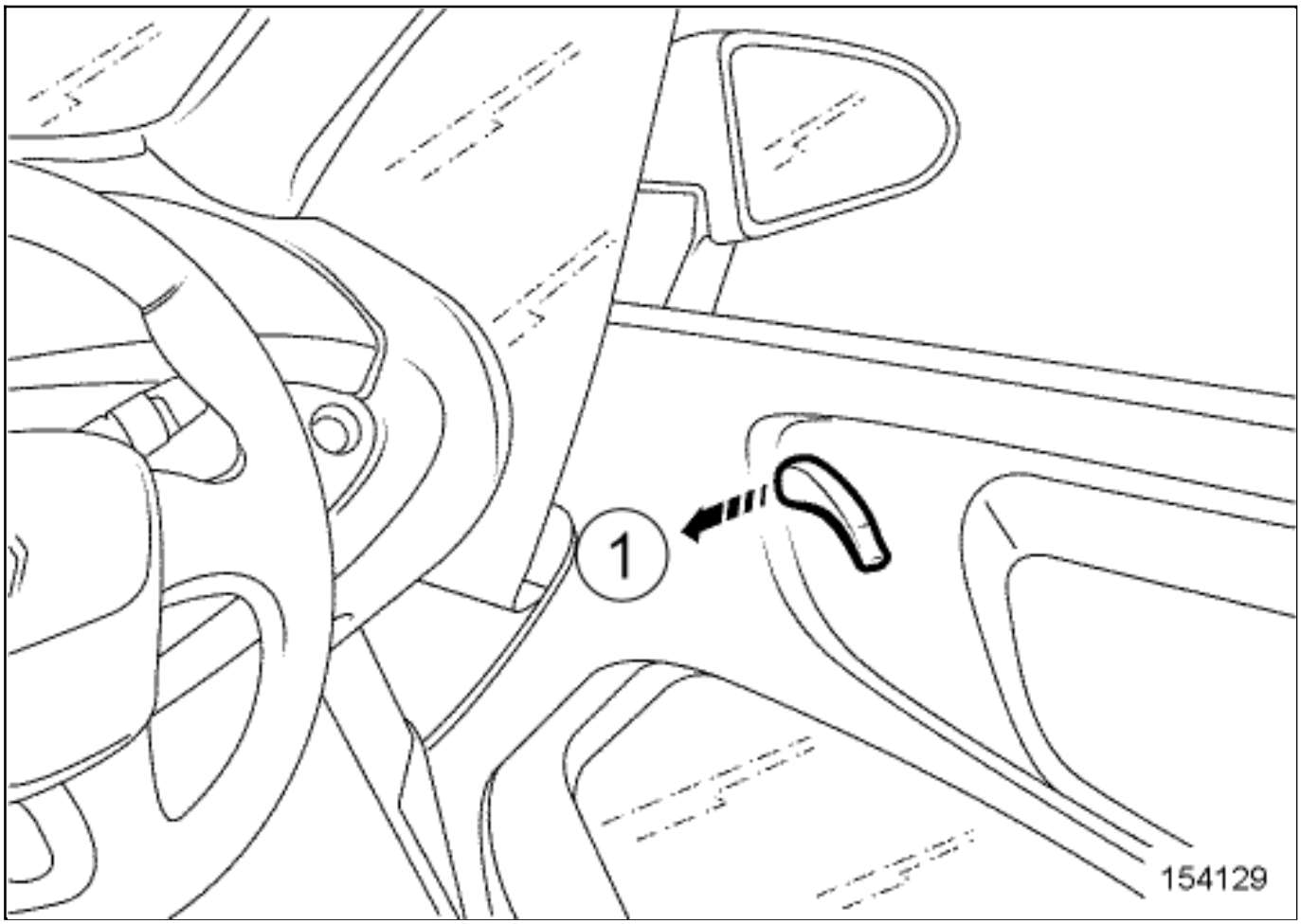

- Remove the front door interior opening handle by extracting following the direction of the arrow(1) .

REFITTING

Proceed in the reverse order to removal.

Repair-50x03x02x01-01x37-1-1-1.xml

XSL version : 3.02 du 22/07/11

FRONT OPENING ELEMENT STRIKER PANEL: REMOVAL - REFITTING

REMOVAL

1. REMOVAL PREPARATION OPERATION

- Open the front side door.

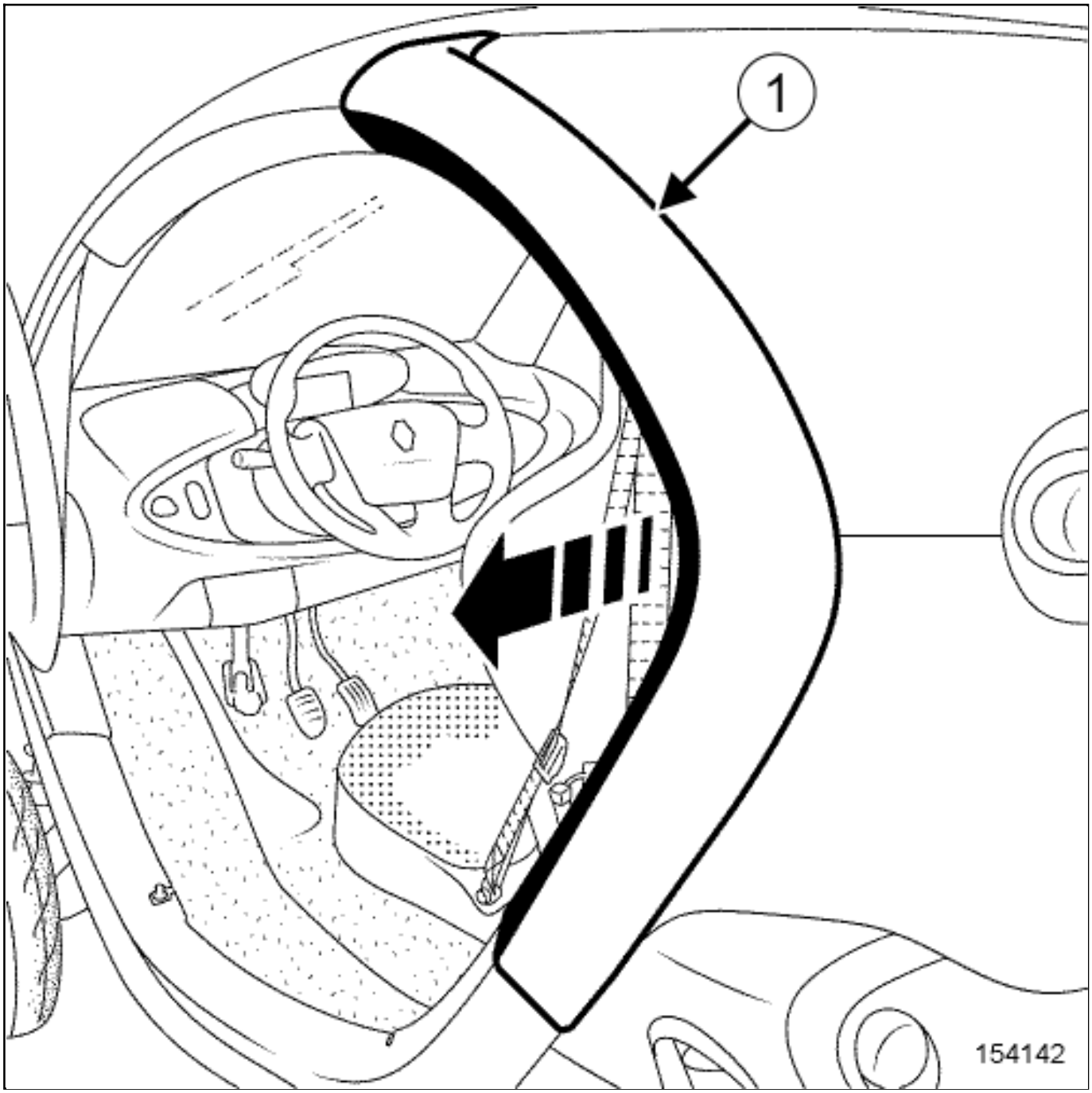

-

Remove the B-pillar trim(1) from the side concerned Exterior body side trim assembly: Exploded view .

2. REMOVAL OPERATION

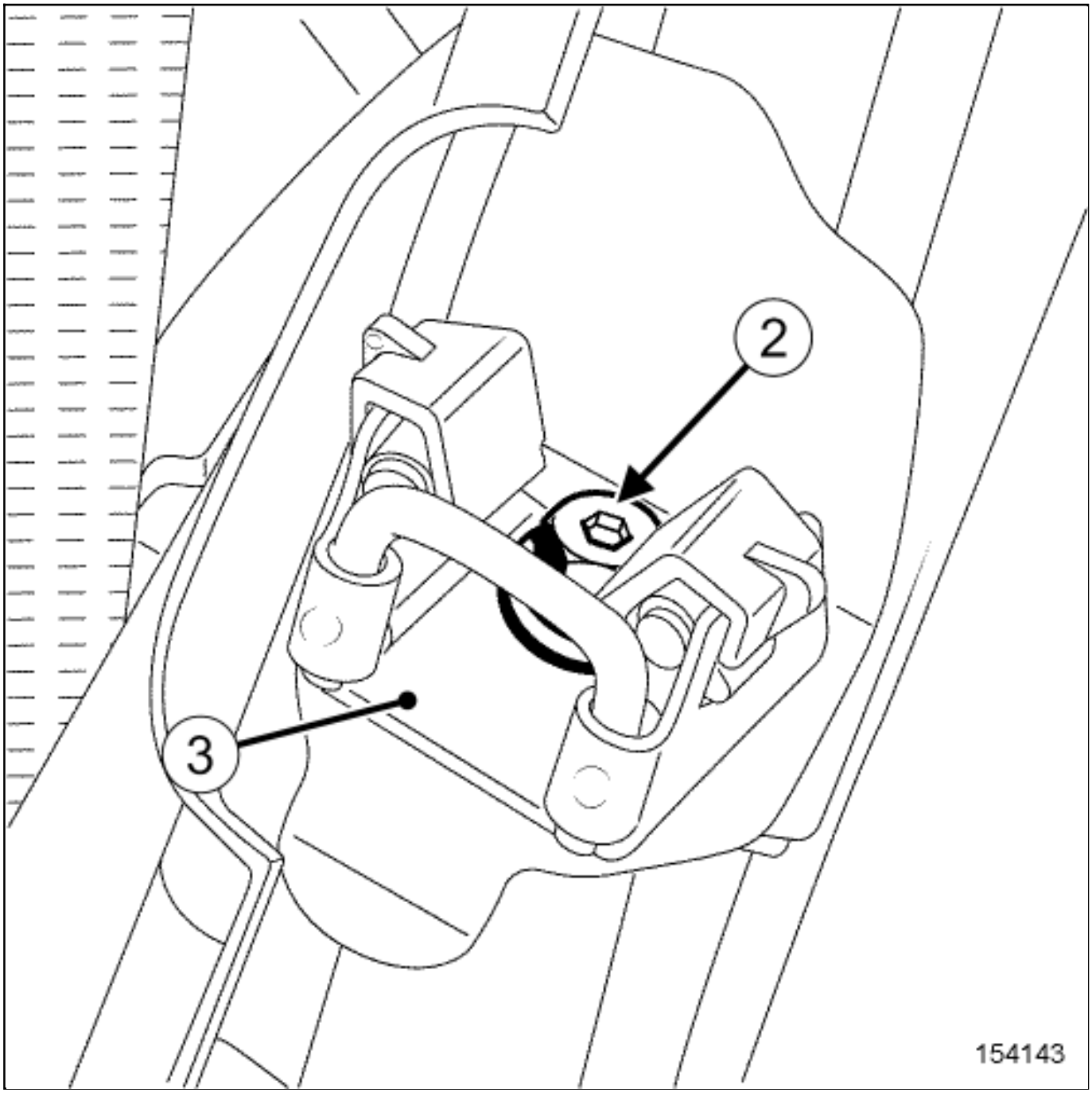

- Before removal, mark the position of the front side door striker panel.

- Remove:
  -

- the striker panel bolt(2) ,

  the striker panel(3) .

REFITTING

1. REFITTING PREPARATION OPERATION

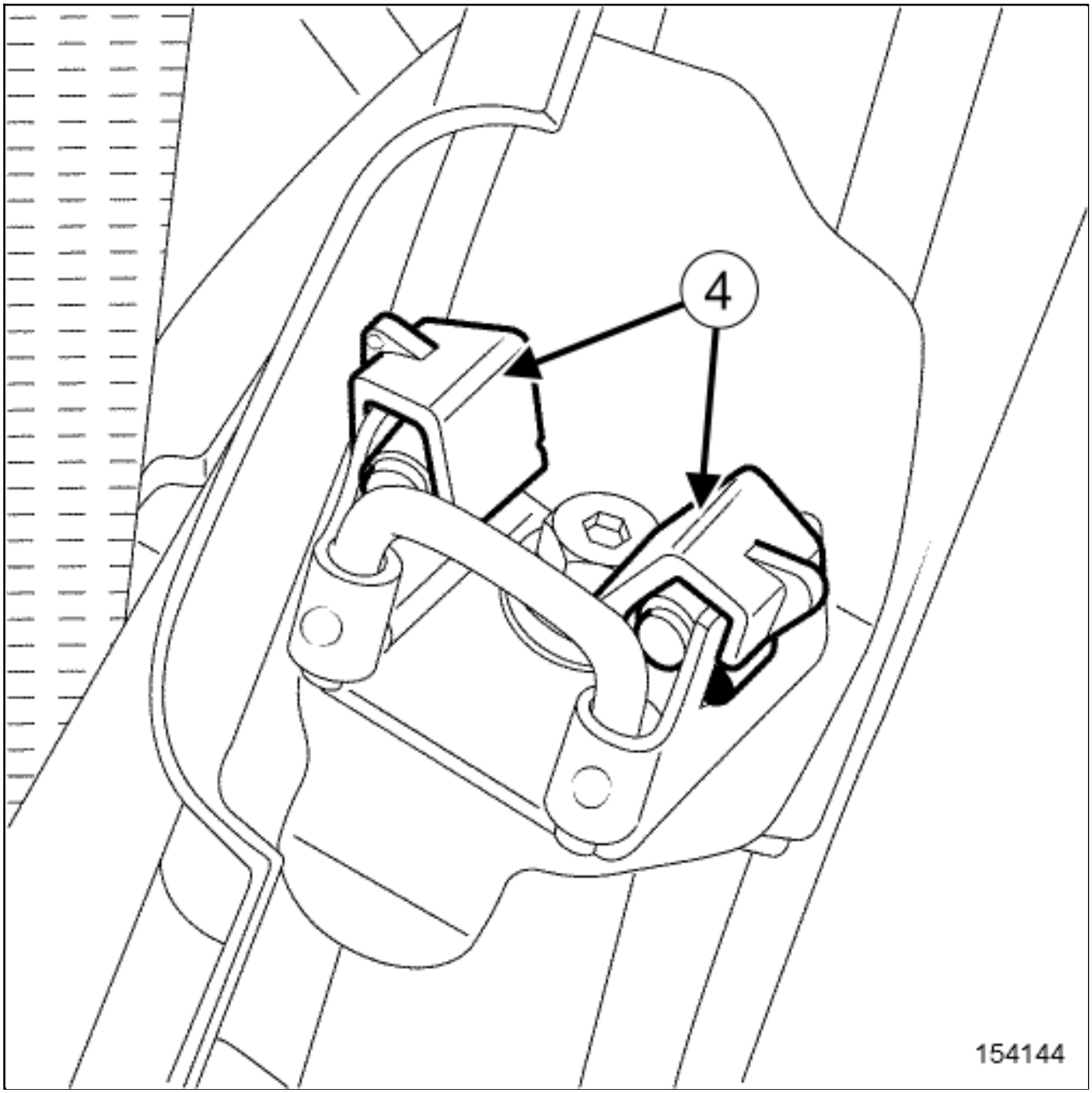

Check that the stops(4) of the boot lid striker panel are present and in good condition.

Note:

If a stop is damaged (wear, tearing, etc.), replace the two stops of the boot lid striker panel.

2. REFITTING OPERATION

- Torque tighten the striker panel bolt21 N.m.
- Proceed in the reverse order to removal.
- Adjust the panel gaps of the front side door.

FRONT OPENING ELEMENT STRUT: REMOVAL - REFITTING

Note, one or more warnings are present in this procedure

REMOVAL

1. REMOVAL PREPARATION OPERATION

Remove Exterior front side opening element assembly: Exploded view :

- the door mirror trim,
- the door mirror,
- the front side door exterior panel,
- the front side door bolts on hinge,
- the front side door.

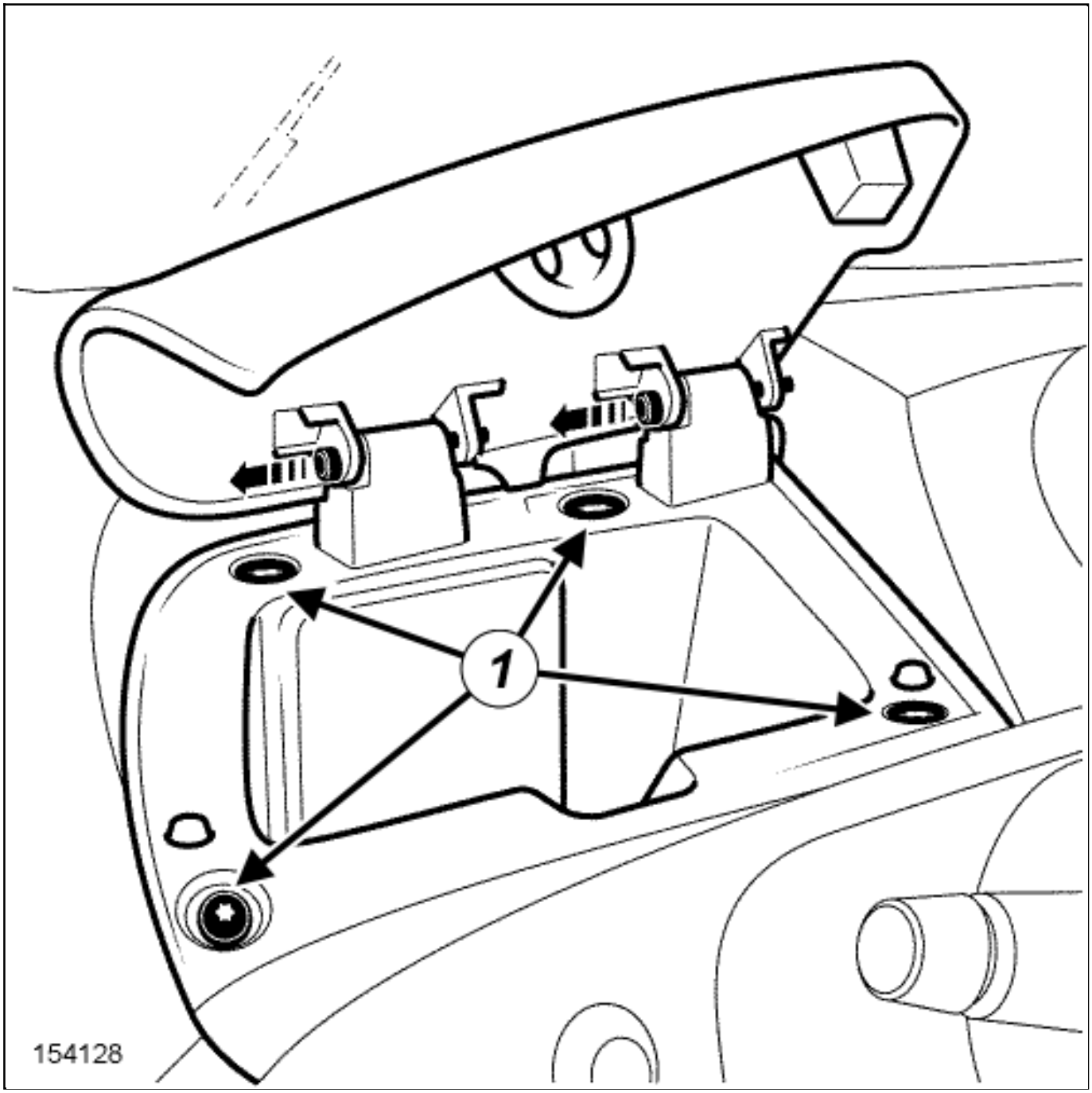

- Pull the glovebox cover hinge pins by extracting them following the direction of the arrow.
- Remove the glovebox screws(1) .
- Disconnect the connectors under the glovebox.
- Remove the glovebox.

2. REMOVAL OPERATION

CAUTION

The strut is fitted in such a way as to prevent leaks. Note the strut's direction of fitting (position of the body and cylinder rod) before removing it, in order to refit the strut identically during the refitting operation.

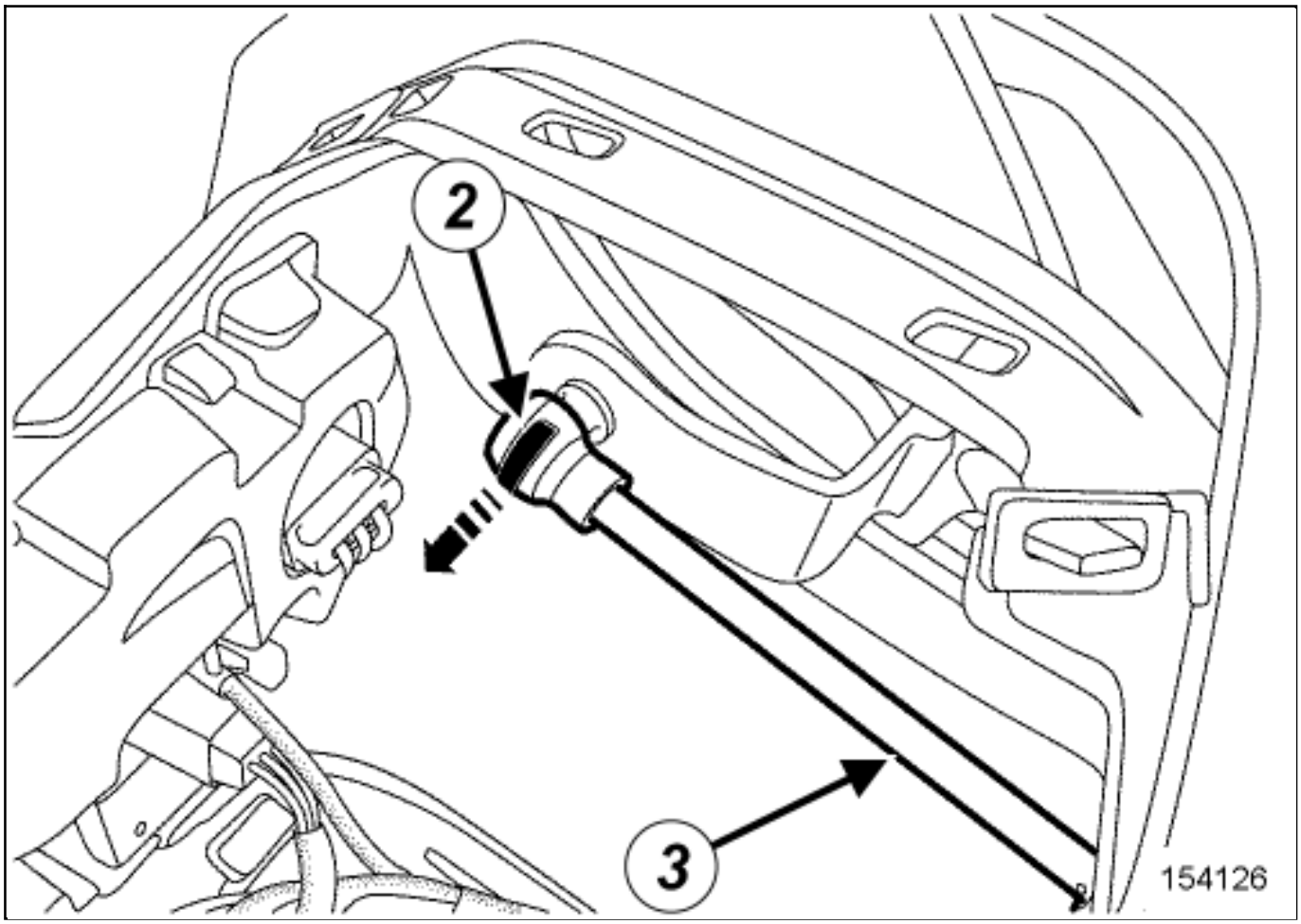

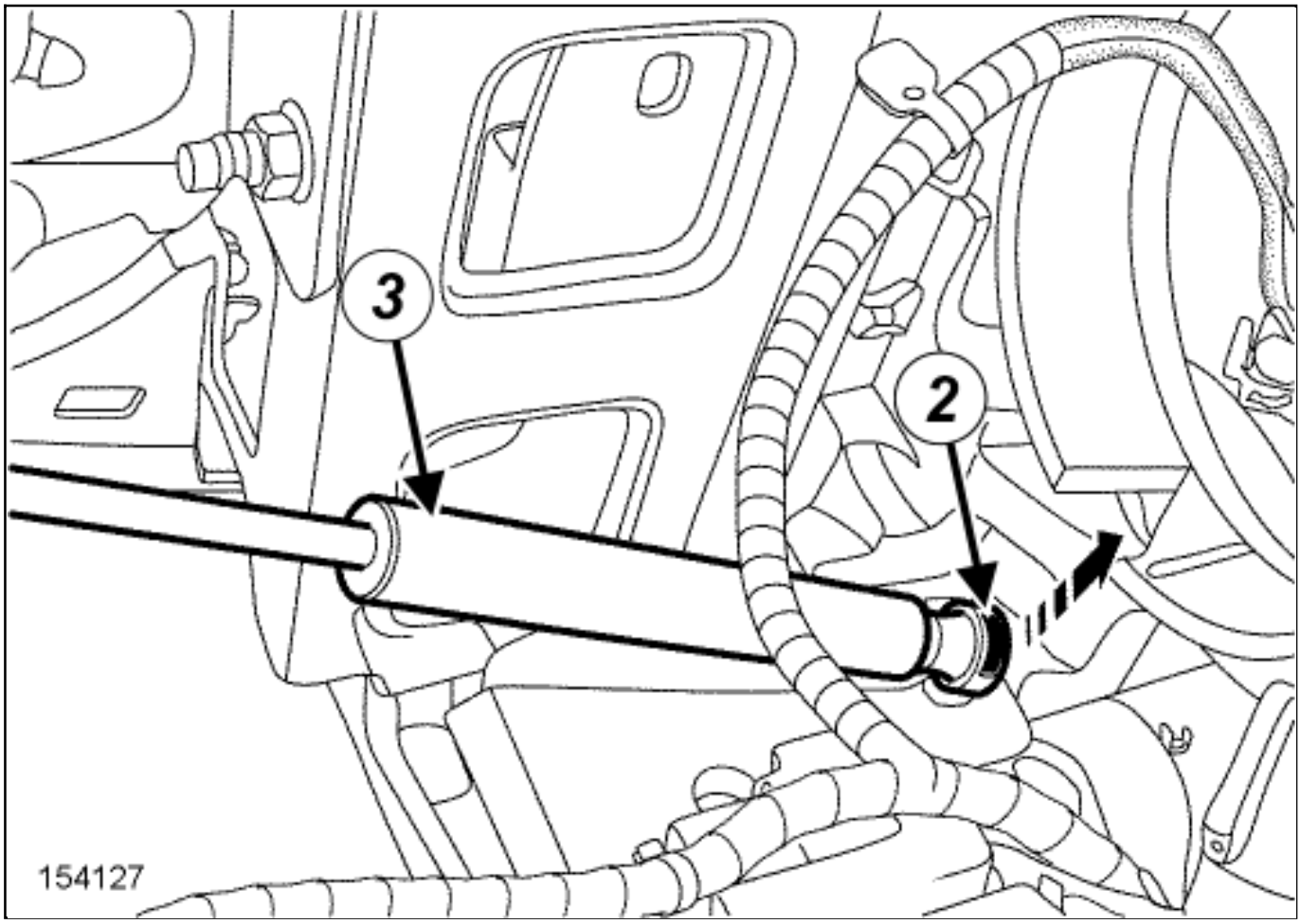

- Unclip the strut clips(2) , without removing them.
- Remove the front opening element strut(3) .

REFITTING

1. REFITTING PREPARATION OPERATION

- Position the clips on the front opening element strut.

2. REFITTING OPERATION

-

Refit the front element opening strut.

Proceed in the reverse order to removal.

Repair-50x03x02x19-01x37-1-1-1.xml

XSL version : 3.02 du 22/07/11

FRONT SEAT ASSEMBLY: EXPLODED VIEW

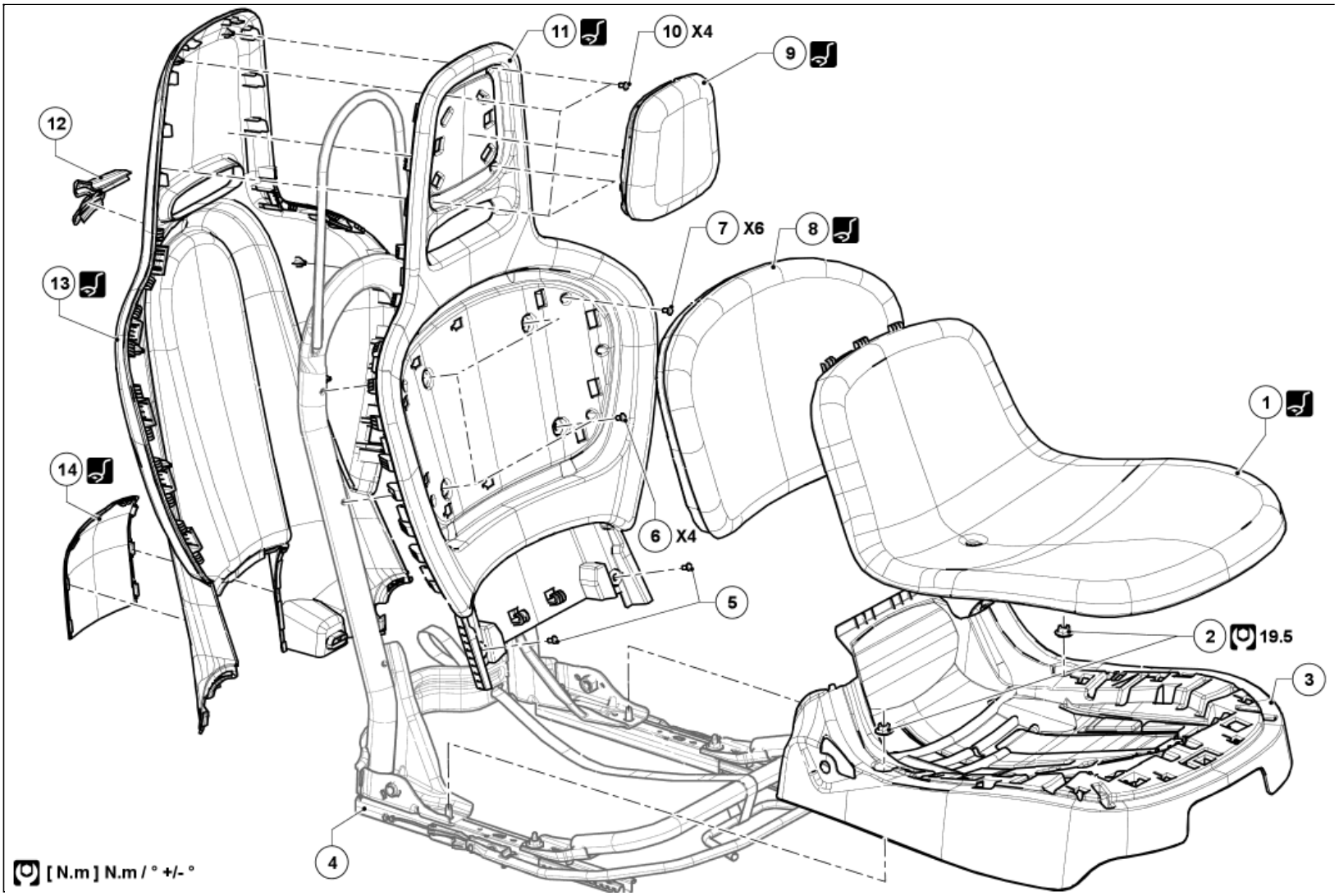

Illustration key: Description .

For fastenings with no specified tightening torque values, refer to the Table of Standard TorquesTightening torques: General information .

Marks	Designations	Informations
1	Front seat base trim	(Car. 1363) Front seat base trim: Removal - Refitting
2	Front seat base casing nuts	
3	Front seat base casing	
4	Front seat frame	(see 75A, Front seat frames and mechanisms, Front seat frame: Removal - Refitting)
5	Front seatback front casing rivets on front seat frame	
6	Front seatback front casing rivets on front seat frame	
7	After Sales screws of front seatback front casing on front seatback rear casing	
8	Front seatback trim	(Car. 1363) Front seatback trim: Removal - Refitting
9	Front seat headrest trim	(Car. 1363) Front headrest: Removal - Refitting
10	After Sales screws of front seatback front casing on front seatback rear casing	
11	Front seatback front casing	(Car. 1363) (see 75A, Front seat frames and mechanisms, Front seatback frame: Removal - Refitting)
12	Front seat belt deflector	
13	Front seatback rear casing	(Car. 1363) Front seatback casing: Removal - Refitting
14	Front seat belt inertia reel cover	(Car. 1363)

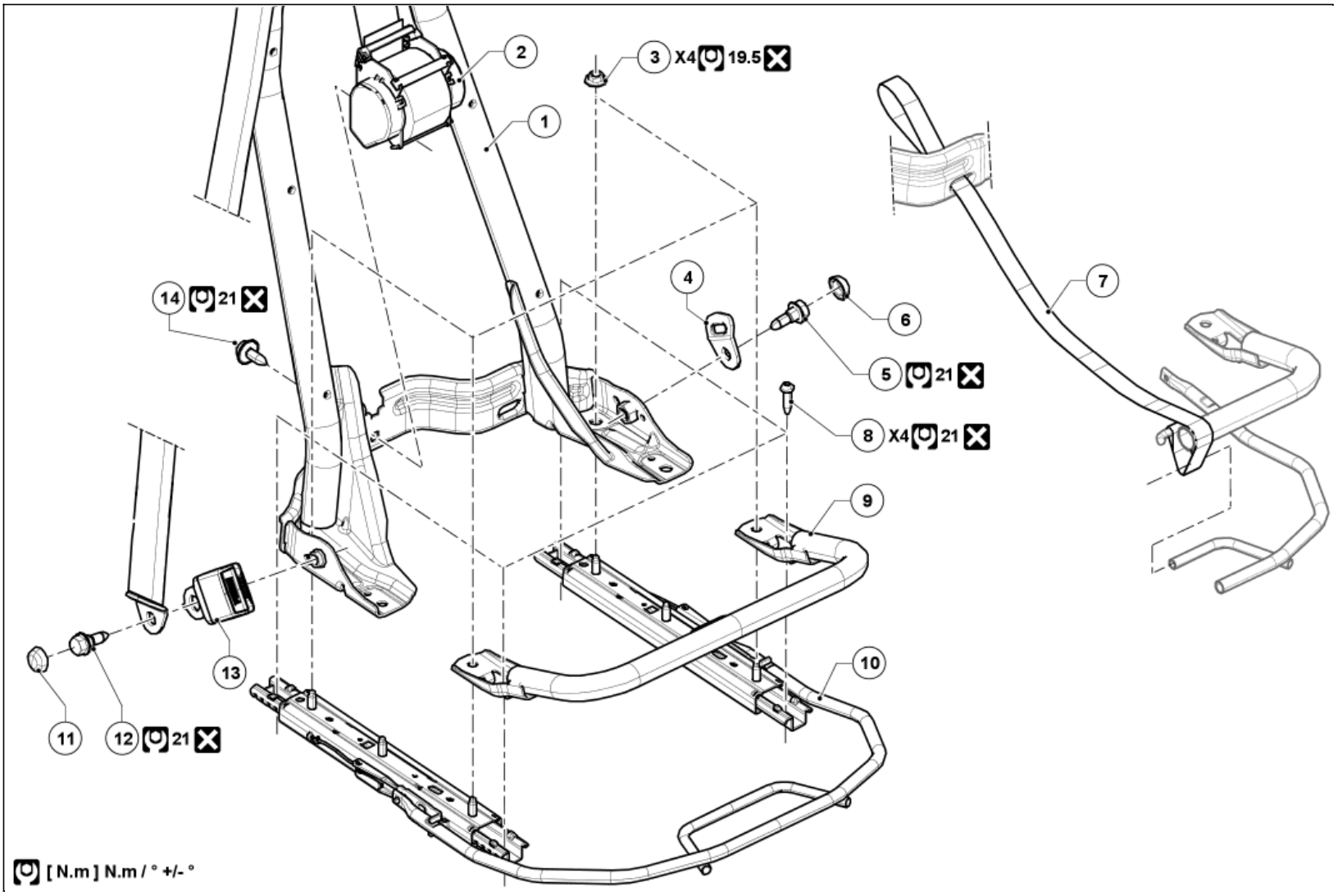

Illustration key: Description .

Marks	Designations	Informations
1	Front seatback frame	(see 75A, Front seat frames and mechanisms, Front seat frame: Removal - Refitting)
2	Front seat belt	Front side seat belt: Removal - Refitting
3	Front seat runner nuts on front seat frame	
4	Front seat belt return buckle	
5	Front seat belt return buckle bolt	
6	Front seat belt return buckle bolt cover	
7	Control strap of front seat runners	
8	Front seat bolts on body	
9	Front seat base frame	(see 75A, Front seat frames and mechanisms, Front seat frame: Removal - Refitting)
10	Front seat runner	(see 75A, Front seat frames and mechanisms, Front seat runner: Removal - Refitting)
11	Front seat belt buckle bolt cover	
12	Front seat belt buckle bolt	
13	Front seat belt buckle	
14	Front seat belt inertia reel bolt	

FRONT SEAT BASE TRIM: REMOVAL - REFITTING

Note, one or more warnings are present in this procedure

Special tooling required	
Set of trim removal levers.	Car. 1363

WARNING

To avoid all risk of damage to the systems, apply the safety and cleanliness instructions and operation recommendations before carrying out any repair:

Vehicle: Precautions for the repair .

Location and specifications (tightening torques, parts always to be replaced, etc.)Front seat assembly: Exploded view .

REMOVAL

1. REMOVAL OPERATION

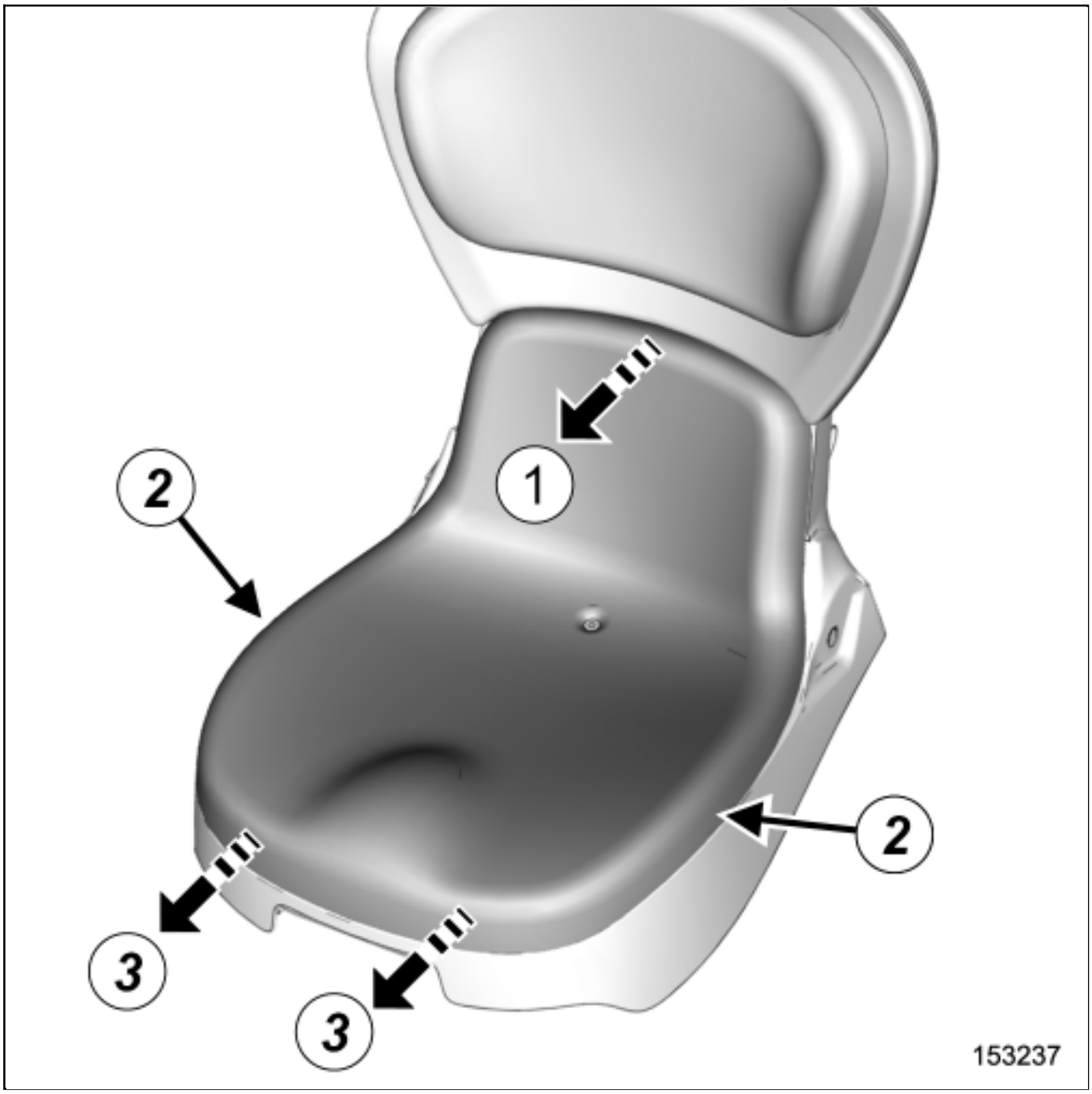
1
2
2
3
3
153237

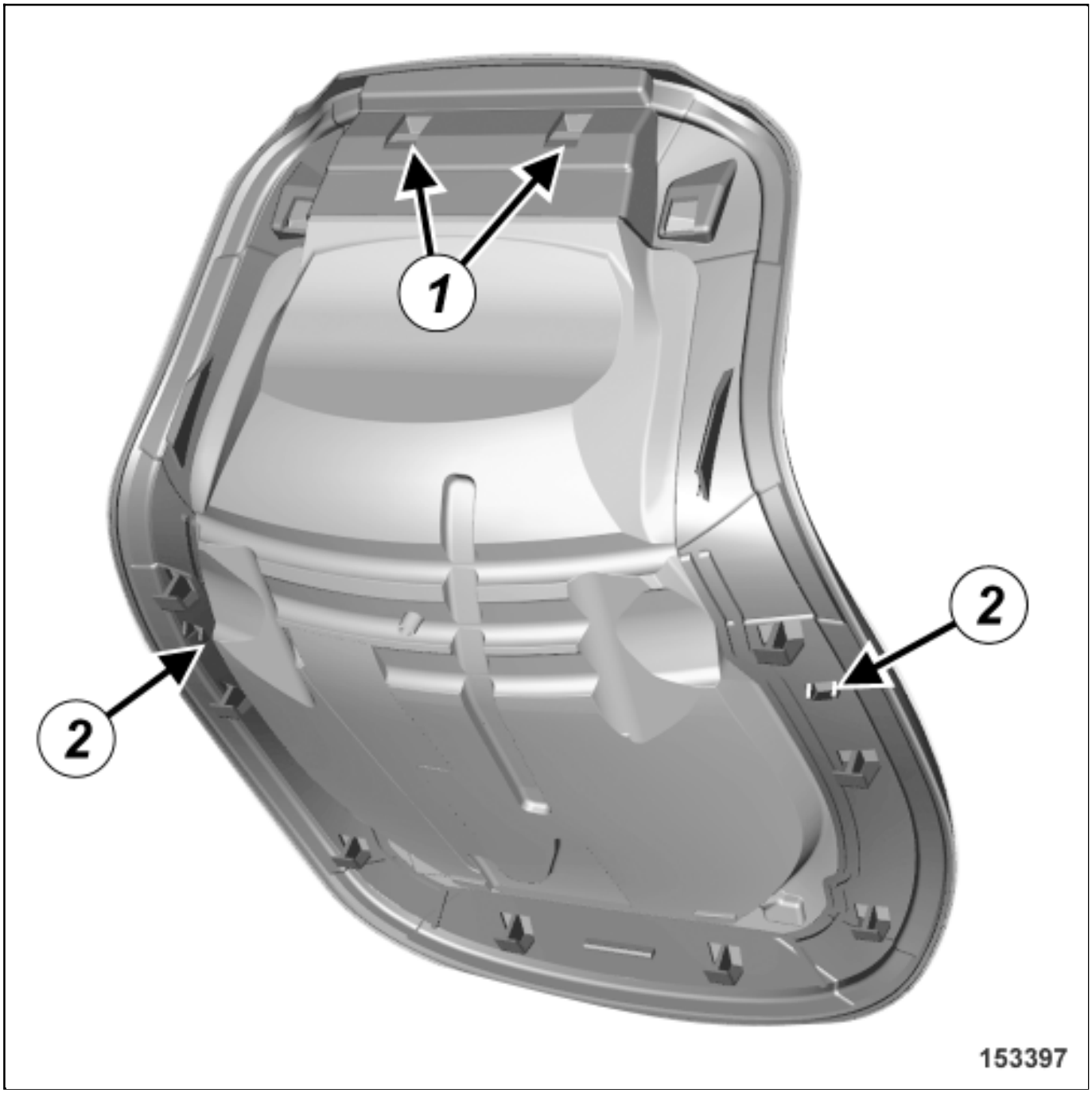

- Unclip the front seat base trim upper section(1) using the toolSet of trim removal levers.(Car. 1363) .
- Unclip the front seat base trim side section(2) using the toolSet of trim removal levers.(Car. 1363) .
- Remove the front seat base trim by sliding it in the direction of the arrow(3) .

REFITTING

Proceed in the reverse order to removal.

Repair-70x10x02x02-01x37-1-36-1.xml

XSL version : 3.02 du 22/07/11

FRONT SEAT FRAME: REMOVAL - REFITTING

Note, one or more warnings are present in this procedure

WARNING

- To avoid all risk of damage to the systems, apply the safety and cleanliness instructions and operation recommendations before carrying out any repair:
  - Vehicle: Precautions for the repair .

Location and specifications (tightening torques, parts always to be replaced, etc.)(see 75A, Front seat frames and mechanisms, Front seat assembly: Exploded view) .

REMOVAL

1. PREPARATION OPERATION

- Remove (see 75A, Front seat frames and mechanisms, Front seat assembly: Exploded view) :
  - the front seat belt buckle bolt,
  - the front seat belt buckle,
  - the front seat belt return buckle bolt,
  - the front seat belt return buckle,
  - the front seat base trim,
  - the front seatback trim,
  - the front seat base casing nuts,

- the front seat base casing,
- the front seat bolts on body,
- the front seat.

2. REMOVAL OPERATION

Remove (see 75A, Front seat frames and mechanisms, Front seat assembly: Exploded view) :

- the front seat belt inertia reel cover,
- the front seat belt inertia reel bolt,
- the front seat belt,
- the front seatback rear casing,
- the front seatback front casing rivets on front seat frame,
- the front seatback front casing,
- the control strap of front seat runners,
- the front seatback frame,
- the front seat base frame,
- the front seat runner.

REFITTING

Proceed in the reverse order to removal.

XSL version : 3.02 du 22/07/11

FRONT SEAT RUNNER: REMOVAL - REFITTING

Note, one or more warnings are present in this procedure

WARNING

To avoid all risk of damage to the systems, apply the safety and cleanliness instructions and operation recommendations before carrying out any repair:

Vehicle: Precautions for the repair .

Location and specifications (tightening torques, parts always to be replaced, etc.)(see 75A, Front seat frames and mechanisms, Front seat assembly: Exploded view) .

REMOVAL

1. REMOVAL PREPARATION OPERATION

Remove (see 75A, Front seat frames and mechanisms, Front seat assembly: Exploded view) :

- the front seat belt buckle bolt,
- the front seat belt buckle,
- the front seat belt return buckle bolt,
- the front seat belt return buckle,
- the front seat base trim,
- the front seat base casing nuts,
- the front seat base casing,

- the front seat bolts on body,
- the front seat.

2. REMOVAL OPERATION

- Remove (see 75A, Front seat frames and mechanisms, Front seat assembly: Exploded view) :
  - the front seat runner nuts on front seat base frame,
  - the front seat runner nuts on front seatback frame,
  - the control strap of front seat runner,
  - the front seat runner.

REFITTING

1. REFITTING OPERATION

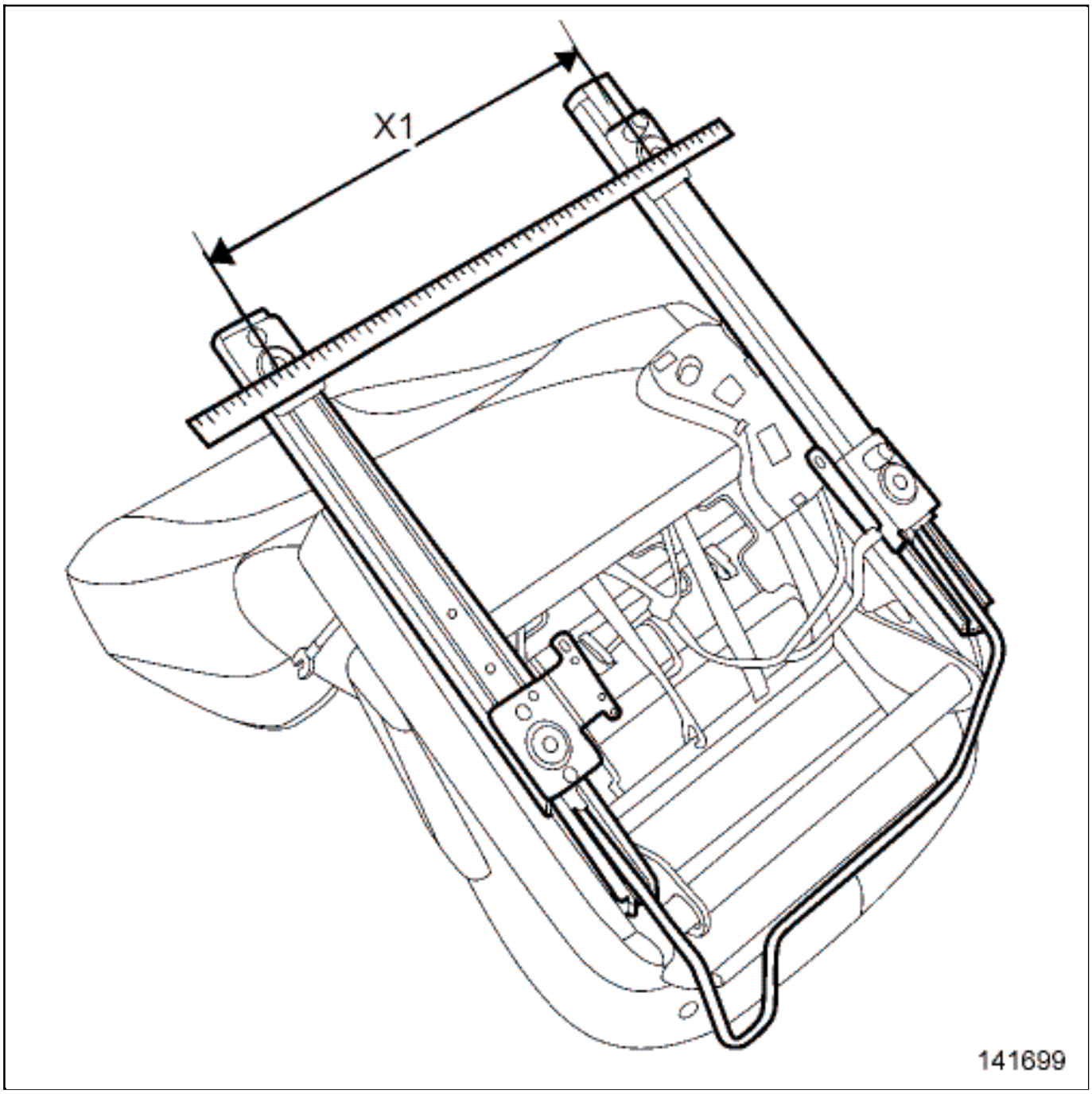

Position the runners so that there is a centre-to-centre distance of 358.5 mm(X1) between the two rear mountings.

Proceed in the reverse order to removal.

XSL version : 3.02 du 22/07/11

FRONT SEATBACK CASING: REMOVAL - REFITTING

Note, one or more warnings are present in this procedure

Special tooling required	
Set of trim removal levers.	Car. 1363

WARNING

To avoid all risk of damage to the systems, apply the safety and cleanliness instructions and operation recommendations before carrying out any repair:

Vehicle: Precautions for the repair .

Location and specifications (tightening torques, parts always to be replaced, etc.)Front seat assembly: Exploded view .

REMOVAL

1. REMOVAL PREPARATION OPERATION

Remove Front seat assembly: Exploded view :

- the front seat belt buckle bolt,
- the front seat belt buckle,
- the front seat belt return buckle bolt,
- the front seat belt return buckle,
- the front seat base trim,

- the front seatback trim,
- the front seat base casing nuts,
- the front seat base casing,
- the front seat bolts on body,
- the front seat.
- the front seat belt inertia reel cover.

Remove the front seatback front casing if some broken clips have been replaced by screws on the front seatback front casingFront seat assembly: Exploded view .

2. REMOVAL OPERATION

Unclip the front seatback rear casingFront seat assembly: Exploded view using the toolSet of trim removal levers. (Car. 1363) .

Remove the front seat belt deflector.

REFITTING

Proceed in the reverse order to removal.

FRONT SEATBACK FRAME: REMOVAL - REFITTING

Note, one or more warnings are present in this procedure

Special tooling required	
Set of trim removal levers.	Car. 1363

WARNING

- To avoid all risk of damage to the systems, apply the safety and cleanliness instructions and operation recommendations before carrying out any repair:
  - Vehicle: Precautions for the repair

Location and specifications (tightening torques, parts always to be replaced, etc.)(see 75A, Front seat frames and mechanisms, Front seat assembly: Exploded view) .

REMOVAL

1. REMOVAL PREPARATION OPERATION

- Remove (see 75A, Front seat frames and mechanisms, Front seat assembly: Exploded view) :
  - the front seat belt buckle bolt,
  - the front seat belt buckle,
  - the front seat belt return buckle bolt,
  - the front seat belt return buckle,
  - the front seat base trim,
  - the front seatback trim.
  - the front seat base casing nuts,
  - the front seat base casing,
  - the front seat bolts on body,
  - the front seat.

2. REMOVAL OPERATION

❑

Drill the front seatback casing rivets on front seatframe(see 75A, Front seat frames and mechanisms, Front seat assembly: Exploded view) .

❑

Unclip the front seatback front casing using the toolSet of trim removal levers.(Car. 1363) (see 75A, Front seat frames and mechanisms, Front seat assembly: Exploded view) .

❑

Remove the front seatback front casing(see 75A, Front seat frames and mechanisms, Front seat assembly: Exploded view) .

1- IN THE EVENT OF REPLACEMENT

❑

Unclip the front seat headrest trim(see 75A, Front seat frames and mechanisms, Front seat assembly: Exploded view) .

REFITTING

1. REFITTING OPERATION

❑

Refit the front seatback front casing on the front seatback frame.

❑

Clip the front seatback front casing.

❑

Refit new rivets.

❑

Check the clips are secure.

❑

If the clips are not secure:

■

use after sales screws(see 75A, Front seat frames and mechanisms, Front seat assembly: Exploded view) .

2. FINAL OPERATION

Proceed in the reverse order to removal.

Repair-70x08x02x08-01x37-1-18-1.xml

XSL version : 3.02 du 22/07/11

FRONT SEATBACK TRIM: REMOVAL - REFITTING

Note, one or more warnings are present in this procedure

Special tooling required	
Set of trim removal levers.	Car. 1363

WARNING

To avoid all risk of damage to the systems, apply the safety and cleanliness instructions and operation recommendations before carrying out any repair:

Vehicle: Precautions for the repair .

Location and specifications (tightening torques, parts always to be replaced, etc.)Front seat assembly: Exploded view .

REMOVAL

1. REMOVAL OPERATION

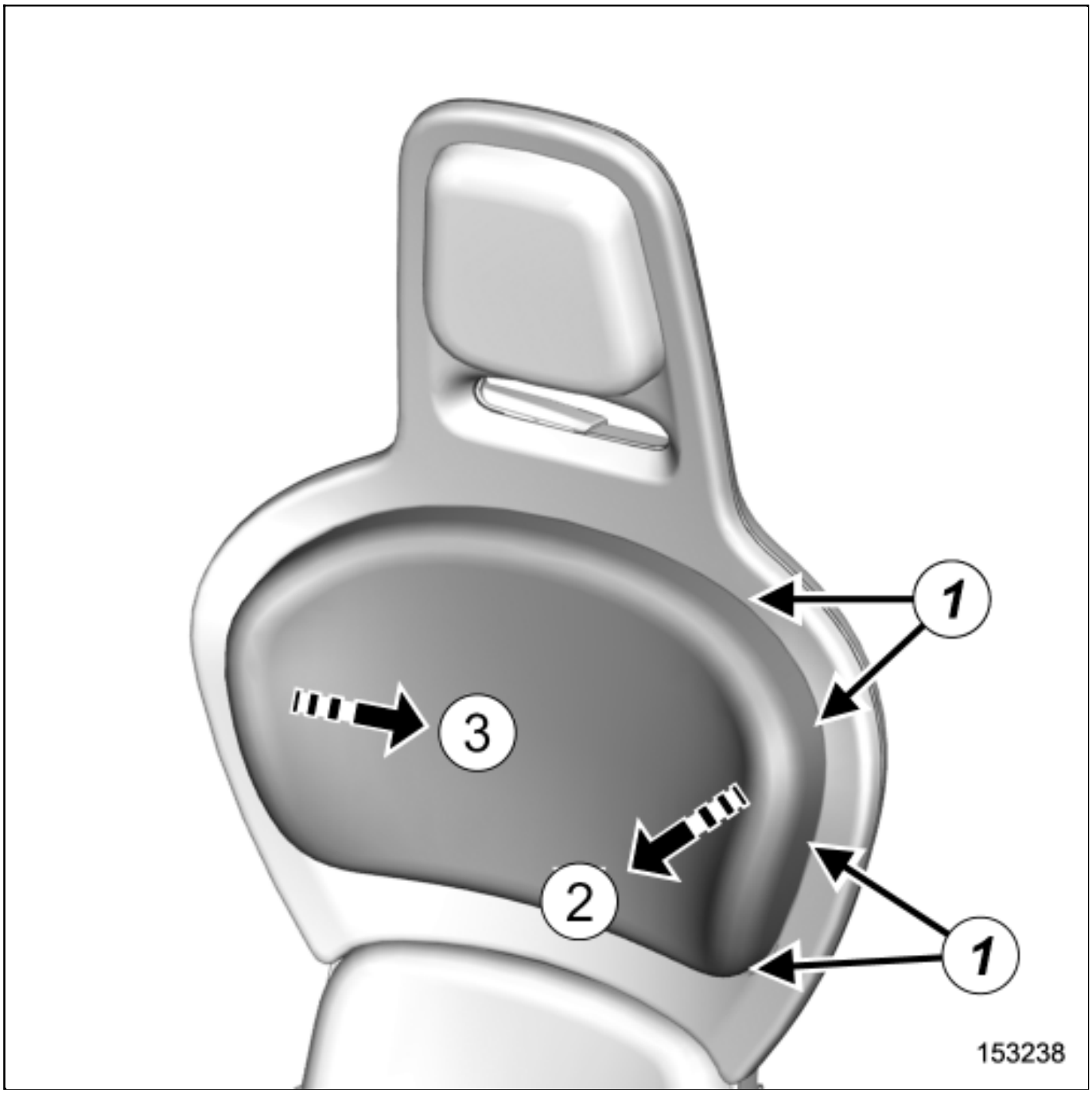
1
3
2
1
153238

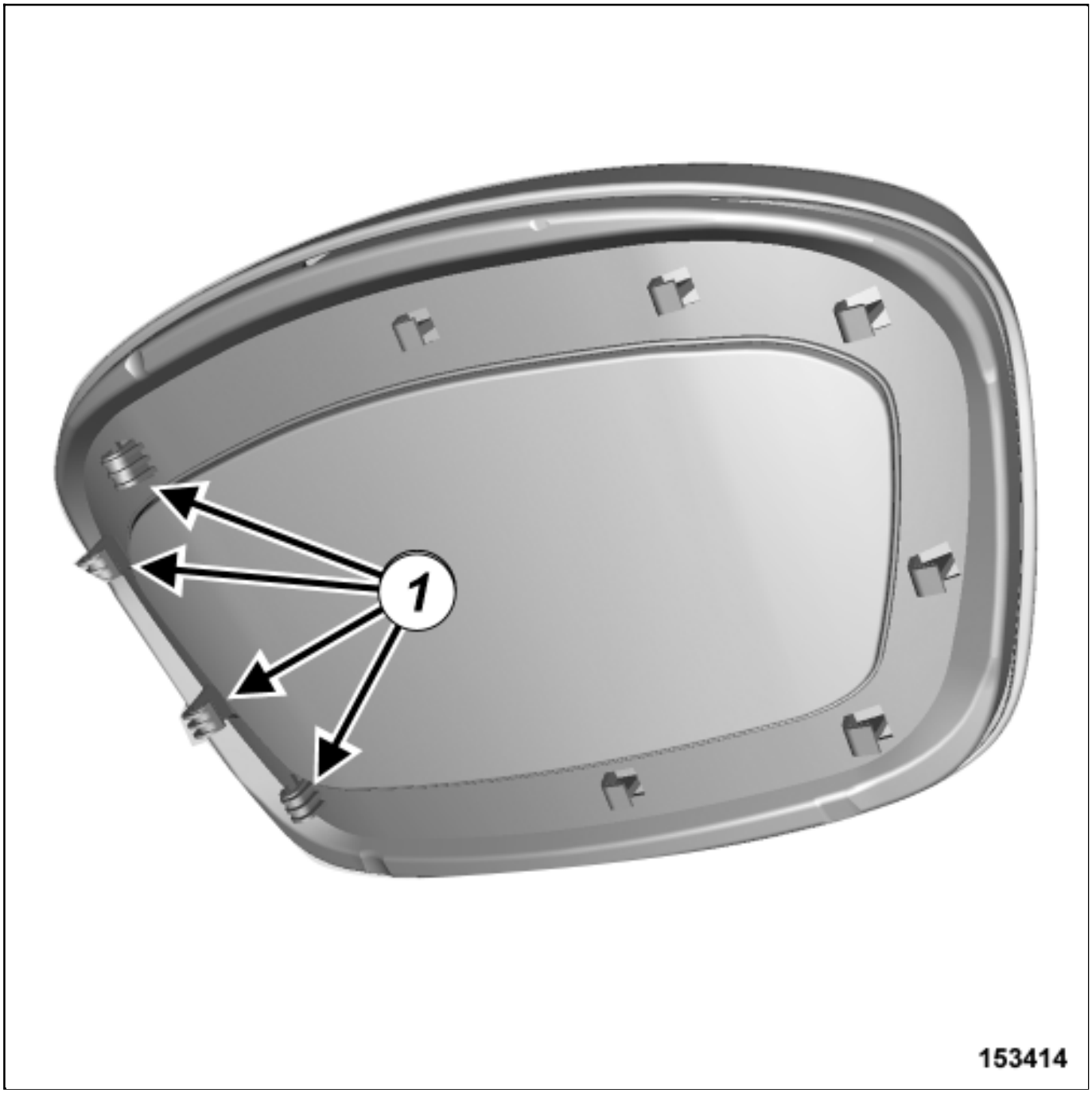

- Unclip (2) the front seatback trim clips(1) using the toolSet of trim removal levers.(Car. 1363) .

- Remove the front seatback trim by sliding it in the direction of the arrow(3) .

REFITTING

-

Proceed in the reverse order to removal.

Repair-70x10x02x06-01x37-1-39-1.xml

XSL version : 3.02 du 22/07/11

FRONT SHOCK ABSORBER AND SPRING: REMOVAL - REFITTING

Note, one or more warnings are present in this procedure

Location and specifications (tightening torques, parts always replaced, etc.)(see 31A, Front axle components, Front axle assembly: Exploded view) .

WARNING

To avoid all risk of damage to the systems, apply the safety and cleanliness instructions and operation recommendations before carrying out any repair:

- (see 31A, Front axle components, Front axle components: Precautions for the repair) ,
- Vehicle: Precautions for the repair .

CAUTION

In order not to damage the brake hose:

- do not tension the hose,
- do not twist the hose,
- check that there is no contact with the surrounding components.

Note:

The shock absorber is not available as a retail replacement part. It is necessary to replace the spring and shock absorber assembly.

REMOVAL

1. REMOVAL PREPARATION OPERATION

- Position the vehicle on a two-post lift Vehicle: Towing and lifting .
- Remove the door mirrors Door mirror: Removal - Refitting .
- Remove the front bumper upper strip Exterior body front trim assembly: Exploded view .
- Remove:
  - the front wheels Wheel: Removal - Refitting ,
  - the A-pillar trims Exterior body side trim assembly: Exploded view ,
  - the front bumper lower trim Exterior body front trim assembly: Exploded view ,
  - the front bumper trim Exterior body front trim assembly: Exploded view ,
  - the bolts of the front brake calliper assembly (see 31A, Front axle components, Front brake calliper assembly: Exploded view) .
- Attach the front brake calliper to the body.
- Remove the steering ball joint nut (see 31A, Front axle components, Front axle assembly: Exploded view) .

❑

Separate the steering ball joint from the front hub carrier Ball-joint uncoupling tool : Use .

❑

Remove the lower arm ball joint nut (see 31A, Front axle components, Front axle assembly: Exploded view) .

❑

Separate the lower arm ball joint from the front hub carrier Ball-joint uncoupling tool : Use .

❑

Remove (see 31A, Front axle components, Front axle assembly: Exploded view) :

- the shock absorber nut on filter unit,
- the shock absorber washer on filter unit,
- the spring upper damper,
- the "hub carrier - shock absorber" assembly.

2. REMOVAL OPERATION

❑

Remove (see 31A, Front axle components, Front axle assembly: Exploded view) :

- the spring lower damper,
- the shock absorber base bolt,
- the shock absorber.

REFITTING

❑

Proceed in the reverse order to removal.

XSL version : 3.02 du 22/07/11

FRONT SHOCK ABSORBER AND SPRING: REMOVAL - REFITTING

Note, one or more warnings are present in this procedure

Location and specifications (tightening torques, parts always replaced, etc.)(see 31A, Front axle components, Front axle assembly: Exploded view) .

WARNING

To avoid all risk of damage to the systems, apply the safety and cleanliness instructions and operation recommendations before carrying out any repair:

- (see 31A, Front axle components, Front axle components: Precautions for the repair) ,
- Vehicle: Precautions for the repair .

CAUTION

In order not to damage the brake hose:

- do not tension the hose,
- do not twist the hose,
- check that there is no contact with the surrounding components.

Note:

The shock absorber is not available as a retail replacement part. It is necessary to replace the spring and shock absorber assembly.

REMOVAL

1. REMOVAL PREPARATION OPERATION

- Position the vehicle on a two-post lift Vehicle: Towing and lifting .

- Remove the front bumper upper strip Exterior body front trim assembly: Exploded view .

- Remove:
  - the front wheels Wheel: Removal - Refitting ,
  - the A-pillar trims Exterior body side trim assembly: Exploded view ,
  - the front bumper lower trim Exterior body front trim assembly: Exploded view ,
  - the front bumper trim Exterior body front trim assembly: Exploded view ,
  - the bolts of the front brake calliper assembly (see 31A, Front axle components, Front brake calliper assembly: Exploded view) .

- Attach the front brake calliper to the body.

- Remove the steering ball joint nut (see 31A, Front axle components, Front axle assembly: Exploded view) .

- Separate the steering ball joint from the front hub carrier Ball-joint uncoupling tool : Use .

Remove the lower arm ball joint nut(see 31A, Front axle components, Front axle assembly: Exploded view) .

Separate the lower arm ball joint from the front hub carrierBall-joint uncoupling tool : Use .

Remove (see 31A, Front axle components, Front axle assembly: Exploded view) :

- the shock absorber nut on filter unit,
- the shock absorber washer on filter unit,
- the spring upper damper,
- the "hub carrier - shock absorber" assembly.

2. REMOVAL OPERATION

Remove (see 31A, Front axle components, Front axle assembly: Exploded view) :

- the spring lower damper,
- the shock absorber base bolt,
- the shock absorber.

REFITTING

Proceed in the reverse order to removal.

FRONTSIDEMEMBER:REPLACEMENT

Note, one or more warnings are present in this procedure

WARNING

DANGER: HIGH VOLTAGE VEHICLE.

Risks of serious burns or electric shock that may prove fatal.

Before carrying out any work on the vehicle, it is essential that you adhere to the instructions regarding vehicle voltage cut-off. This work must be carried out by an employee who is qualified and authorized to work on a high-voltage onboard network Vehicle: Precautions for the repair .

Lockout the vehicleVehicle: Lockout - Removal of lockout .

1. COMPOSITION OF THE SPARE PART

1- PART TO BE SYSTEMATICALLY REPLACED

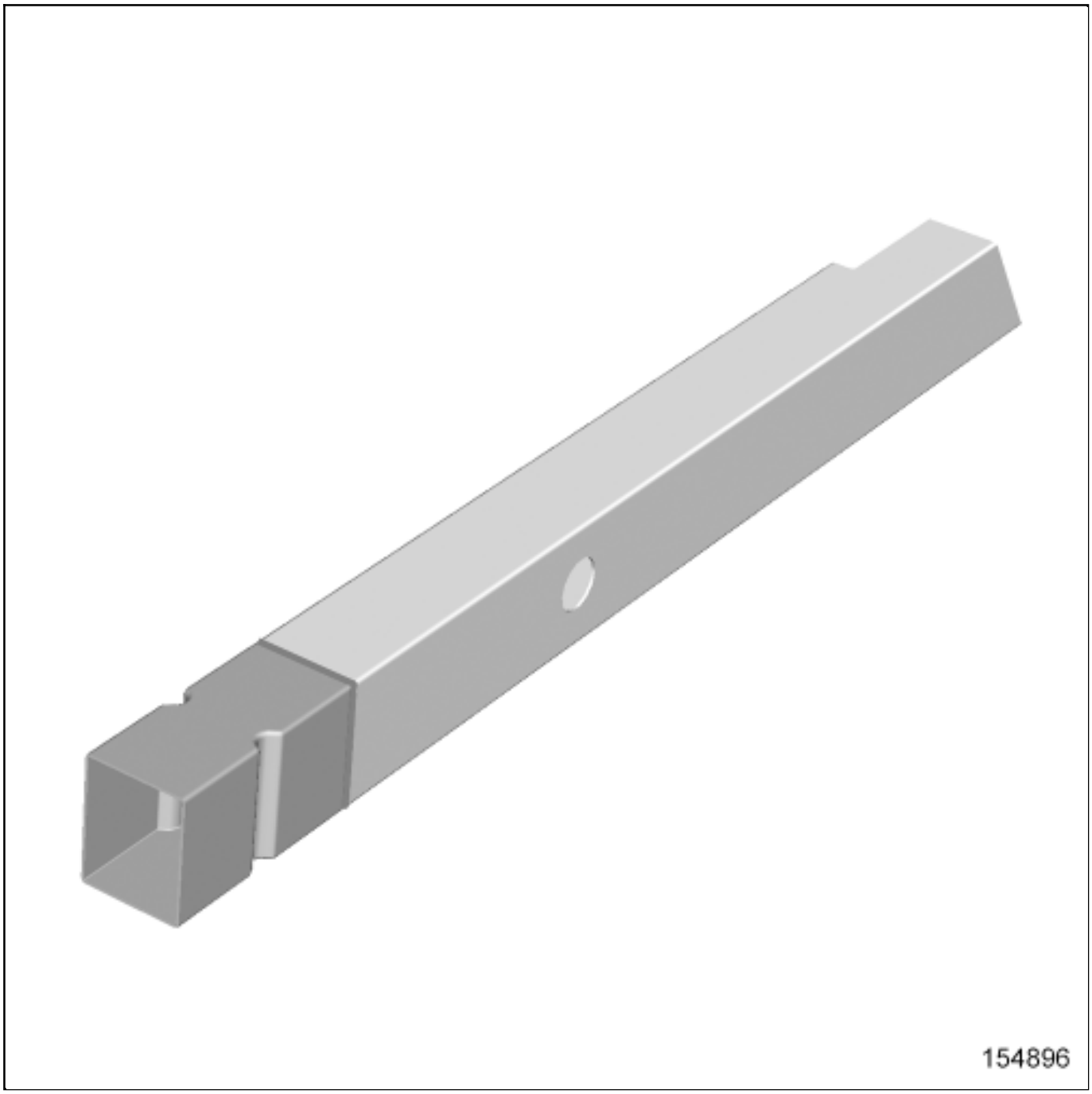

Note:

The Parts Department only supplies complete front side member following the picture.

Some adaptations are to be performed for partial replacement.

2- PART ADAPTATIONS

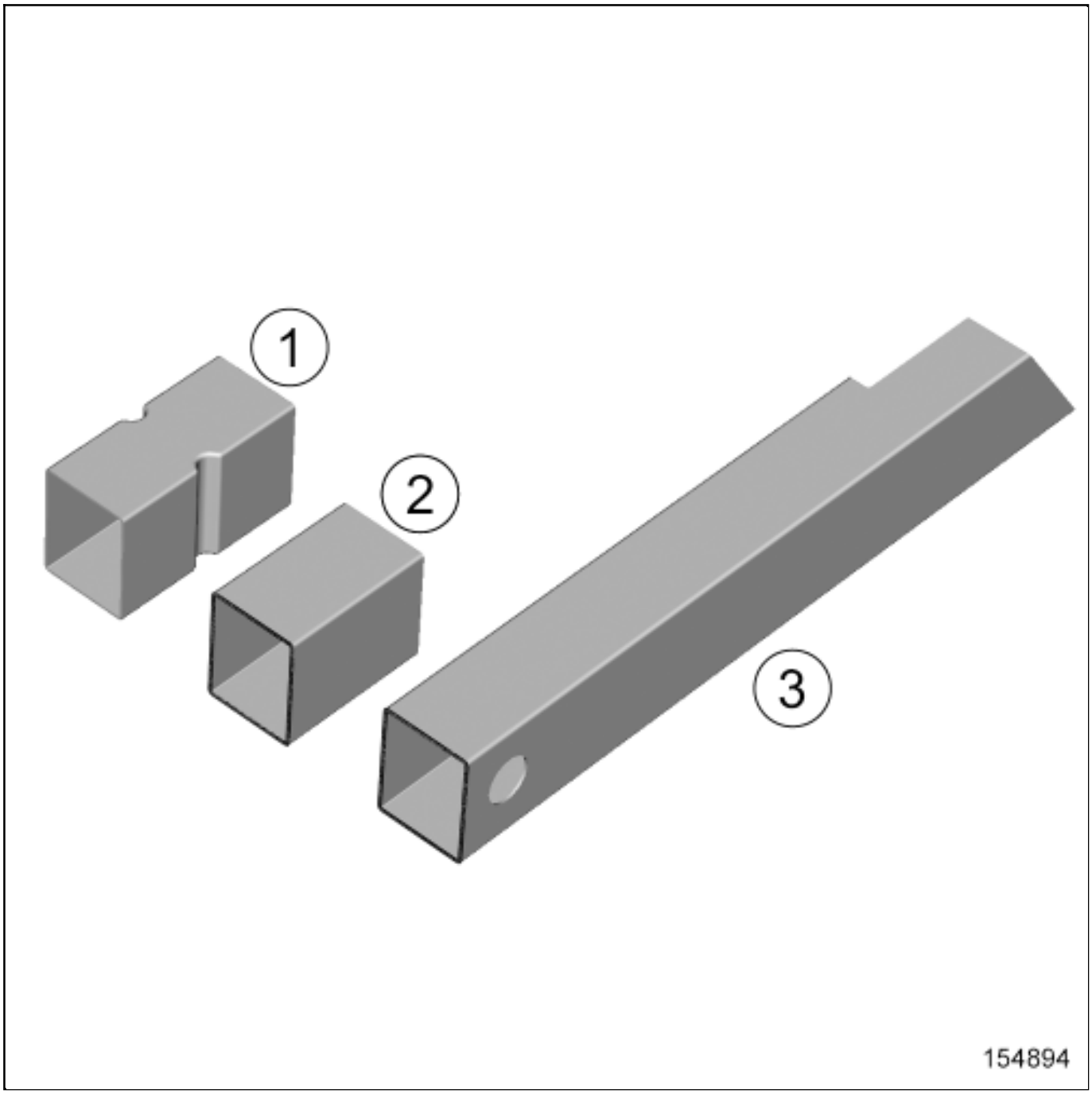

No.	Description	Type	Thickness (mm)
(1)	Front side member end piece	HLE	1.5
(2)	Side member reinforcement	HLE	1.5
(3)	Front right-hand side member	HLE	1.5

2. IN THE EVENT OF REPLACEMENT

The option for replacing this part is as follows:

- front partial replacement A-B,

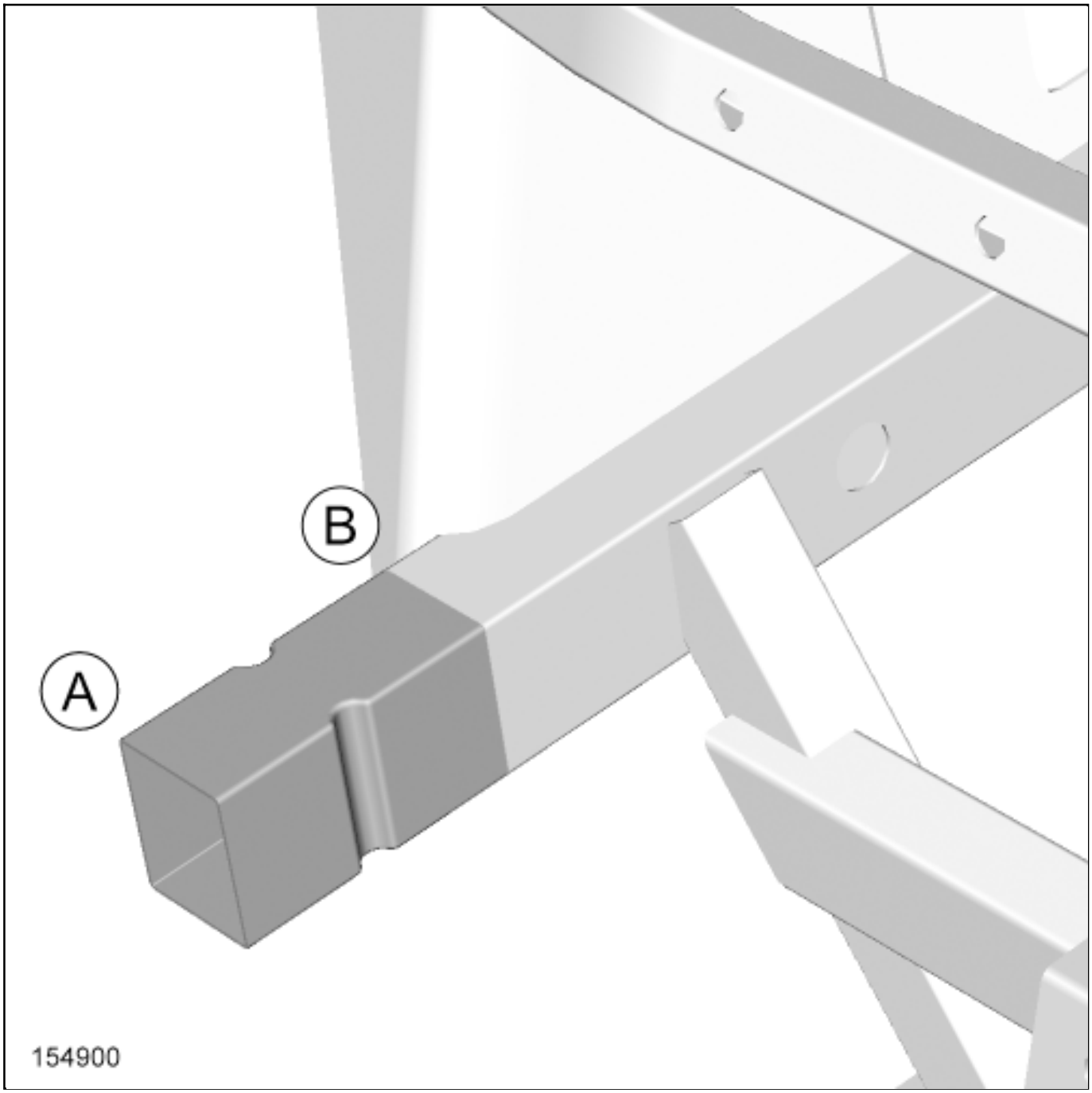

1- FRONT SIDE PARTIAL REPLACEMENT A-B

1)PART IN POSITION

SIDE MEMBER CUTTING ON VEHICLE

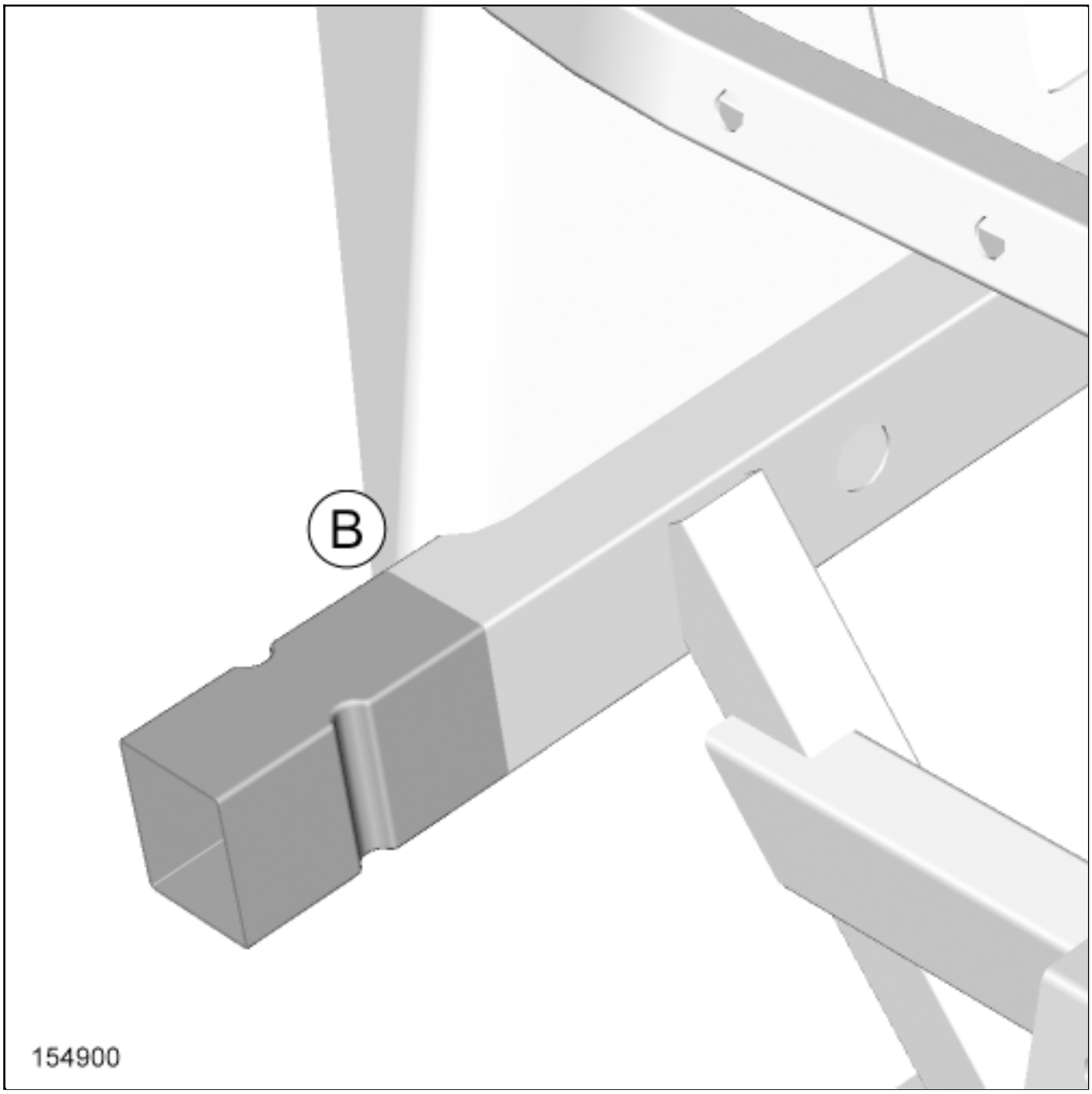

DETAILED VIEW OF CUT B

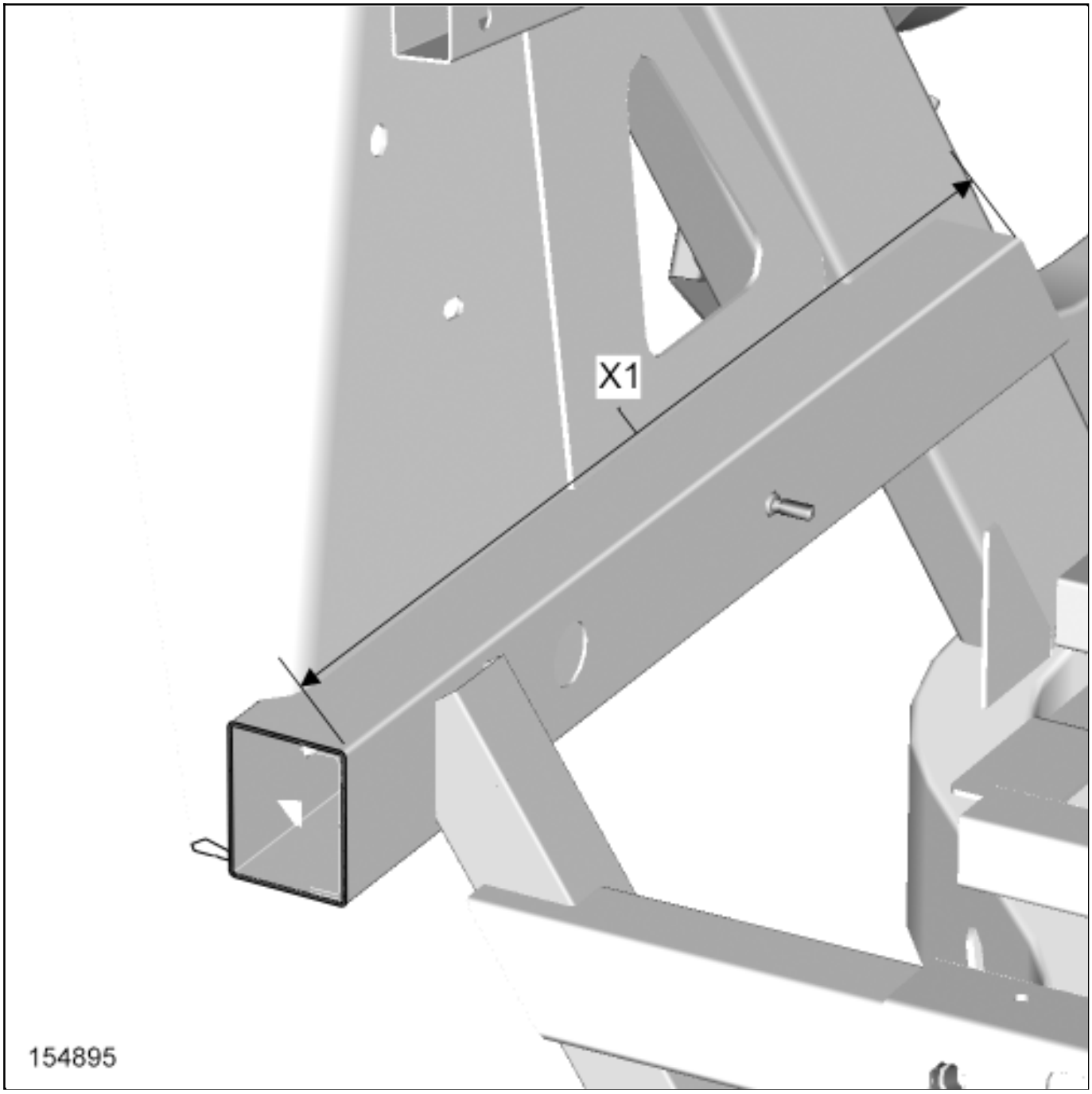

(X1) 422.90 mm

END PIECE CUTTING ON NEW PART

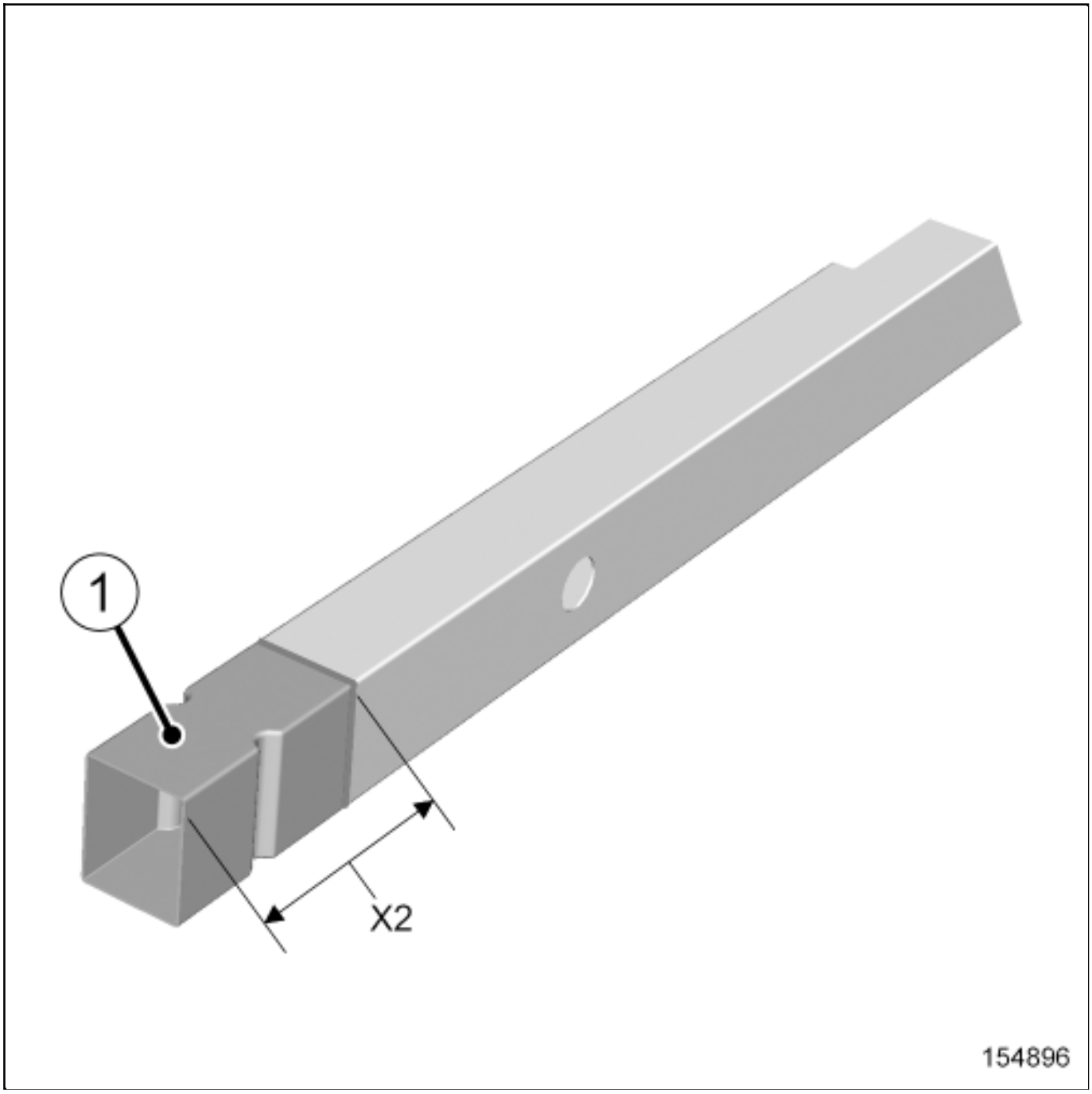

(X2) 90 mm

SIDE MEMBER REINFORCEMENT CUTTING ON NEW PART

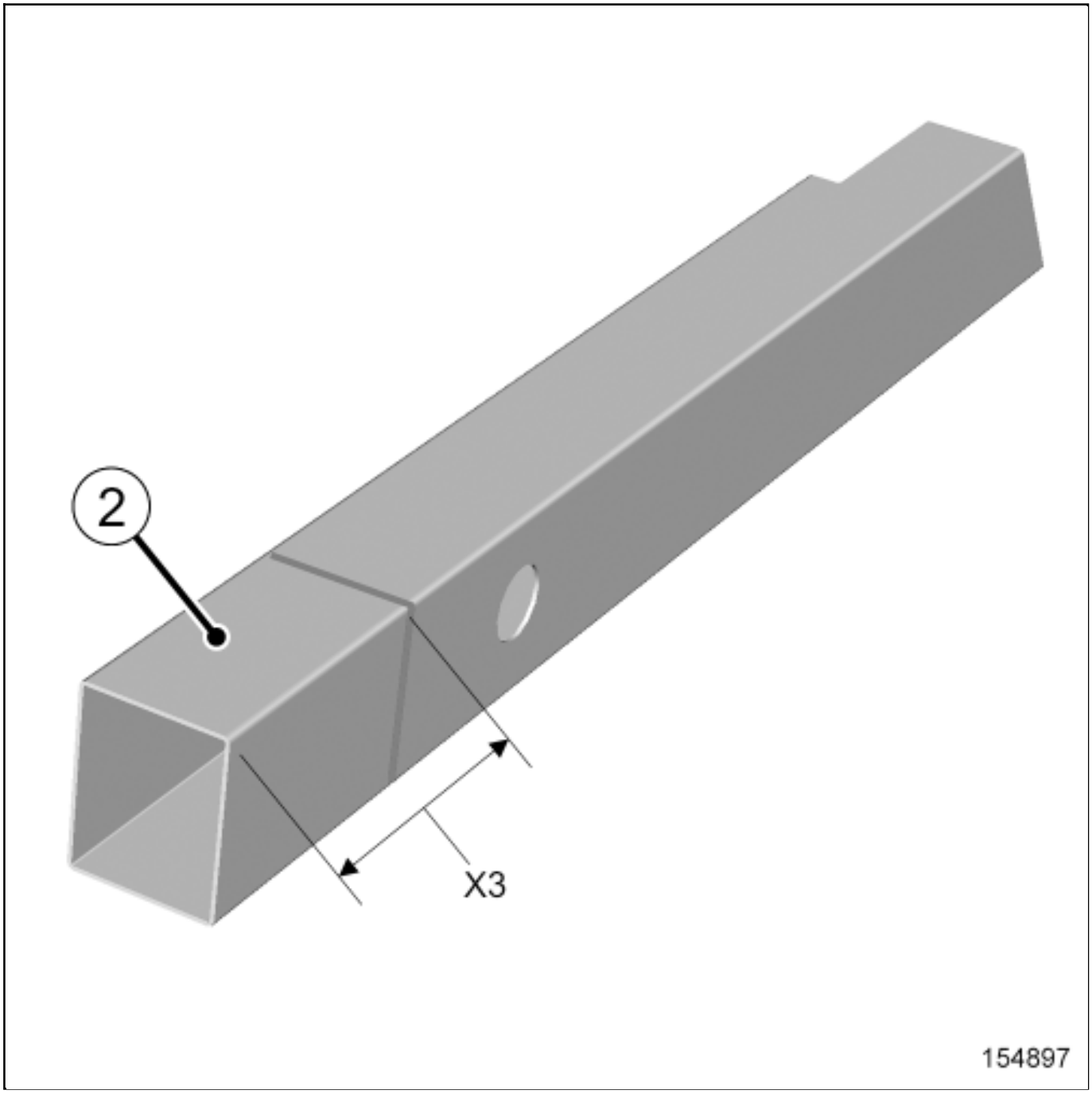

(X3) 80 mm

SIDE MEMBER REINFORCEMENT CUTTING FOR ASSEMBLY

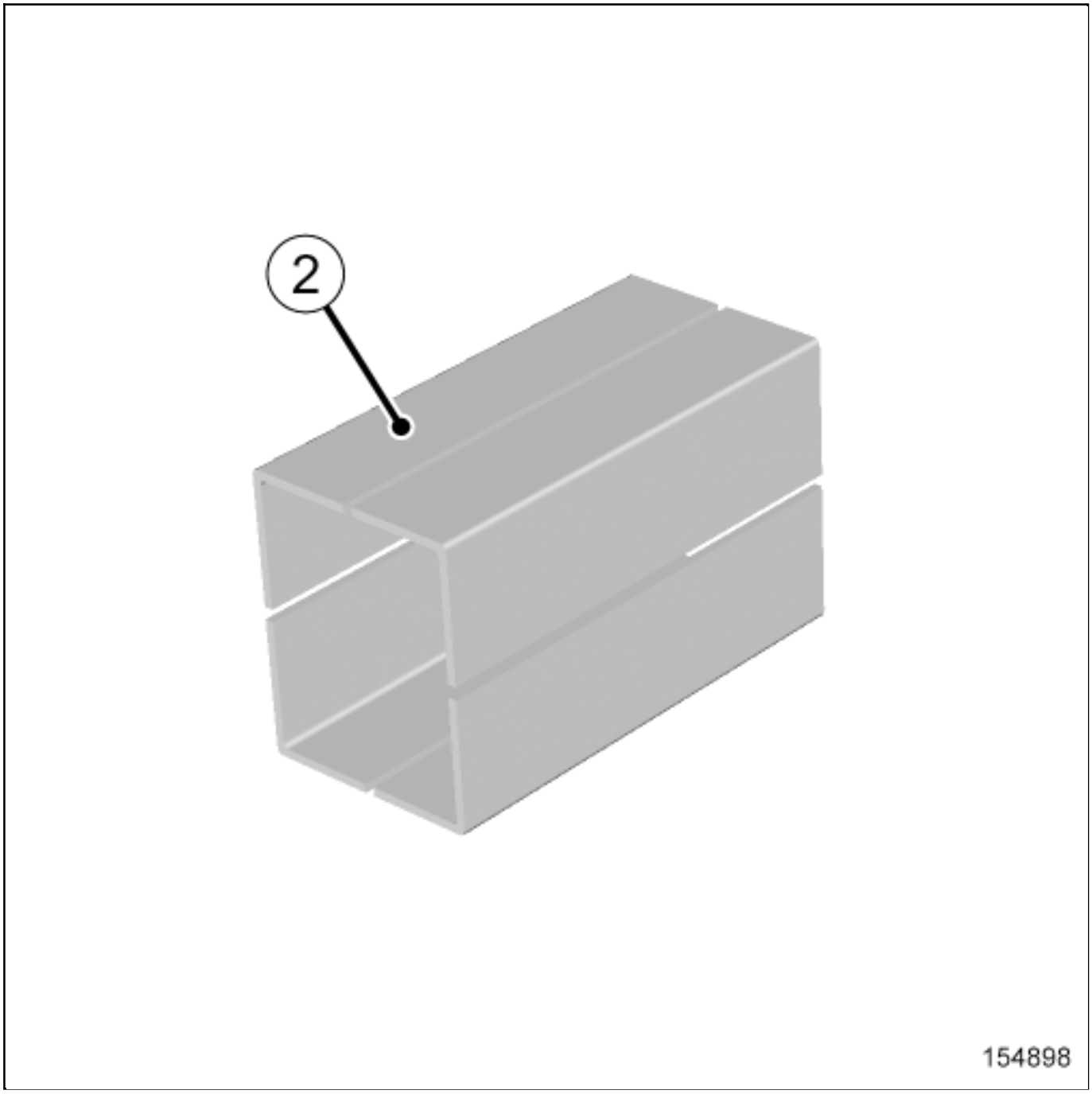

NEW PARTS ASSEMBLY ON VEHICLE

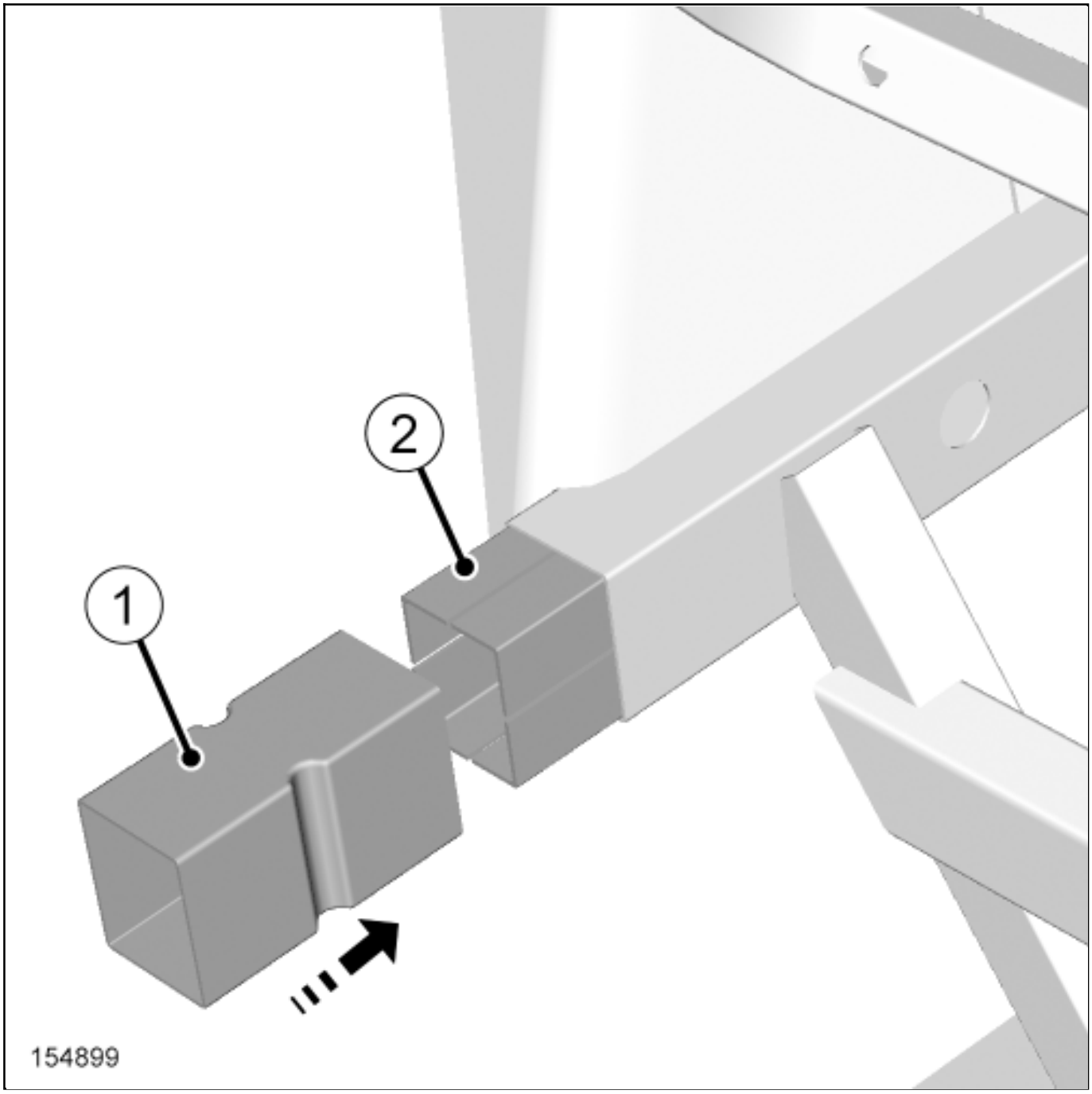

Complete assembly: front side member end piece(1) and side member reinforcement(2) .

PARTS IN POSITION

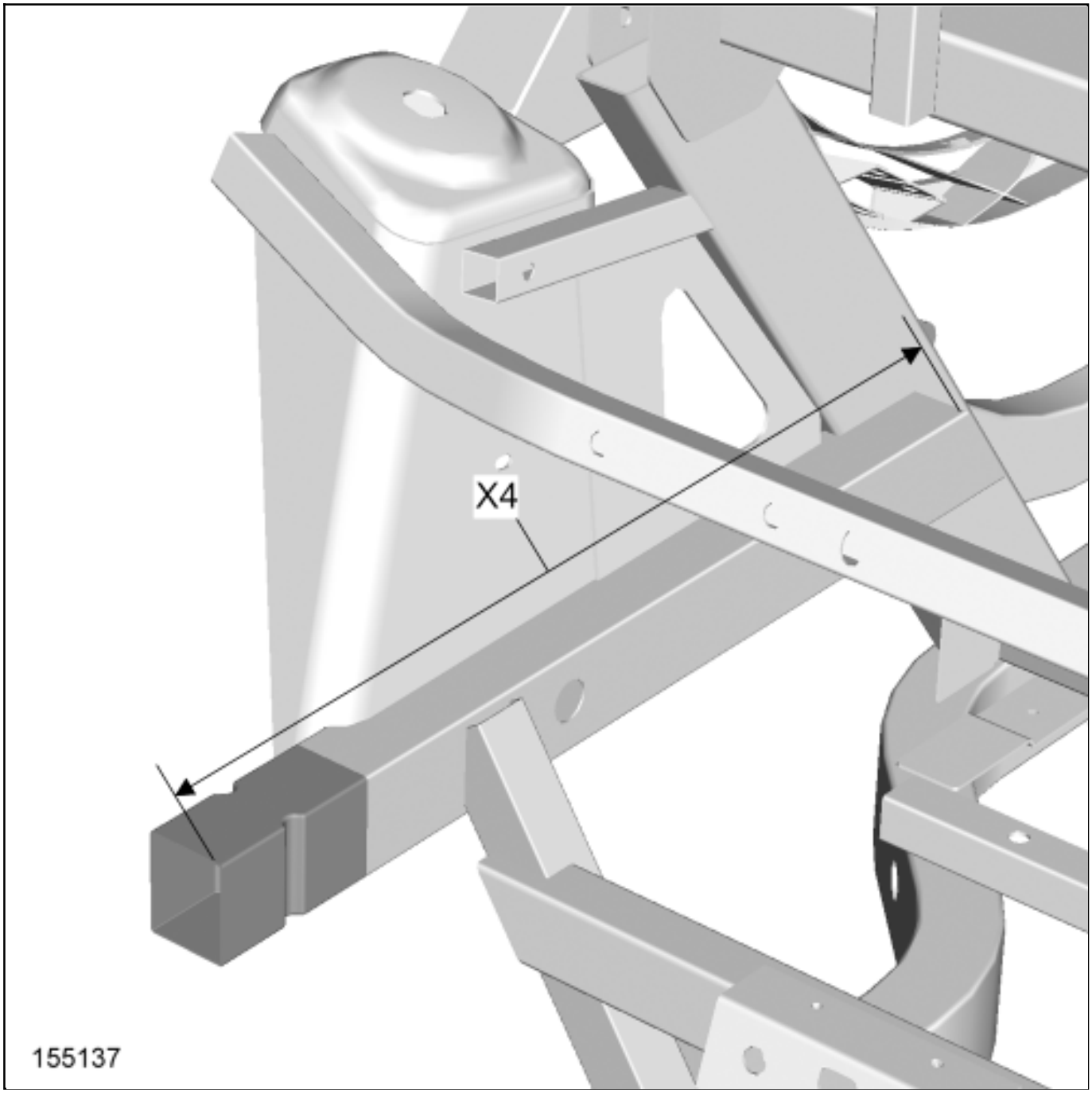

(X4) 512.85 mm

2)POSITION OF ELECTRIC EARTHS

CAUTION

To avoid damaging the vehicles electric and electronic components, the earths of any wiring harness near the weld area must be disconnected.

Position the earth of the welding machine as close as possible to the weld area(see **Bolted connection for earth: Fitting**) (MR 400, 40H, Bolted connections).

Locate the earths located near to the weld area**Earths on body: List and location of components** .

3)SPECIAL NOTES ON MATING

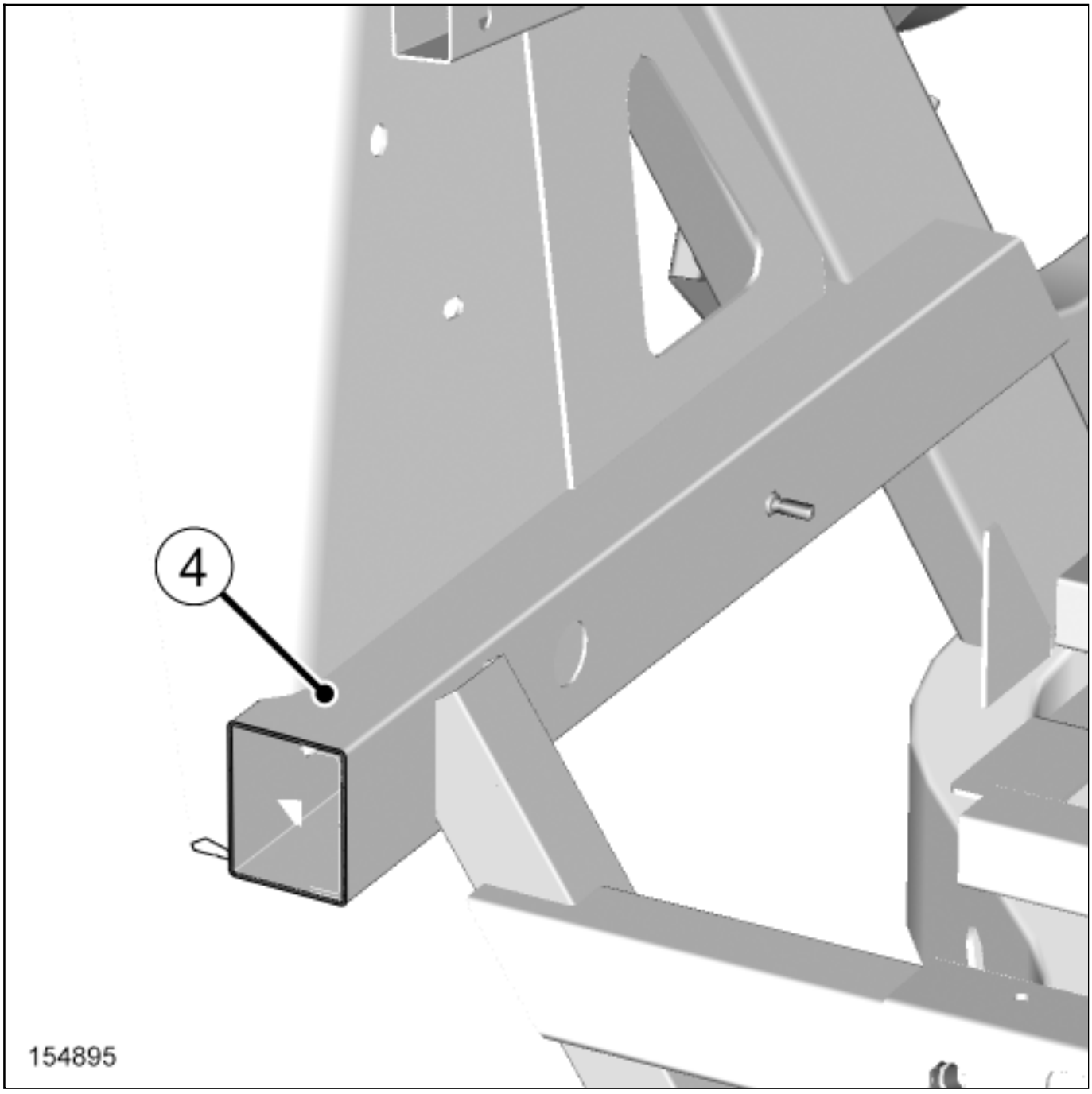

Note:

When cutting, be careful not to damage the rear section of the front side member(4) .

CAUTION

If the mating faces of the parts to be welded are not accessible, use a GMAW plug weld in place of the original electrical resistance weld**Connections by arc welding under shielding gas: Description** .

Repair-40x02x06-02x49-1-2-1.xml

XSL version : 3.02 du 22/07/11

FRONT SIDE OPENING ELEMENT: REMOVAL - REFITTING

REMOVAL

1. REMOVAL PREPARATION OPERATION

- Remove Exterior front side opening element assembly: Exploded view :
  - the door mirror trim,
  - the door mirror,
  - the front side door exterior panel.
- Remove the glovebox Dashboard assembly: Exploded view .
- Remove the front opening element strut Front opening element strut: Removal - Refitting .

2. REMOVAL OPERATION

- Remove: Exterior front side opening element assembly: Exploded view :
  - the front side door bolts on hinge,
  - the front side door (this operation requires two people),
  - the windscreen side window.
- Remove the dashboard side panel.

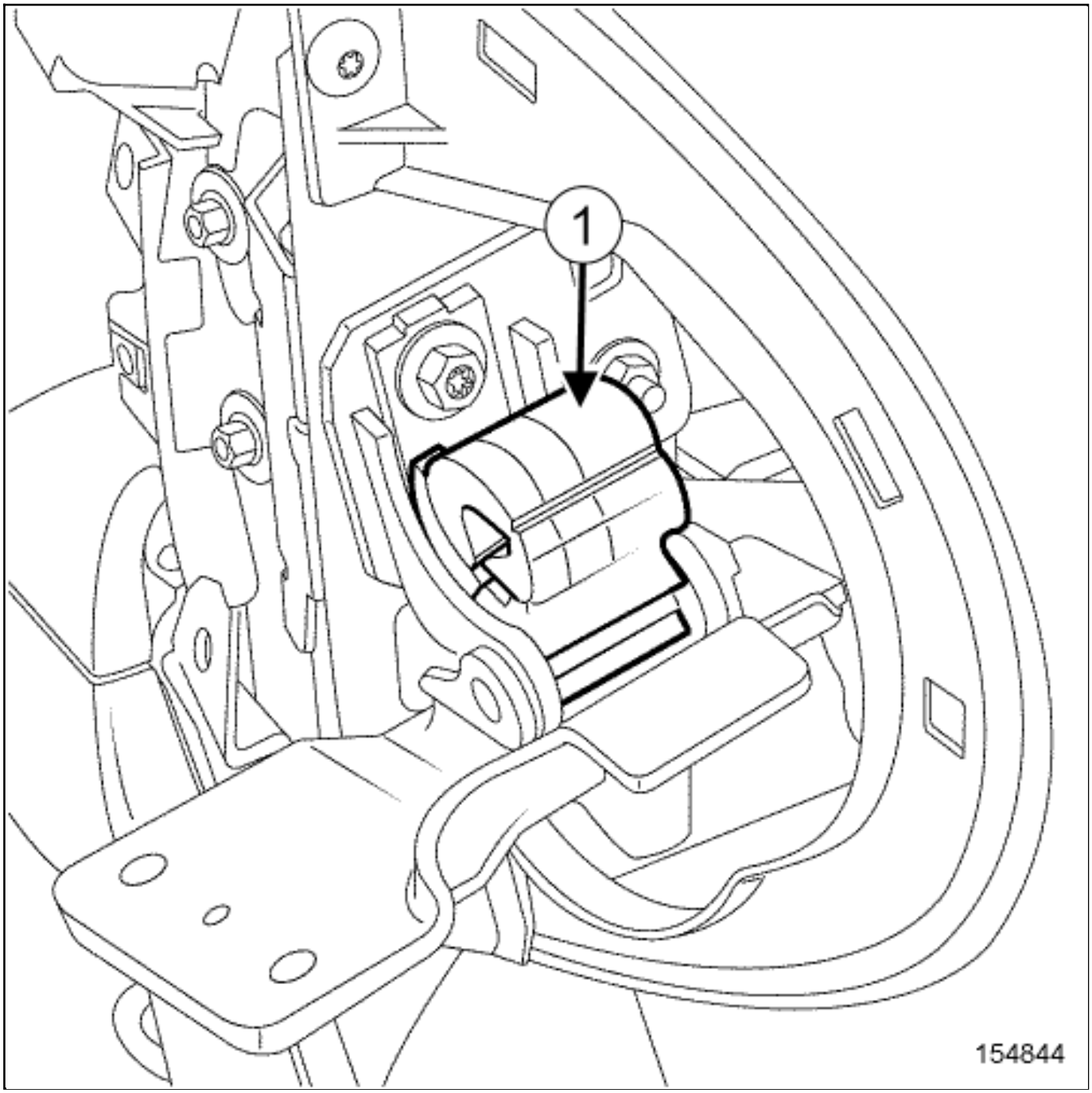

- Remove the front side door hinge rubber stop(1) .

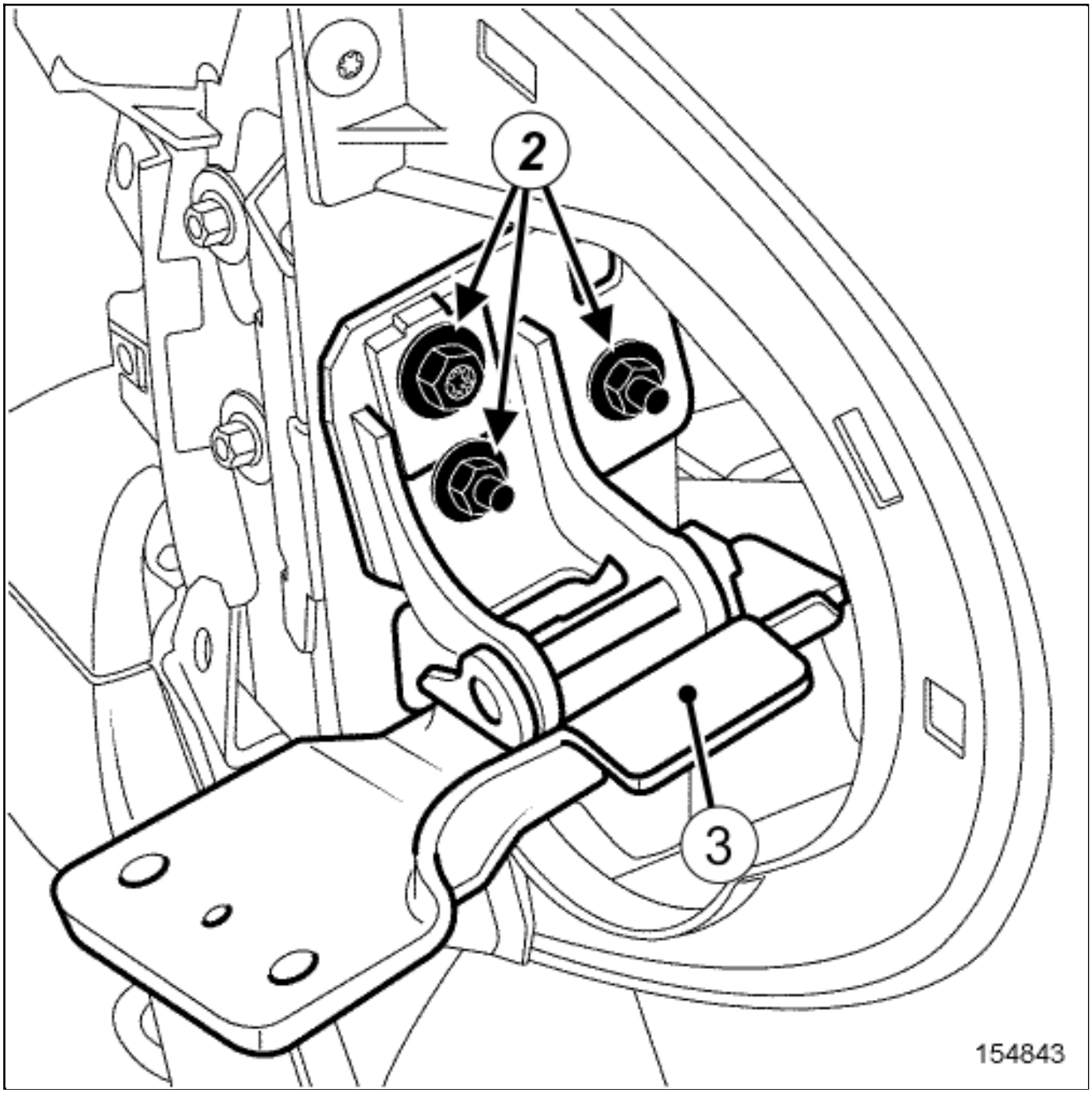

Remove:

- the front side door hinge nuts(2) ,
- the front side door hinge(3) .

REFITTING

1. REFITTING OPERATION

- Refit:
  - the front side door hinge,
  - the front side door hinge nuts.

- Torque tighten the front side door hinge nuts21 N.m.

- Refit:
  - the front side door hinge rubber stop,
  - the dashboard side panel.

- Refit Exterior front side opening element assembly: Exploded view :
  - the windscreen side window,
  - the front side door (this operation requires two people),
  - the front side door bolts on hinge.

- Torque tighten the front side door bolts on hinge62 N.m.

2. FINAL OPERATION

- Proceed in the reverse order to removal.

- Carry out a function test on all functions.

XSL version : 3.02 du 22/07/11

FRONT SIDE SEAT BELT: REMOVAL - REFITTING

Note, one or more warnings are present in this procedure

WARNING

To avoid all risk of damage to the systems, apply the safety and cleanliness instructions and operation recommendations before carrying out any repair:

Vehicle: Precautions for the repair .

Location and specifications (tightening torques, parts always to be replaced, etc.)Front seat assembly: Exploded view .

REMOVAL

1. REMOVAL PREPARATION OPERATION

Position the front seat towards the front.

Remove the front seat belt inertia reel cover Front seat assembly: Exploded view .

2. REMOVAL OPERATION

Remove Front seat assembly: Exploded view :

- the front seat belt inertia reel bolt,
- the front seat belt buckle bolt cover,

- the front seat belt buckle bolt,
- the front side seat belt.

REFITTING

Proceed in the reverse order to removal.

Repair-31x02x01x23-01x37-1-18-1.xml

XSL version : 3.02 du 22/07/11

FRONT SIGNALS - LIGHTING ASSEMBLY: EXPLODED VIEW

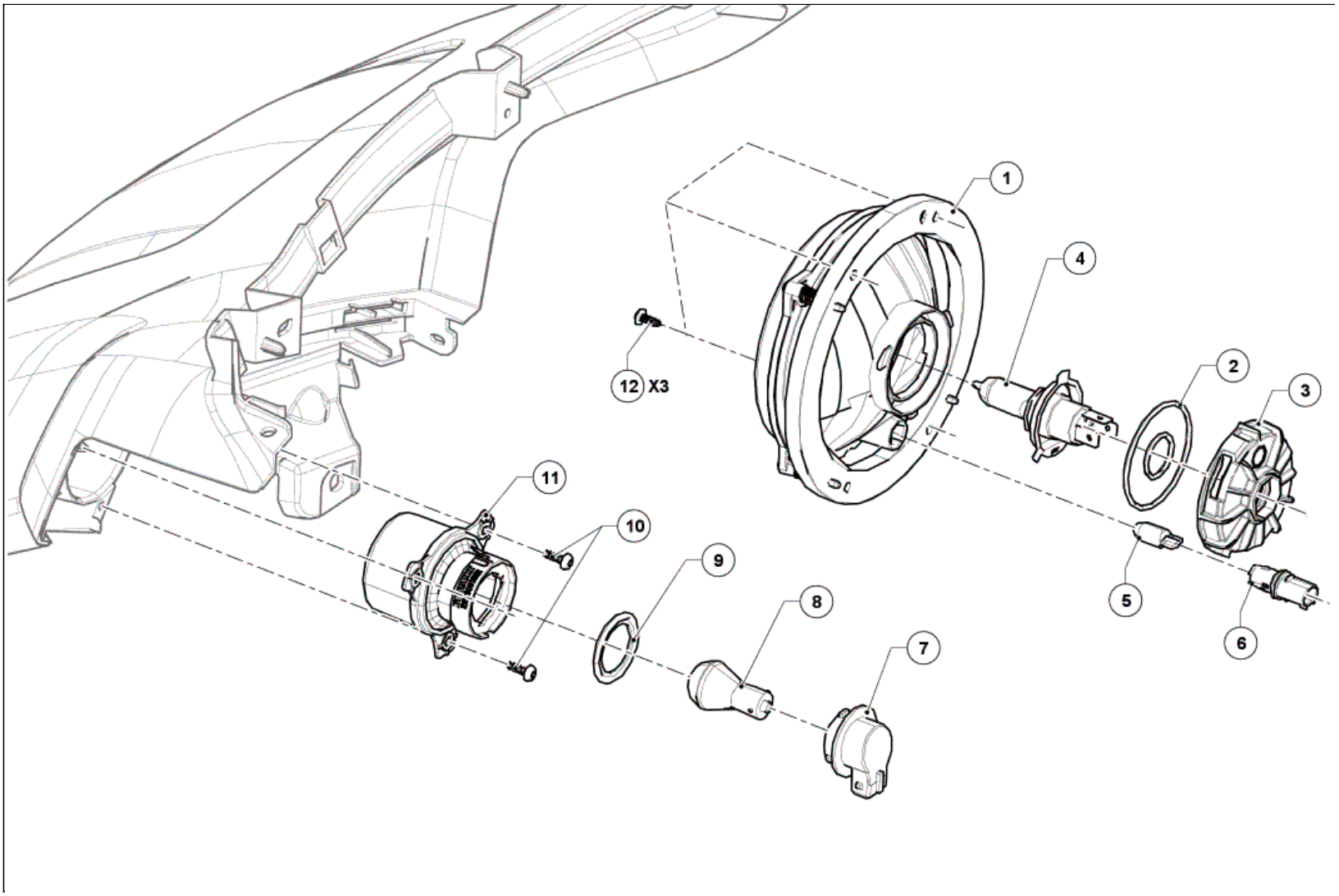

Illustration key: Description .

For fastenings with no specified tightening torque values, refer to the Table of Standard TorquesTightening torques: General information .

Marks	Designations	Informations
1	Headlight	
2	Headlight cover seal	
3	Headlight cover	
4	Headlight bulb	(see 80B, Headlights, Headlight bulb: Removal - Refitting)
5	Side light bulb	(see 80B, Headlights, Headlight bulb: Removal - Refitting)
6	Side light bulb holder	
7	Direction indicator bulb holder	
8	Direction indicator bulb	(see 80B, Headlights, Front direction indicator bulb: Removal - Refitting)
9	Direction indicator bulb holder seal	
10	Direction indicator light screws	
11	Direction indicator light	
12	Headlight screws	

FRONT SPEAKERS: REMOVAL - REFITTING

REMOVAL

1. REMOVAL PREPARATION OPERATION

- Switch off the ignition.
- Remove the roof rear cross member trim Roof trim assembly: Exploded view .

2. REMOVAL OPERATION

- Disconnect the front speaker connector.
- Remove:
  - the front speaker bolts,
  - the front speaker.

REFITTING

- Proceed in the reverse order to removal.

Repair-30x04x06x05-01x37-1-22-1.xml

XSL version : 3.02 du 22/07/11

FRONT UPPER CROSS MEMBER: REPLACEMENT

Note, one or more warnings are present in this procedure

WARNING

DANGER: HIGH VOLTAGE VEHICLE.

Risks of serious burns or electric shock that may prove fatal.

Before carrying out any work on the vehicle, it is essential that you adhere to the instructions regarding vehicle voltage cut-off. This work must be carried out by an employee who is qualified and authorized to work on a high-voltage onboard network Vehicle: Precautions for the repair .

1. COMPOSITION OF THE SPARE PART

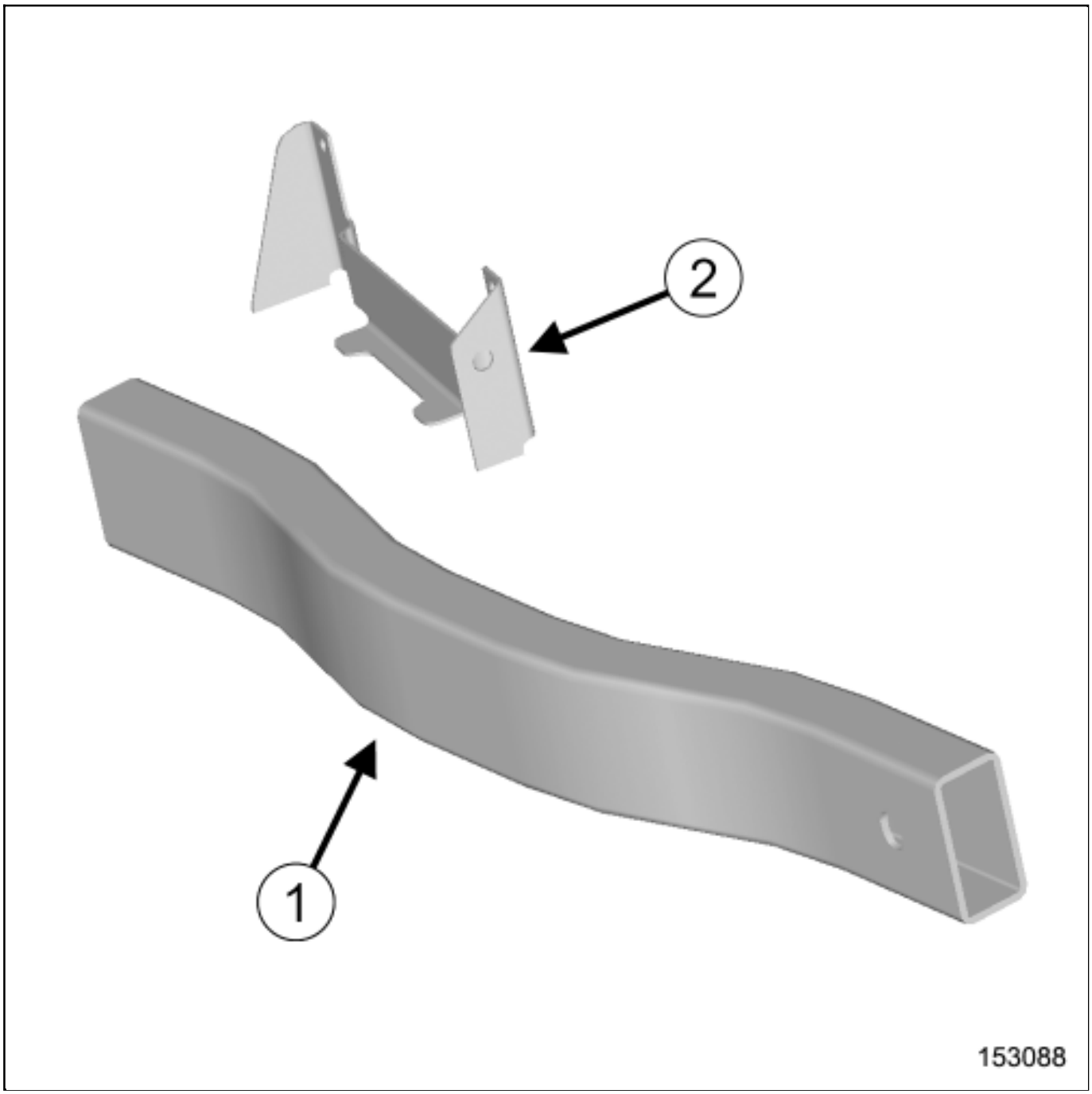

No.	Description	Type	Thickness (mm)
(1)	Front unit front end cross member	TSE	3
(2)	Windscreen washer bottle support	XES	1.5

Note:

The stud will be ordered in addition, it is not included in the replacement part.

2. IN THE EVENT OF REPLACEMENT

The option for replacing the part is as follows:

complete replacement.

CAUTION

If the mating faces of the parts to be welded are not accessible, make EGW plug welds to replace the original resistance welds (see MR 400).

1- POSITION OF ELECTRIC EARTHS

CAUTION

To avoid damaging the vehicles electric and electronic components, the earths of any wiring harness near the weld area must be disconnected.

Position the earth of the welding machine as close as possible to the weld area (see MR 400).

Locate the earths located near to the weld areaEarths on body: List and location of components .

2- COMPLETE REPLACEMENT

Note:

The repair bench does not have to be used, on condition that the side members have not been affected by the impact.

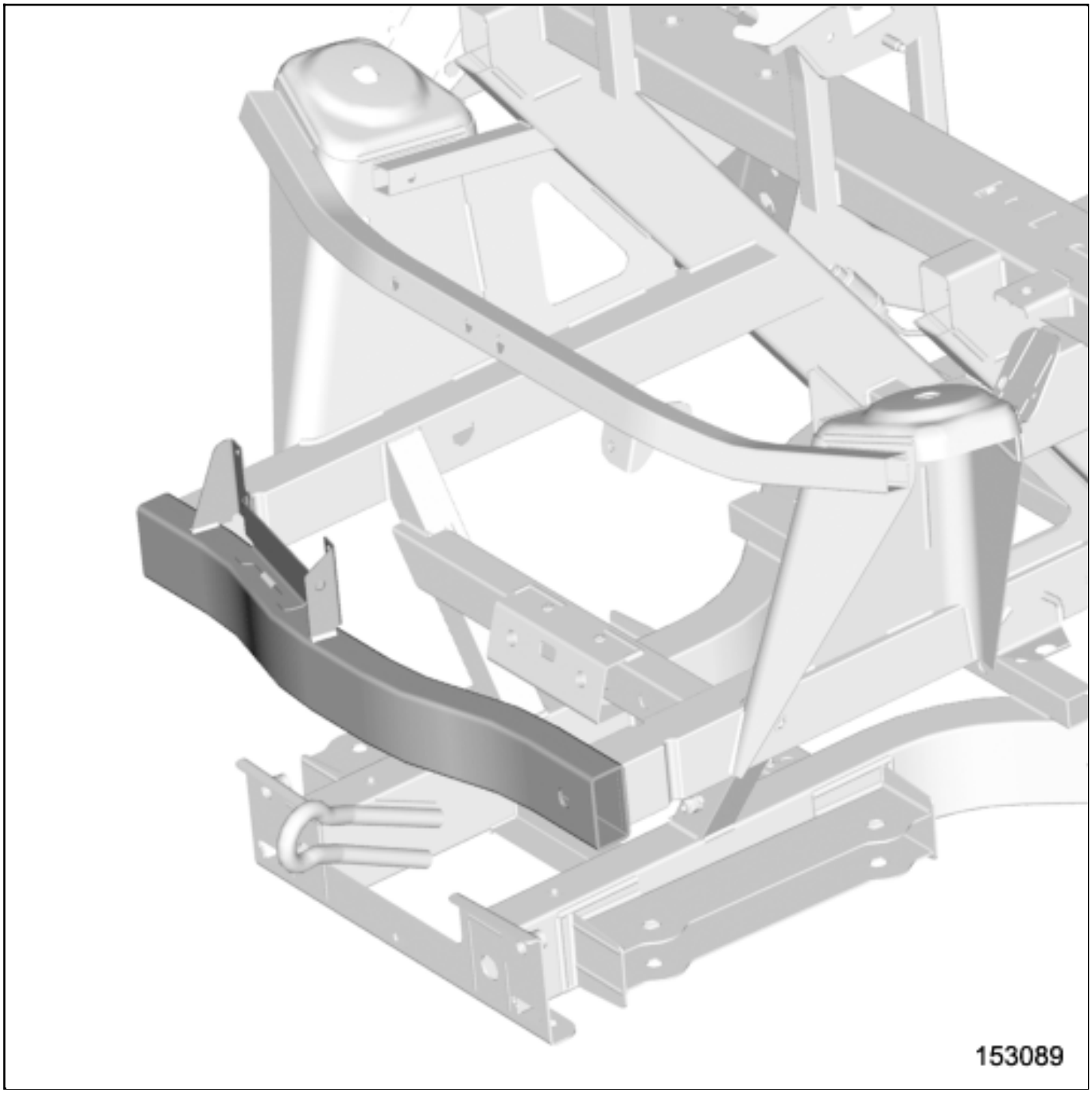
153089

Type	S/Section
XXX X	24A

Electric vehicle

24A INSULATION FAULT FINDING ON ELECTRIC VEHICLES

- Engine: **XXX**
- Gearbox: **XXX**

Basic manual: any Technical Note

This Technical Note concerns the operations to be performed when searching for an electrical insulation fault on a power circuit of an electric vehicle or hybrid electric combustion engine vehicle with a megohmmeter or insulation tester.

"The repair procedures given by the manufacturer in this document are based on the technical specifications current when it was prepared.

The procedures may be modified as a result of changes introduced by the manufacturer in the production of the various component units and accessories from which his vehicles are constructed."

All rights reserved by Renault s.a.s.

Copying or translating, in part or in full, of this document or use of the service part reference numbering system is forbidden without the prior written authority of Renault s.a.s.

© Renault s.a.s. 2013

CONTENTS

CONTENTS 24A-1
1 GENERAL INFORMATION 24A-2
1.1 Warnings 24A-2
1.2 Equipment required 24A-4
2 DEFINITIONS 24A-6
2.1 Insulation tester or megohmmeter 24A-6
2.2 Voltage detector - Voltage absence tester 24A-6
2.3 Multimeter 24A-6
3 BASIC SAFETY RULES 24A-7
4 PRINCIPLES 24A-12
4.1 Cause of fault? 24A-12
4.2 Preventive and corrective maintenance 24A-13
4.3 Measuring principle 24A-13
4.4 Measuring principle of an insulation tester 24A-14
5 SEARCHING FOR A FAULT 24A-16
5.1 Searching with an ohmmeter 24A-16
5.2 Searching for a mutual short circuit with an ohmmeter 24A-17
5.3 Searching with an insulation tester 24A-17
5.4 Searching with a voltmeter 24A-17
5.5 Measuring insulation on a voltage generator 24A-19
6 EQUIPMENT RECOMMENDATION SHEET 24A-22
6.1 Voltage Absence Tester 24A-22
6.1.1 Main functions 24A-22
6.1.2 Main specifications 24A-22
6.2 Multimeter and current clamps 24A-22
6.2.1 Main functions 24A-22
6.2.2 Main specifications 24A-22
6.3 Insulation tester 24A-23
6.3.1 Main functions 24A-23
6.3.2 Main specifications 24A-23
7 USING THE MEGOHMMETER 24A-24
7.1 Prerequisites 24A-24
7.2 Pre-test safety 24A-24
7.3 Measuring 24A-27

1. GENERAL INFORMATION

1.1 Warnings

WARNING
It is prohibited to work alone in the workshop. Another person must be available nearby so that, in the event of a problem, they can help the person in danger.

WARNING
Any operation performed on the high voltage network of a vehicle involves the risk of death by electrocution. An operator is accredited by the company that employs him/her, provided that the mandatory training has been successfully completed and that he/she has the necessary skills.

WARNING
The procedures described below must be performed by a qualified employee authorised to work on a high voltage on-board network.
Operations on the vehicle's high voltage network present a risk of death by electrocution. The operator is trained and authorised by their employer, subject to certain mandatory conditions of skills and training.

WARNING
DANGER: VEHICLE UNDER HIGH VOLTAGE.

Risk of serious burns or electric shocks that may prove fatal.

Before any operation on the vehicle, it is essential that the lockout instructions for the vehicle are followed. This operation must be performed by a qualified employee authorised to work on a high voltage on-board network.

WARNING
Never use a voltage absence tester if the self-test is incorrect. It could give incorrect information which could put you in danger.

WARNING
To prevent damage to the systems, apply the safety and cleanliness instructions and operation recommendations before carrying out any repair operation:

- Technical Note 6037A: "Vehicle mechanical introduction: work procedure for electric vehicles"
- MR xxx: "Vehicle mechanical introduction: precautions for repair"
- MR xxx: "Battery: precautions for repair"
- MR xxx: "Wiring: precautions for repair"
- MR xxx: "Vehicle mechanical introduction: lockout – removal of lockout"

MR xxx: xxx corresponds to the number of the repair manual for the vehicle.

Note:

Remove any personal objects (jewellery, watches etc.).

Note:
Check that the personal and collective protective equipment are in perfect condition.

1.2 Equipment required

This equipment is given as a reminder. To find the part numbers for each particular vehicle, refer to MR xxx: "Vehicle mechanical introduction: lockout – removal of lockout"

Special tooling required		
Ele. 1967, Ele. 2005, …		Safety locking plug for traction battery
Ele. 1980		Traction battery lockout padlock
Ele. 1993		Voltage Absence Tester

Equipment required	
	Face shield
	Safety helmet
	Safety shoes (electric class 00 or 0)

Equipment required	
	Protective overalls (mainly cotton)
	Boundary limit kit (posts, red and white chains, A4 sign)
	Electronic diagnostic tool
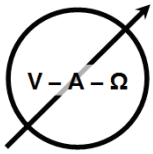	Multimeter that meets RENAULT approved specifications (refer to the "garage equipment" catalogue)
	Megohmmeter that meets RENAULT approved specifications (refer to the "garage equipment" catalogue)
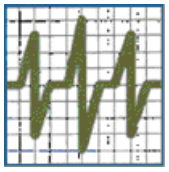	The relevant FAULT FINDING REPAIR MANUAL for the vehicle and the system
	Connection to RENAULT.NET with access to the wiring diagrams for the vehicle being diagnosed

2. DEFINITIONS

2.1 Insulation tester or megohmmeter

Device used to measure very high electrical resistances, such as insulation resistance, expressed in megaohms. It also is called a "megohmmeter".
The insulation tester generates a high direct current voltage (from several hundred volts to several **kV**). The device generally limits the current to a few **mA**.
This device is used to measure the insulation of electrical equipment such as an electric machine, power cables, insulators and lightning arrestors, as well as any equipment or installation likely to present a danger to safety in the event of a fault.

2.2 Voltage detector – Voltage absence tester

This is a specific device designed to check that there is no nominal voltage on an electrical circuit.
The common terms "voltage absence tester", "voltage absence testing device" or "voltage absence controller" are applicable to "voltage detectors" that perform only this function, as defined in the standards in force. The term "voltage detector" has a wider meaning because it includes the "absence" and the "presence" of voltage.
Refer to Technical Note 6037: "Mechanical introduction: personal protective equipment for electric vehicles - **V** - VOLTAGE DETECTOR"

2.3 Multimeter

A device that is used to measure currents, voltages and electrical resistances.

3. BASIC SAFETY RULES

All electricians are suspicious of components that may contain an electrical current. Important: emergency work and work performed under pressure can result in careless mistakes and serious errors being made, even by the most experienced electricians. The information below details a few rules that must be followed when taking electrical measurements.

- **Understanding the installation**
  Measuring range, voltage levels, excess voltage level (excess voltage categories), current values during normal use and in the event of a fault, installation wiring diagram, the capacitive effects of components etc.
- **Wear personal and collective protective equipment when taking measurements with a risk of voltage and electrical current**
- **Delimit the working area and perform the lockout procedures**
- **Whenever possible, switch off the voltage supply to the circuits to be measured.**
  If you have to work with a live circuit, use suitably insulated tools, wear personal and collective protective equipment, remove your watch and any other jewellery, and wear appropriate clothing.
- **Check that there is no voltage present before taking any measurements**
- Residual voltage may still be found on a component that has been removed or a faulty component, which must be eliminated before any measurements are taken with the electricity supply off
- **When working with live circuits, where possible, always keep one hand out of the range of the electrical circuit.**
  This reduces the possibility of creating a closed circuit that passes through one of your arms to the other via your chest and heart. Suspend or position the tester if possible; try to avoid holding it in your hands to minimise the risk of exposure to the effects of electrical transients, and avoid holding the two measurement leads at the same time etc.

- **When measuring current without using a current clamp, switch off the supply before connecting the multimeter to the circuit.**

- **Be familiar with and use a suitable measuring device for the measurement to be taken.**
  Check that it corresponds to the operating range (measurement level, voltage level, excess voltage level or installation level, current values during nominal usage and in the event of a fault).

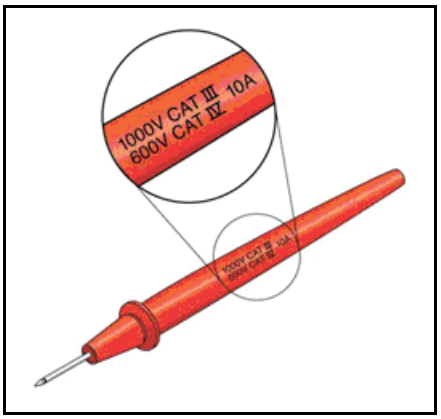

- **Operating voltage range**
  The electrical work and installations are classified into voltage ranges. **Considering the voltages to be measured, the measuring device will be within the minimum low voltage range.**

Voltage ranges		**Alternating current**	**Direct current**
Very low voltage		**Un ≤ 50 V**	**Un ≤ 120 V**
Low voltage	**Range A**	**50 < Un ≤ 500 V**	**120 < Un ≤ 750 V**
	Range B	**500 < Un ≤ 1000 V**	**750 < Un ≤ 1500 V**
High voltage	Range A	**1000 < Un ≤ 5000 V**	**1500 < Un ≤ 7500 V**
	Range B	**Un > 5000 V**	**Un > 7500 V**

- **Excess voltage category**
  The excess voltage category defines the excess voltage that a device can withstand (with or without damage), without posing a danger to the user.
  To limit the risks related to electric shock (human contact with voltage) and material projected through melting, standard IEC 61010 defines the measuring devices and their use depending on the voltage types, networks and measuring devices. **Considering the categories of use, the multimeter should be at least CAT III 600 V.**

Category	Symbol	Overvoltage	Description
4	CAT IV	**6000 V**	Primary source, aerial line and cable system, including distribution busbars and equipment associated with overcurrent protection
3	**CAT III**	**4000 V**	**Fixed installations related to industrial distribution and 230/ 400 V electrical maintenance input circuits for buildings (technical columns, lifts etc.)**
2	CAT II	**2500 V**	Portable or domestic devices and equipment, **230 V** single phase mains sockets.
1	CAT I	**500 V**	Special equipment or equipment that is part of category II, telecommunication, electronics, insulation transformer, **60 V** battery etc.

- **Insulation class**
  The insulation class defines the protection level against electric shocks during normal service and the protection level against electric shocks in the event of a fault. **In view of the requirements, the measuring device should be at least class 2.**

Class	Specifications	Use	Symbol
0	Basic insulation: the device has a functional insulation with no earth. It is not possible to connect the earths to each other or to ground The plugs of this equipment have no earth pin. The structure could have a potential that is dangerous to humans (due to an insulation fault for example) if the fault is not detected before contact is made.	Usage is forbidden on work sites. Note: The sale of class 0 equipment is forbidden in Europe.	No symbol

Class	Specifications	Use	Symbol
1	Basic insulation: the device has a functional insulation with an earth terminal and equipotential connection. The earths are connected to each other and to ground. This equipment has plugs with an earth, which is connected to the metallic parts.	Usage is possible on work sites for fixed machines	IEC 60417-5019
2	**Reinforced insulation (or double insulation): the device has reinforced insulation without accessible metallic parts. The earths are not connected to ground. The equipment plugs do not have an earth pin.**	**Usage is possible on work sites for non-fixed machines**	**IEC 60417-5172** 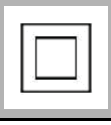
3	The device operates at a very low safety or protection voltage (TBTS) of a maximum of **50 Volts**. The voltage must be lowered using a safety transformer, which provides safe galvanic insulation between the primary and secondary circuits. The earths are not connected to ground.	Mandatory on mobile devices that are not fixed and in a confined environment that is humid or damp	IEC 60417-5180

- **Protection index**
  This index classifies the protection level offered by a piece of equipment against solid body and liquid intrusions. **The multimeter must have a protection index at least equal to IP54.**

Index	1st number ➨ Protection against dust	2nd number ➨ Protection against water
0	No protection.	No protection.
1	Protected against solid bodies larger than **50 mm**.	Protected against vertically falling drops of water.
2	Protected against solid bodies larger than **12 mm**.	Protected against drops of water falling at up to **15°** from the vertical.
3	Protected against solid bodies larger than **2.5 mm**.	Protected against drops of rain water at up to **60°** from the vertical.
4	Protected against solid bodies larger than **1 mm**.	**Protected against projections of water from all directions.**

Suffix	1st number ➨ Protection against dust	2nd number ➨ Protection against water
5	**Protected against dust.**	Protected against jets of water from all directions.
6	Completely protected against dust.	Protected against jets of water of similar force to heavy seas.
7		Protected against the effects of immersion.
8		Protected against the prolonged effects of immersion under pressure.

- **Be familiar with, use and check the leads suited to the measurement to be taken.**
  The measuring leads are an important component involved in the safety of your multimeter. Check that your measuring leads correspond to the measuring level to be taken. Choose leads with double insulation, shielded input connectors, finger guards and a non-slip surface.

- **Check and ensure that everything is in good condition and that the equipment works correctly. Only use devices and connection accessories that comply with the safety standards** (IEC 61010).
  In the event of a fault, invest in a new device as the cost will most certainly be less than that of hospitalisation. In the event of a fault, the devices are in direct physical contact with the user!

- **Check that your device has been certified by an independent test laboratory.**
  Something to consider to prevent you from choosing the cheapest multimeter: being the victim of an accident at work because the cheap tester did not actually have the safety specifications stated!

- **Use a multimeter equipped with overload protection in resistance mode**

- **Replace the melted fuse with a fuse that has the same specifications as the original fuse and meets the manufacturer's specifications.**
  Its rated silicon fuse has been specially designed to make your tester safe by preventing an overload from reaching your hand. Use a multimeter equipped with fuses at its current measurement inputs and check the fuses before taking any current measurements.
- **Use the multimeter to test the continuity of the test leads**
- **Only use test leads equipped with insulated terminals and finger guards**
- **Only use multimeters equipped with recessed inputs**
- **Select the function and the scale suited to the measurement beforehand**
- **Always disconnect the "hot" test lead first: the red lead.**

4. PRINCIPLES

In order to guarantee the safe operation of the devices and electrical installations, all conductors are insulated by a sheath for the cables and by varnish for the windings. When the quality of the insulation deteriorates, a leakage current can circulate from one conductor to the other. This is an electrical insulation fault.

This may cause:

- installation faults (risk of erratic stopping or starting)
- short circuits (risk of overheating or fire)
- personal protection faults (risk of serious burns or electric shocks that may cause death).

4.1 Cause of fault?

The quality of the insulation changes over time as a result of the stress to which this equipment is subjected. This causes a decrease in electrical resistance and an increase in leakage current.
This fault can generate incidents, the severity of which can have consequences in terms of personnel safety, the safety of goods, production downtime costs for professionals and customer immobilisation.
It is possible to classify these causes of insulation faults into several groups. These different causes combine together mutually in the absence of corrective measures.

Electrical stress:

- Mainly linked to excess voltage and under voltage

Mechanical stress:

- Starting and stopping sequences particularly when they are frequent
- Rotating machine balancing faults and
- All direct impacts to cables and installations affect the insulation performance of the materials.

Chemical stress:

- The proximity of chemical products, oils, corrosive vapours and dust affect the insulation performance of the materials

Stresses related to temperature variations:

- In combination with the mechanical stress caused by equipment starting and stopping sequences, the stress of expansion or contraction affect the characteristics of the insulating materials. Operation at extreme temperatures is also a factor that causes the materials to age

Environmental contamination:

- Development of mildew and particle deposits in hot and humid environments contribute to negatively affecting the insulation characteristics of the installation

Climatic environment:

- Humidity is a source of insulation faults. Take care when the vehicle is wet, damp or humid. When a vehicle enters and leaves a dealership, starting the vehicle can generate dew and condensation points, which can affect the equipment insulation

4.2 Preventive and corrective maintenance

Periodic insulation tests must be performed on the installations and new or renovated equipment. This makes it possible to avoid incidents and to detect ageing components.

The checks can be:

- manual using electronic and electrical diagnostic tools or
- automatic by means of an automatic check integrated into the vehicle.

In the event of an automatic check, a preventive check to verify the correct operation of the measuring sensors may be required.
For this, refer to the wear maintenance range and/or the electrical and electronic fault finding methods for the vehicle.

4.3 Measuring principle

An insulation check may be performed to earth, to "+ (plus)", "**–** (minus)" or between conductors using:

- an ohmmeter - installation with no voltage supply and locked out
- an insulation tester - installation with no voltage supply and locked out or
- a voltmeter - live installation.

The insulation tester is used to measure the resistance of the materials when the ohmmeter reaches these measurement limits. It is for this reason that it is not always possible to use an ohmmeter alone to measure the insulation resistance. In this case, an insulation tester is used.

Note:
An undefined resistance is indicated by "OL" (out of limits) on a device when the resistance is greater than the values measurable by the device.

It is necessary to refer to the technical specifications of the device to find out the measurement limits.

It is important not to mix up the dielectric strength tests, also called "flash test", which expresses the ability of an insulating material to withstand excess voltages of average duration without causing priming. The dielectric test is quite destructive in the event of a fault, depending on the test levels and the energy available in the device. The device required for this type of measurement is a dielectrometer. This is not the subject of this document.
Measuring the insulation resistance is not destructive under normal test conditions. It is performed by applying a known direct voltage and provides a result expressed in **k**Ω (kiloohm), **M**Ω (megaohm), **G**Ω (gigaohm). This resistance expresses the quality of the insulation between two conducting components. This measure is taken using an **insulation tester,** which is also called a **megohmmeter**.

4.4 Measuring principle of an insulation tester

The operating principle of an insulation tester is based on Ohm's law:

$$U = I \times R \quad \textbf{or} \quad R = \frac{U}{I}$$

(**R**: resistance in Ohms – **I**: current in amps – **U**: voltage in volts).

The insulation tester generates a known direct voltage (**50 V**, **100 V**, **250 V**, **500 V**) selected by the user, then measures the leakage current escaping from the conductor through the insulation. Once these values are obtained, it calculates the resistance and therefore the insulation. The lower the leakage current, the higher the resistance value displayed and therefore the better the insulation.

For example, if a voltage of **500 V** is applied between the earth and a conductor.

The current measured with the insulation tester has a current of **1 mA**.

$$R = \frac{U}{I} \Rightarrow R = \frac{500V}{0{,}001A} \Rightarrow R = 500\,000\,\Omega = 500\,k\Omega$$

If the current measured is hundred times lower, i.e. **0.00001 A** or **10 µA**.

$$R = \frac{500V}{0{,}00001A} = 50\,M\Omega$$

The example below shows a situation where the ohmmeter is no longer able to take the measurement. We want to check an insulation greater than **80 MΩ**.
After having checked that there is no voltage, we measure the resistance between a direct **400 V** phase and the earth. The ohmmeter displays out of limits "OL". It has reached its maximum measuring limit. We will therefore use an insulation tester.

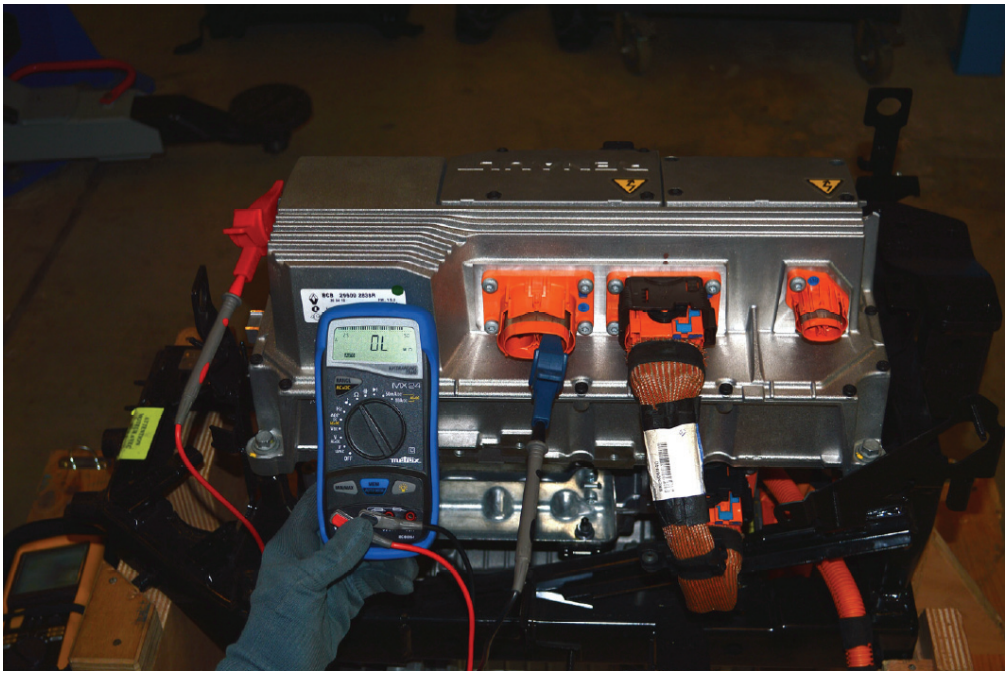

The insulation tester displays a resistance of **3324 M** when we measure the resistance between a phase and the earth on a component. In order to confirm that a part is compliant, the measured resistance must be greater than the minimum value given by the manufacturer in the fault finding manuals.

5. SEARCHING FOR A FAULT

5.1 Searching with an ohmmeter

An earth insulation check consists of checking that a component, receiver or conductor does not touch the earth. Using an ohmmeter, we measure the following with no voltage:

- If **R = "OL"** (Out of limits: infinite) between the controlled line and the earth, the earth insulation check may be correct.
  Important: an out of limits resistance is indicated by "OL", which means that the resistance exceeds the measuring limits of the device. On circuits supplied by the traction battery of an electric vehicle, it is necessary to refer to the minimum reference resistance required in the fault finding manuals.

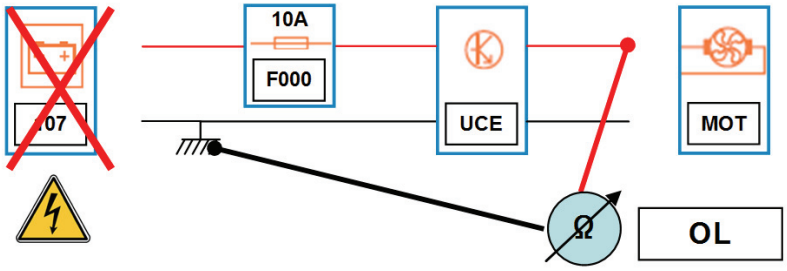

107: **12 V** battery
F000: fuse
UCE: computer – Electronic Control Unit
MOT: Electric motor

- If, for example, **R = ?** Ω (Ohm), there is a short circuit to "earth".

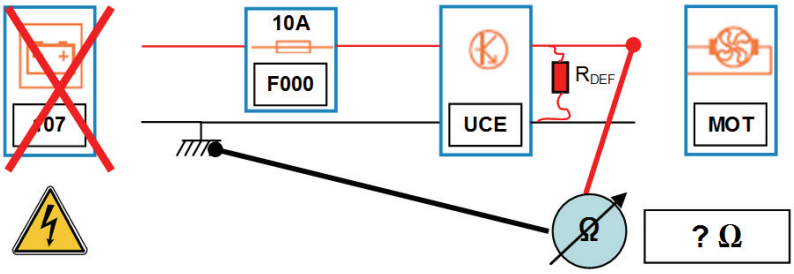

R_{DEF}: FAULT resistance

5.2 Searching for a mutual short circuit with an ohmmeter

A mutual insulation check consists of checking that two or more wires do not touch each other
The operation must be repeated as many times as there are wires in the wiring harness concerned.
Using an ohmmeter, we measure the following with no voltage:

- If **R = OL** (infinite) between these two wires, the circuit is correct
- If **R = ?** Ω (Ohm), there is a mutual short circuit.

5.3 Searching with an insulation tester

An insulation check consists of checking that a component, receiver, conductor or earth is not in direct contact.
With an insulation tester, we measure the insulation between a supply cable and the earth or two supply cables with no voltage supply to check for short circuits and insulation faults.

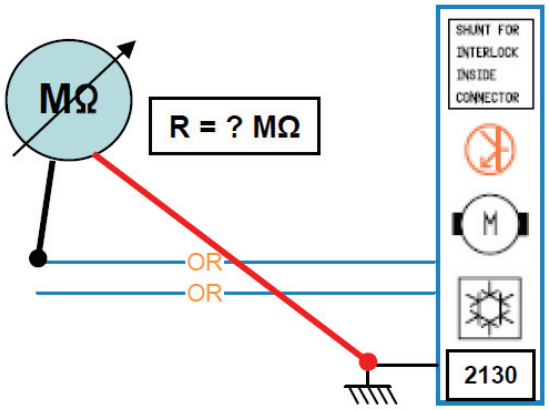

2130: air conditioning compressor

To interpret the measurement, it will be necessary to refer to the minimum reference value required in the fault finding manuals.

- If **R** > "reference value" **M**Ω, the circuit is correct
- If **R** ≤ "reference value" **M**Ω, the circuit is incorrect.

5.4 Searching with a voltmeter

WARNING

DANGER: LIVE INSTALLATION

Risk of serious burns or electric shocks that may prove fatal.
Do not do perform this check using an ohmmeter, an insulation tester, an ammeter or devices other than a voltage absence tester or voltmeter.

With the voltmeter or voltage absence tester, we measure the following with a voltage supply:

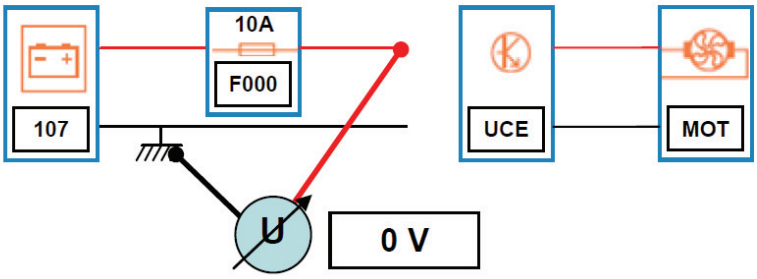

107: battery
F000: fuse
UCE: computer – Electronic Control Unit
MOT: Electric motor

- If **U =** 0 V between the checked line and the "+ battery", the earth insulation check is correct.

Important: a circuit can be cut. In this case, the voltage measured will also be equal to zero volts

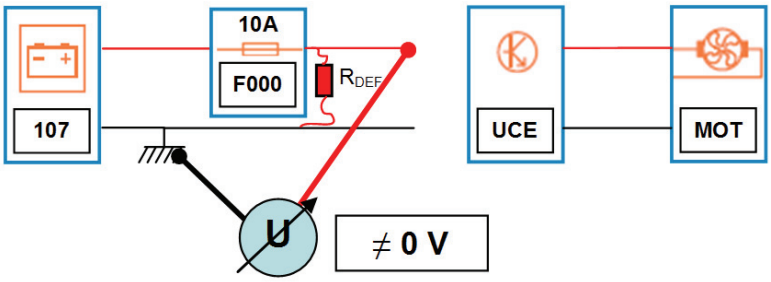

- If **U ≠ 0 V** non permanent, there is a capacitive discharge effect
- If **U ≠ 0 V** permanent, there is a short circuit to "± battery".

5.5 Measuring insulation on a voltage generator

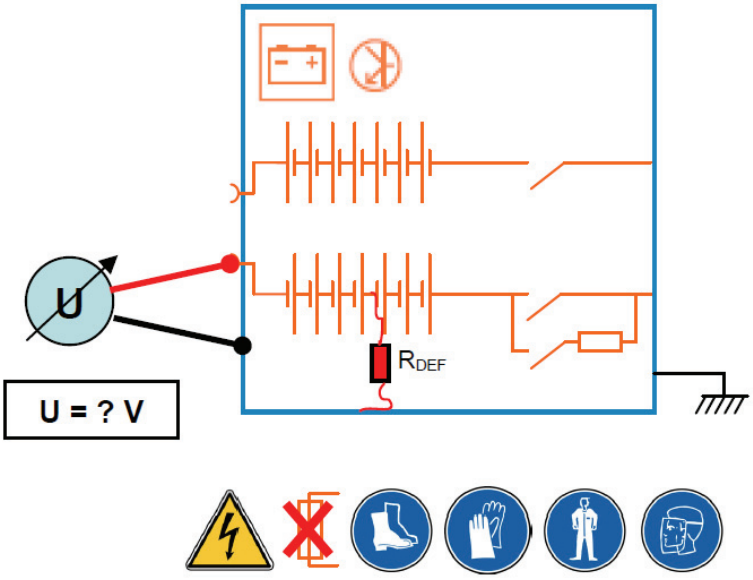

- If **U = 0 V** between the checked line and the "+ battery", the earth insulation check or internal circuit check is correct
- If **U ≠ 0 V non permanent**, there is a capacitive discharge effect
- If **U ≠ 0 V permanent**, there is a short circuit to "± battery" or an insulation fault between at least one phase and the earth.

Example of the principle of checking a traction battery using the base of the traction battery safety circuit breaker of a FLUENCE vehicle.

- Check that your voltage absence testing device operates correctly

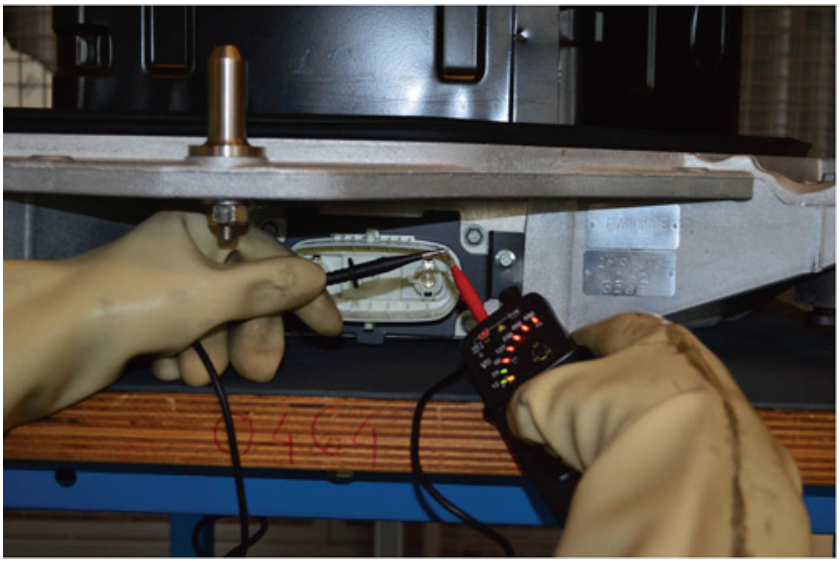

- Check that there is no voltage between the phases and earth and between the phases (3 measurements to be performed).
    - Measurement between phase

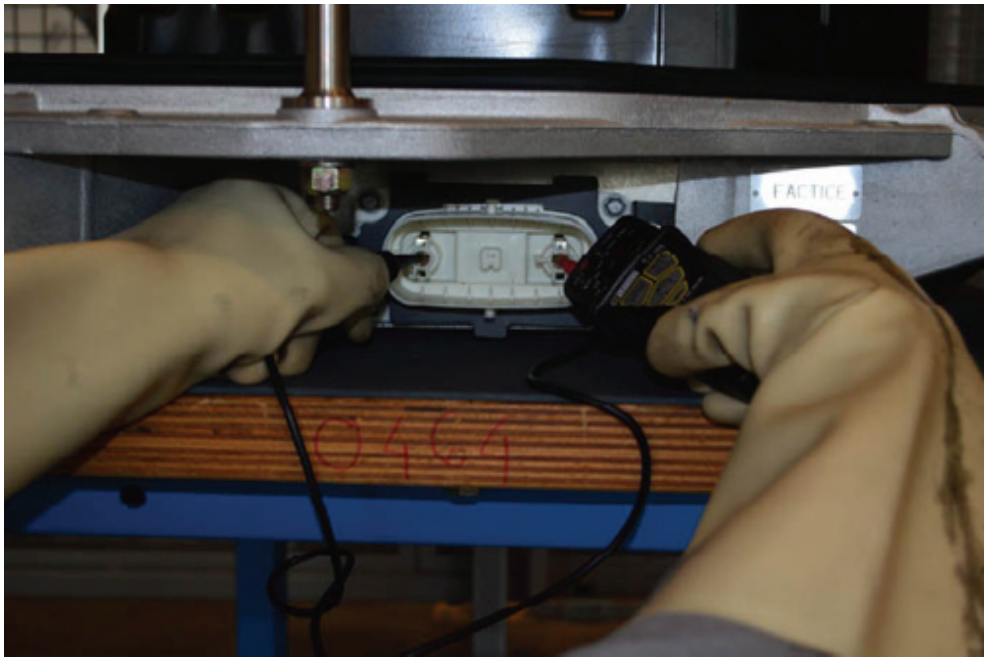

- First measurement between phase and earth

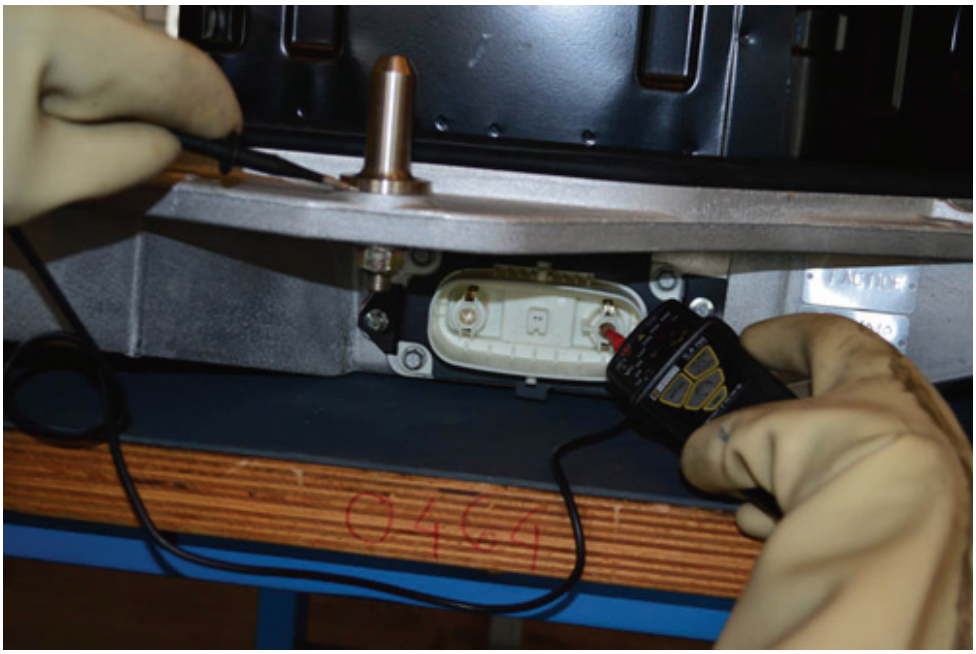

- Second measurement between the other phase and earth

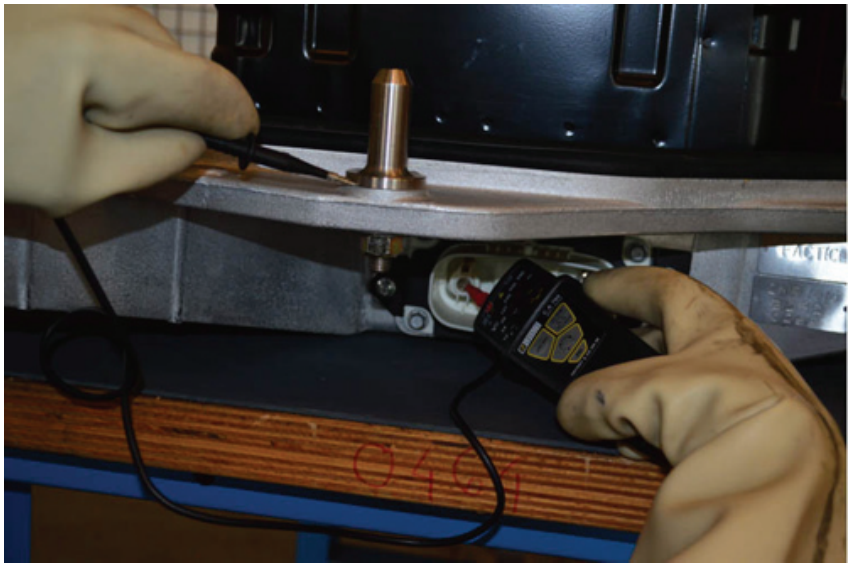

- Check that your voltage absence testing device operates correctly after the measurements.

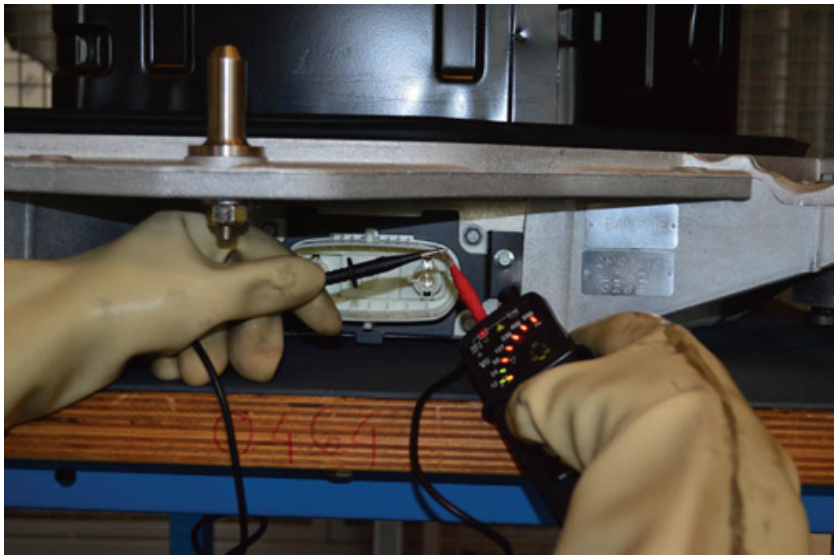

Values measured	Possible interpretation
U = 0 V	The earth insulation check or internal circuit check is correct.
U ≠ 0 V non permanent	There is a capacitive discharge effect. Discharge the circuit before carrying out any operations.
U ≠ 0 V permanent	Short circuit to the "± battery" or insulation fault between at least one phase and the earth.

6. EQUIPMENT RECOMMENDATION SHEET

6.1 Voltage Absence Tester

6.1.1 Main functions

Used to check that there is no voltage on an electrical installation.

6.1.2 Main specifications

- In accordance with the current standard IEC/EN 61243-3
- Excess voltage category: **600 V** CAT III minimum
- Insulation class: class 2 minimum
- Self-test function: it must have a self-test function to check correct operation before and after using the function
- Must have an audible and visual warning to indicate the presence of voltage
- Must have a diode in the event of the presence of a dangerous voltage level (> **50 V)** even if the batteries are drained or removed. This device is called a "Redundancy circuit"
- Must automatically detect the type of current (direct or alternating)
- Must include a device designed to ensure the operator's safety and must not be equipped with fuses

6.2 Multimeter and current clamps

6.2.1 Main functions

Used to measure the electrical values of all internal combustion vehicles and electric vehicles in the RENAULT group.

6.2.2 Main specifications

- Excess voltage category: **600 V** CAT III minimum
- Insulation class: class 2 minimum
- To protect against incorrect connections, the multimeter must have a protection circuit with automatic resetting. This circuit detects overload conditions and protects the device until the risk has disappeared. In automatic resetting mode, the multimeter is ready to operate once the incorrect connection has been corrected
- TRMS device (AC + DC)
- Voltage measurement function
  ➔ AC and DC voltage range: **0 to + /- 600 V**
- Current measurement function
  ➔ AC and DC current range: **0 to 1000 A**
- Resistance measurement function
  ➔ Measurement range: **0 to 10,000 Ohms**
- Capacity measurement function
  ➔ Measurement range: **30 nF to 5 mF**
- Bandwidth: **10 Hz – 10 Khz**

6.3 Insulation tester

6.3.1 Main functions

Used to measure the insulation resistance of two conductors in order to assess the insulation quality and therefore to anticipate the risk of leakage currents.

6.3.2 Main specifications

- Excess voltage category: **600 V** CAT III minimum
- Insulation class: class 2 minimum
- To protect against incorrect connections, the insulation tester must have a protection circuit with automatic resetting. This circuit detects overload conditions and protects the device until the risk has disappeared. In automatic resetting mode, the multimeter is ready to operate once the incorrect connection has been corrected
- Detection of live circuits to prevent any insulation tests in the event of a direct or alternating current above **25 V**
- An "electrical danger" pictogram or warning is displayed as soon as the voltage generated is likely to be dangerous
- The insulation tester must have internal circuits that discharge the voltage in the circuits automatically and in complete safety
- Insulation resistance measurement function:
  ➔ Measurement range: **0 to 20 GΩ**
- Test voltages:
  ➔ **50 V**, **100 V**, **250 V**, **500 V**
- As an option, the device will be able to be supplied with a remote control sensor.

7. USING THE MEGOHMMETER

Note:

Before any operation, refer to the user manual for your measuring device.

7.1 Prerequisites

Before taking the measurements, check that the vehicle is dry and at ambient temperature.

7.2 Pre-test safety

1. The test must be performed on an installation WITH THE ELECTRICITY SUPPLY OFF and disconnected in order to ensure that the test voltage will not be applied to other equipment that could be electrically connected to the circuit to be tested.

   Ensure that the circuit is discharged. The discharge can be performed by short circuiting the equipment terminals and/or connecting them to earth for a long enough period of time using the insulation tester.

- Check that your voltage absence testing device operates correctly

- Check that there is no voltage between the phases and earth and between the phases (3 measurements)

- Check that your voltage absence testing device operates correctly

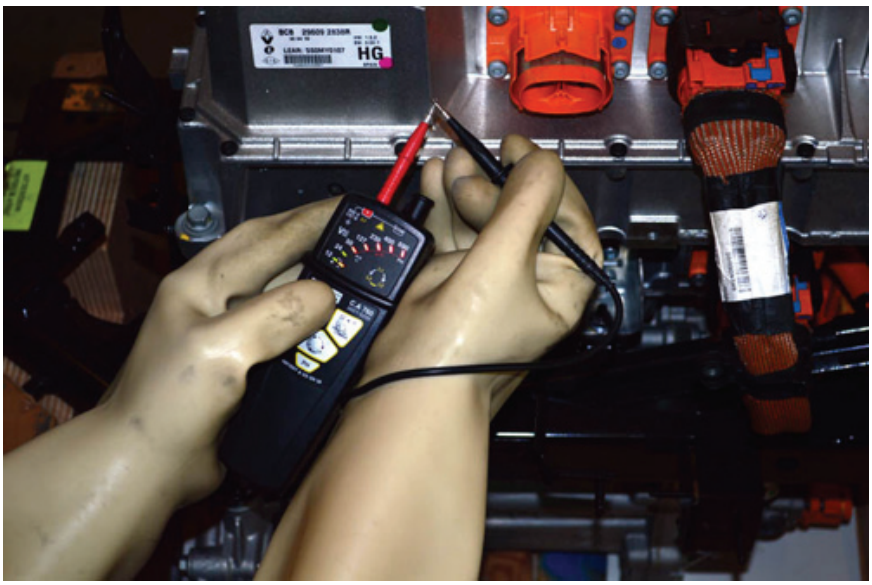

2. Do not test the vehicle or equipment when it is located in a flammable or explosive environment. In the event of an insulation fault, sparks can occur during insulation discharge before and after the test or during the test.
3. Minimise personnel access by delimiting the area and wear electrical personal protective equipment. When taking measurements, there may be high measurement voltages that are greater than the safety voltages to which people can be exposed.
4. Only use appropriate connection cables for the test to be performed and ensure that they are in excellent condition. Inappropriate cables will cause measurement errors and may be dangerous.

7.3 Measuring

5. Switch on the device by positioning the switch in position **M** and choosing the desired voltage (**50 V**, **100 V**, **250 V** or **500 V**).
6. Check that all the displays are operational and that the battery charge level is correct.
7. The test voltage is determined according to the service voltage of the devices. The table below gives the recommended test voltages according to the service voltages of the installations and equipment.

Service voltage cable/equipment	Direct current test
24 to **50 V**	**50** to **100 V**
50 to **100 V**	**100** to **250 V**
100 to **240 V**	**250** to **500 V**
240 to **550 V**	**500 V**

It is advisable to use the electrical and electronic fault finding manuals in order to establish the recommended test voltages to be applied.

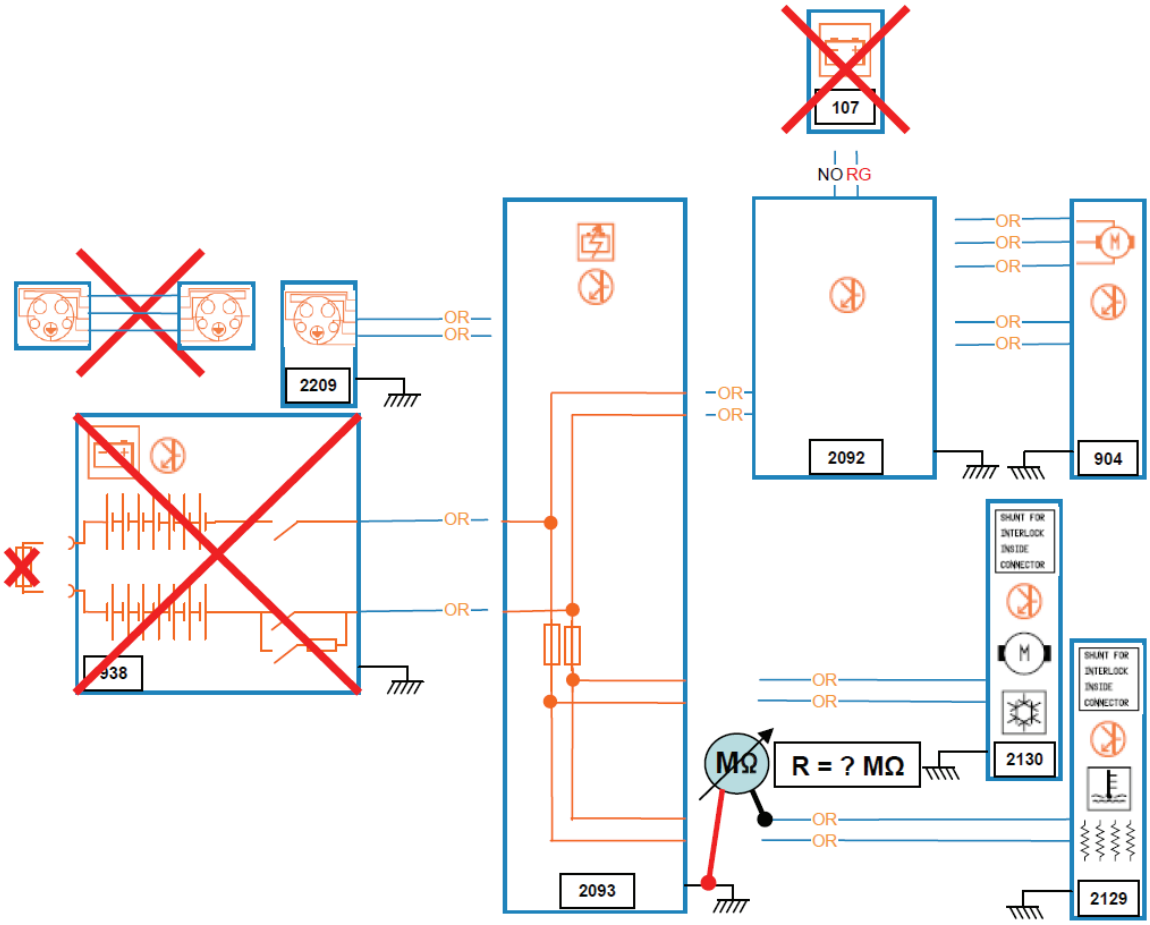

Example of electrical layout

107: **12 V** battery
904: traction motor
938: traction battery
2092: electronic power unit
2093: battery charger unit
2129: passenger compartment heater
2130: air conditioning compressor
2209: charging socket

8. Check between a conductor and the electrical earth or physical earth. To do this, connect the lead of the "+" (plus) terminal of the insulation tester to the cold point and the lead of the "-" (minus) terminal of the insulation tester, or the remote control sensor, to the hot point. Crocodile clips are preferable to manually-held test probes.

   The following is understood:

   - Cold point: neutral, electrical earth, physical earth
   - Hot point: a phase.

   The insulation tester measures and displays the presence of voltage between its terminals as soon as it is switched on. Before you begin to measure the insulation, check that there is no voltage present on the terminals to be checked.

   - If the voltage on the vehicles is greater than **25 V**, a warning is displayed and/or a discontinuous signal is emitted; it is not possible to take the measurement. Do not measure the insulation or resistance when the presence of voltage is reported
   - If the voltage present on the vehicles to be checked is less than **25 V**, it is possible to the measure the insulation, but it is vitiated by an error that is progressively bigger the lower the test voltage. The voltage should be close to **0 V**
   - If there is no dangerous voltage, the user can then measure the insulation.
9. Press and hold the "TEST" button so that the measurement is taken over 30 to 60 seconds.

   The measurement voltage is generated between the terminals (marked "+" and "-").

   The value of the measurement is shown on the logarithmic scale of the bargraph and on the digital display, with the corresponding **M**Ω or **G**Ω symbol.

   If the numerical value varies significantly in the values above **500 M**Ω, this means that the charge is extremely capacitive. In this case, read the measurement on the bargraph.
10. Note the value displayed.
11. At the end of the measurement, release the "TEST" button and wait until the device tested is discharged to a voltage below **25 V** before disconnecting the leads. As soon as you release the measurement request "TEST" button, the insulation tester switches back to measuring the voltage.

    The insulation tester performs a capacitive discharge of the circuit. These insulation testers must have internal circuits that ensure this discharge occurs automatically and in complete safety.

    When a generated voltage is likely to be dangerous, the "electrical danger" symbol is displayed.
12. Wait until the voltage reaches **0 V**. At the end of the test, the installation has accumulated a quantity of energy, which must be discharged before any other operation is performed.
13. When you have finished taking your measurements, switch off the device by turning the switch to the OFF.

HEADLIGHT: ADJUSTMENT

Equipment required
headlight adjustment and checking tool

Note:

The vertical-beam must remain between -0.5%and -2.5%, according to the driver weight.

This adjustment is to be performed, vehicle unladen, with the driver.

ADJUSTMENT

1. PREPARATION OPERATION FOR CHECK

- Place the vehicle on a level horizontal surface.
- Do not apply the parking brake.
- Check and inflate the tyresTyre pressure: Identification .
- Remove the front bumper upper stripExterior body front trim assembly: Exploded view .
- Check that the headlights are clean.
- Turn on the dipped beam headlights.

2. TEST OPERATION

1- ORIGINAL ADJUSTING VALUES

Note:

The values indicated in the following method correspond to the dimension of the spring compression of the adjustment screws.

1)LEFT-HAND HEADLIGHT

LEFT-HAND HEADLIGHT

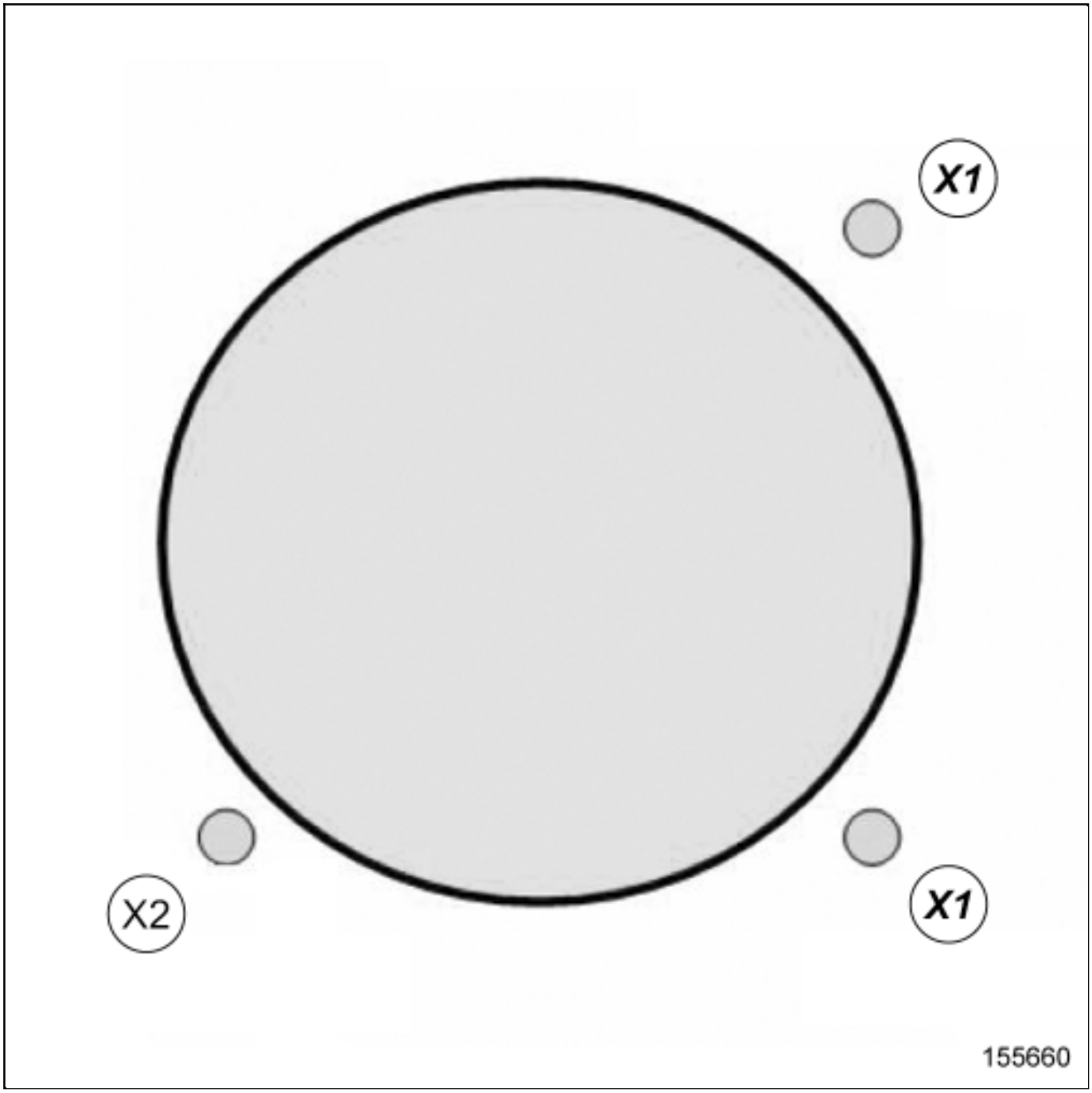

(X1) 11 mm

(X2) 7 mm

Adjust the adjustment screws at the dimension as shown above.

2)RIGHT-HAND HEADLIGHT

RIGHT-HAND HEADLIGHT

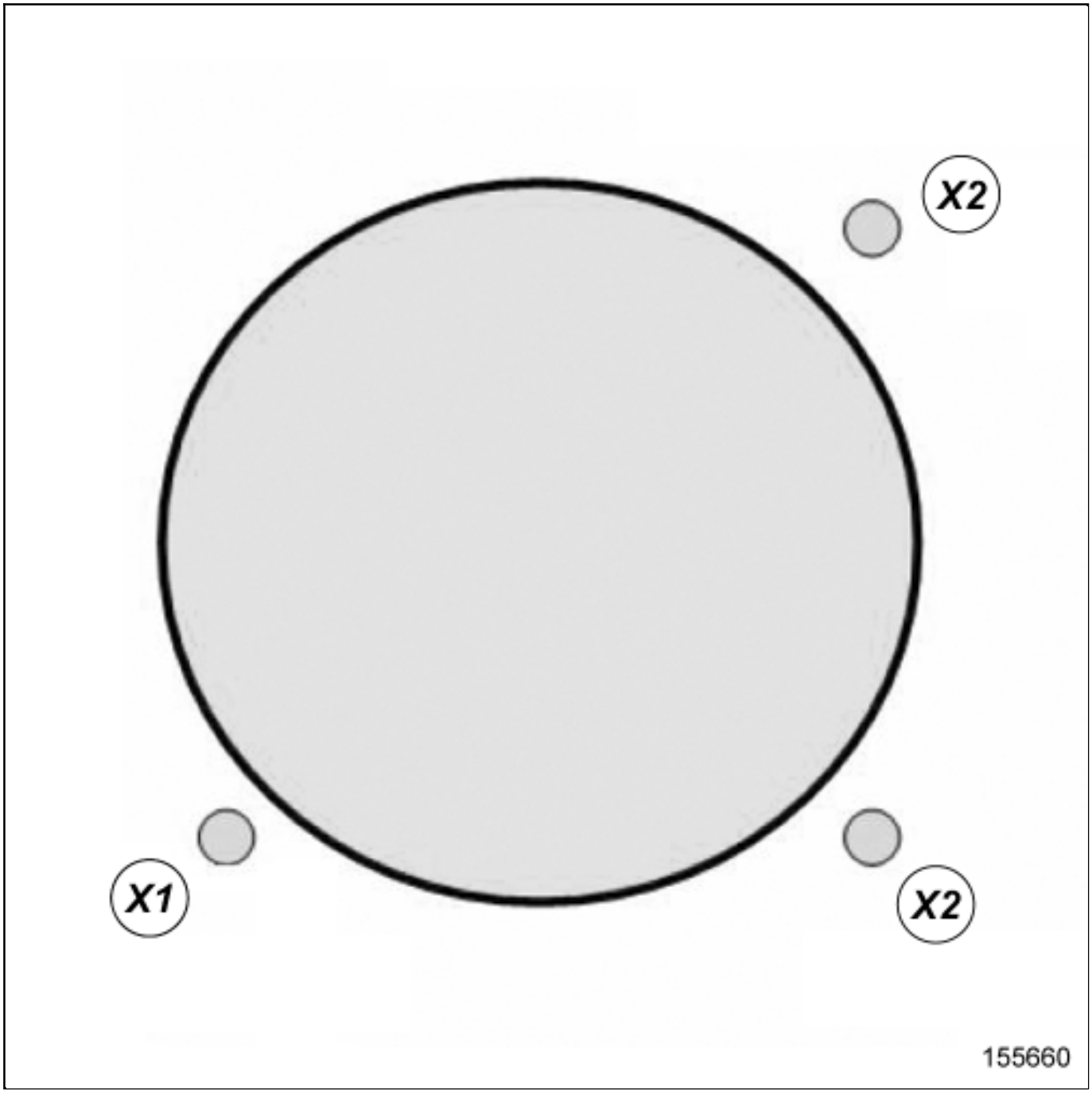

(X1) 11 mm

(X2) 7 mm

Adjust the adjustment screws at the dimension as shown above.

2- TEST OPERATION

- Place the headlight adjustment and checking tool adjusted to -1.5% in front of the vehicle.

3. ADJUSTMENT OPERATION

1- BEAM ADJUSTMENT

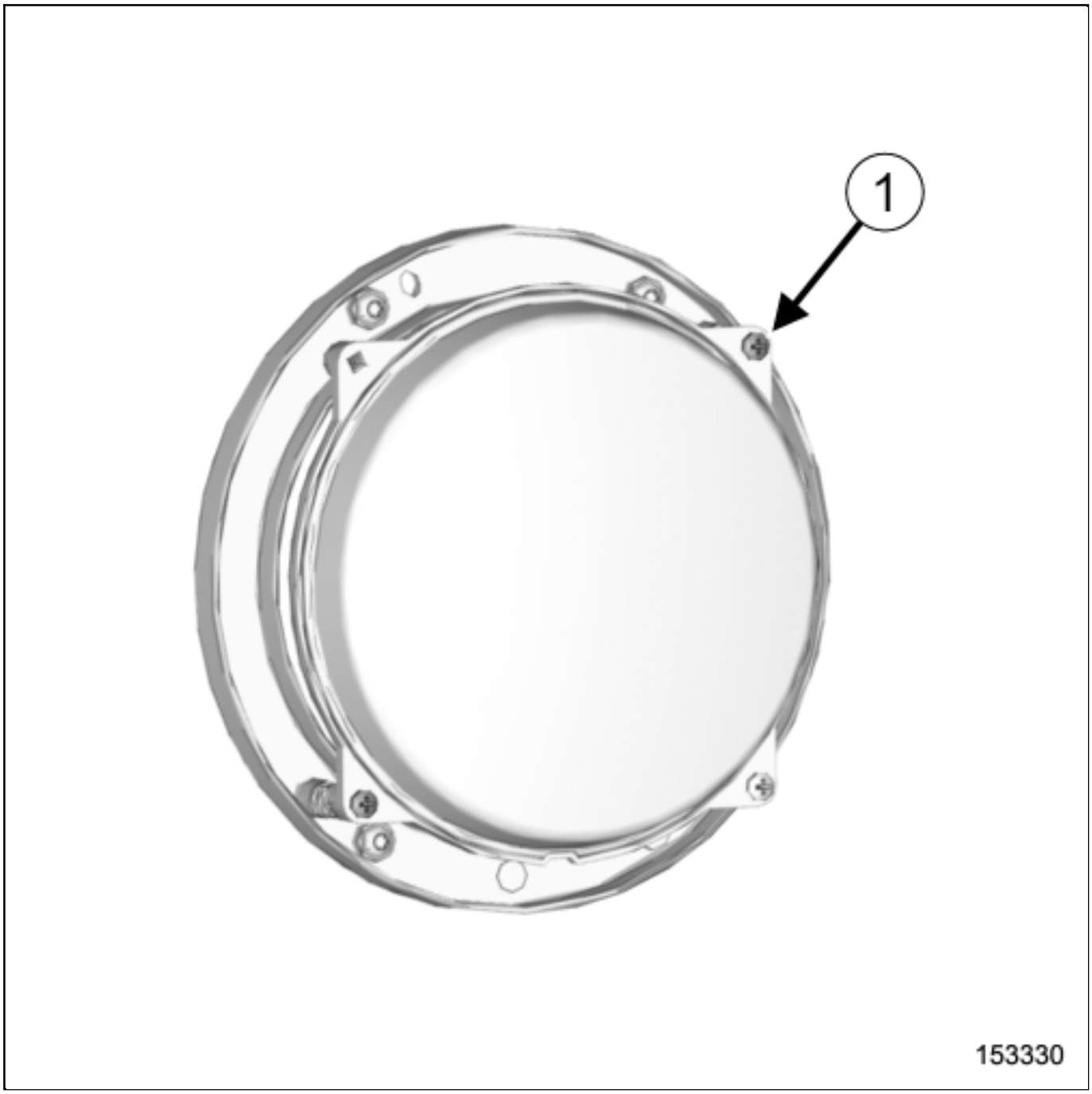

- Adjust the headlight beam using the headlight adjustment and checking tool and by turning the screw(1) .

2- HORIZONTAL ADJUSTMENT

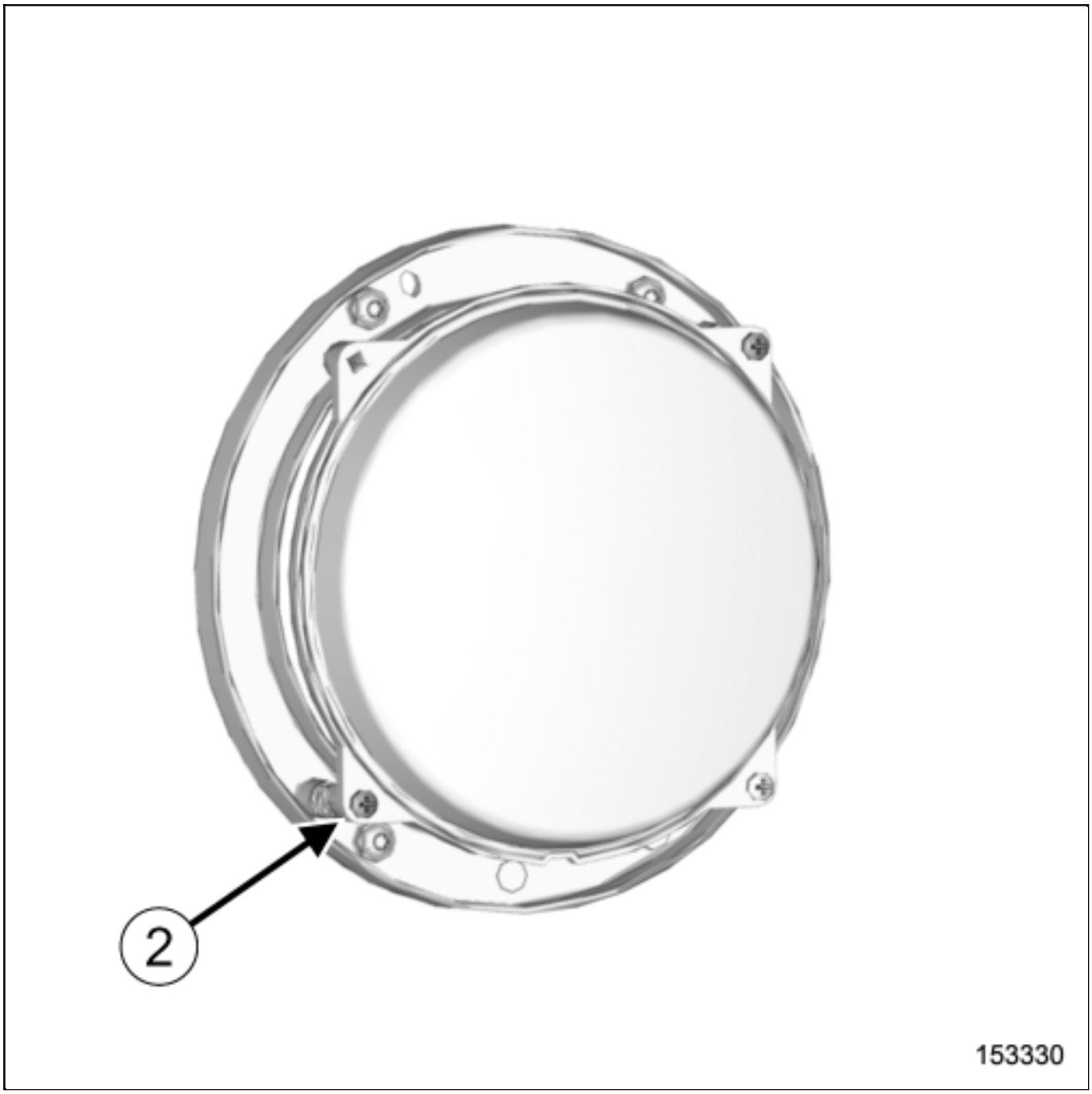

- Use the headlight adjustment and checking tool to horizontally adjust the headlight by turning the screw (2) .

4. FINAL OPERATION

- Refit the front bumper upper strip Exterior body front trim assembly: Exploded view .

HEADLIGHT BULB: REMOVAL - REFITTING

Note, one or more warnings are present in this procedure

WARNING

- To avoid all risk of damage to the systems, apply the safety and cleanliness instructions and operation recommendations before carrying out any repair:
  - Vehicle: Precautions for the repair .

Location and specification (tightening torques, parts always to be replaced, etc.)(see 80B, Headlights, Front signals - lighting assembly: Exploded view) .

REMOVAL

1. REMOVAL PREPARATION OPERATION

- Remove the front bumper upper strip Exterior body front trim assembly: Exploded view .
- Remove the headlight (see 80B, Headlights, Front signals - lighting assembly: Exploded view) .
- Disconnect the headlight connectors.

2. REMOVAL OPERATION

1- DIPPED BEAM HEADLIGHT AND MAIN BEAM HEADLIGHT BULB

- Remove (see 80B, Headlights, Front signals - lighting assembly: Exploded view) :
  - the headlight cover,

the headlight bulb.

2- SIDE LIGHT BULB

- Unclip the side light bulb holder(see 80B, Headlights, Front signals - lighting assembly: Exploded view) .

- Remove the side light bulb(see 80B, Headlights, Front signals - lighting assembly: Exploded view) .

REFITTING

- Proceed in the reverse order to removal.

Repair-80x02x02x07-01x37-1-24-1.xml

XSL version : 3.02 du 22/07/11

HIGH VOLTAGE CONNECTOR BETWEEN CHARGER AND TRACTION BATTERY : REMOVAL - REFITTING

Note, one or more warnings are present in this procedure

Special tooling required	
Set of trim removal levers.	Car. 1363

Locations and specifications (tightening torques, parts always to be replaced, etc.)(see 19E, Traction battery, Traction battery housing assembly : Exploded view) .

WARNING

- To avoid all risk of damage to the systems, apply the safety and cleanliness instructions and operation recommendations before carrying out any repair:
  - (see 19E, Traction battery, Traction battery : Precautions for the repair) ,
  - Vehicle: Precautions for the repair .

WARNING

DANGER: HIGH VOLTAGE VEHICLE.

Risks of serious burns or electric shock that may prove fatal.

Before carrying out any work on the vehicle, it is essential that you adhere to the instructions regarding vehicle voltage cut-off. This work must be carried out by an employee who is qualified and authorized to work on a high-voltage onboard network.

REMOVAL

1. REMOVAL PREPARATION OPERATION

- Remove the traction battery upper cover(see 19E, Traction battery, Traction battery housing assembly :

Exploded view) .

2. REMOVAL OPERATION

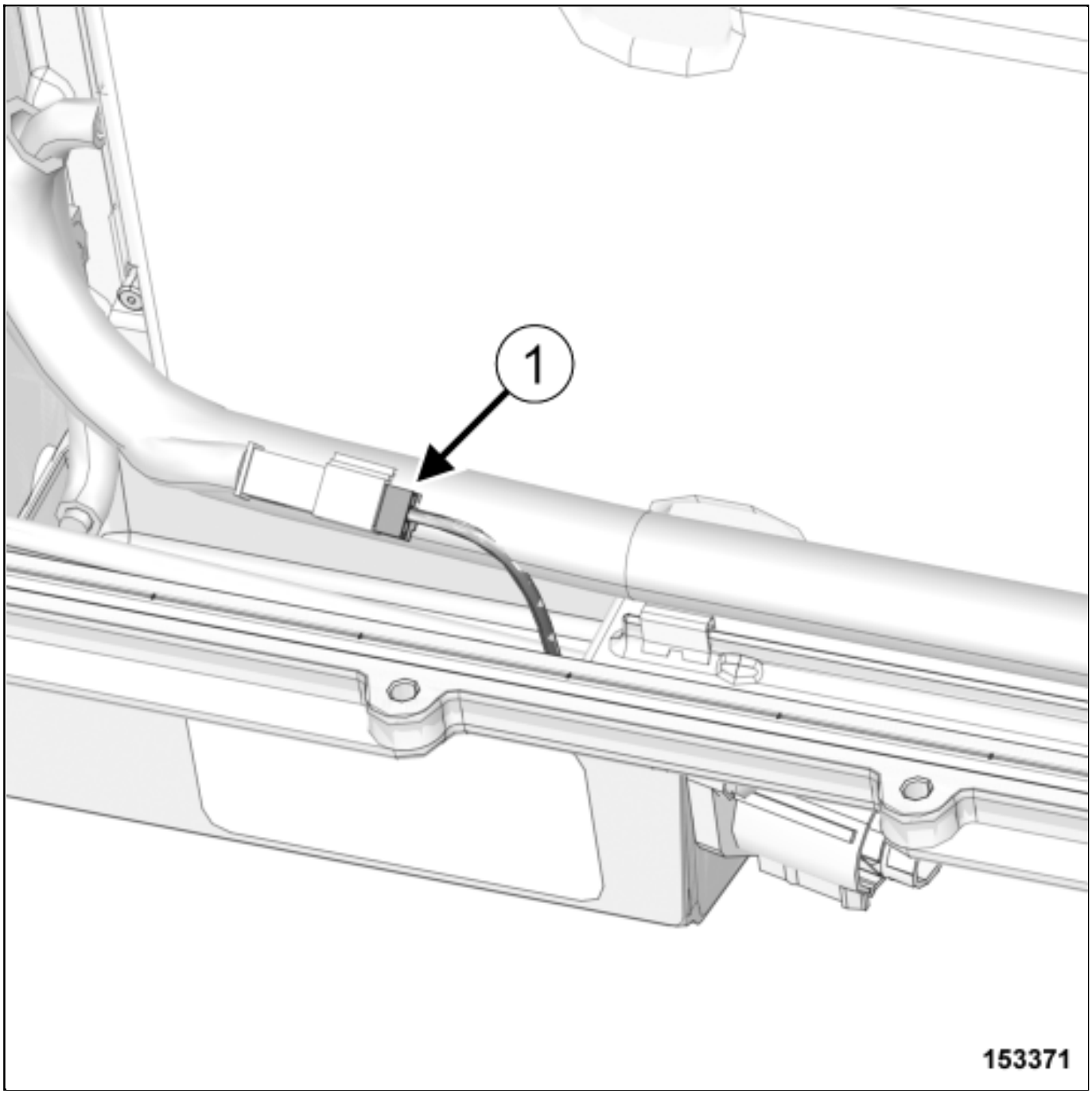

❑

Disconnect the high voltage connector between the charger and traction battery interlock plug(1) using the toolSet of trim removal levers.(Car. 1363) .

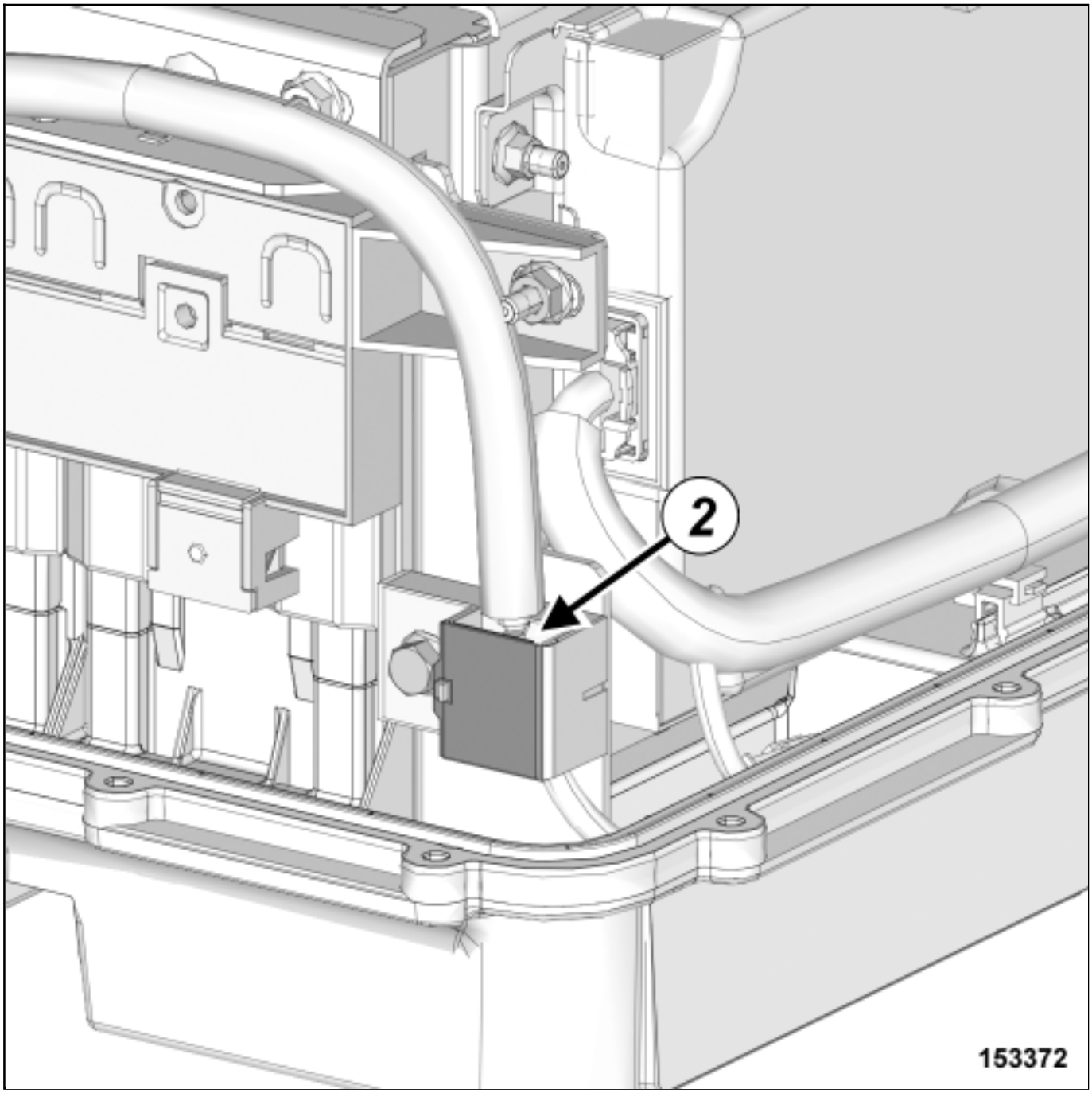

- Unclip the protective cover(2) of the "+" terminal using the toolSet of trim removal levers.(Car. 1363) .

- Remove the electric connection nut of the "+" terminal using an insulated magnetic H10 socket (see 19E, Traction battery, Traction battery module stack assembly : Exploded view) .

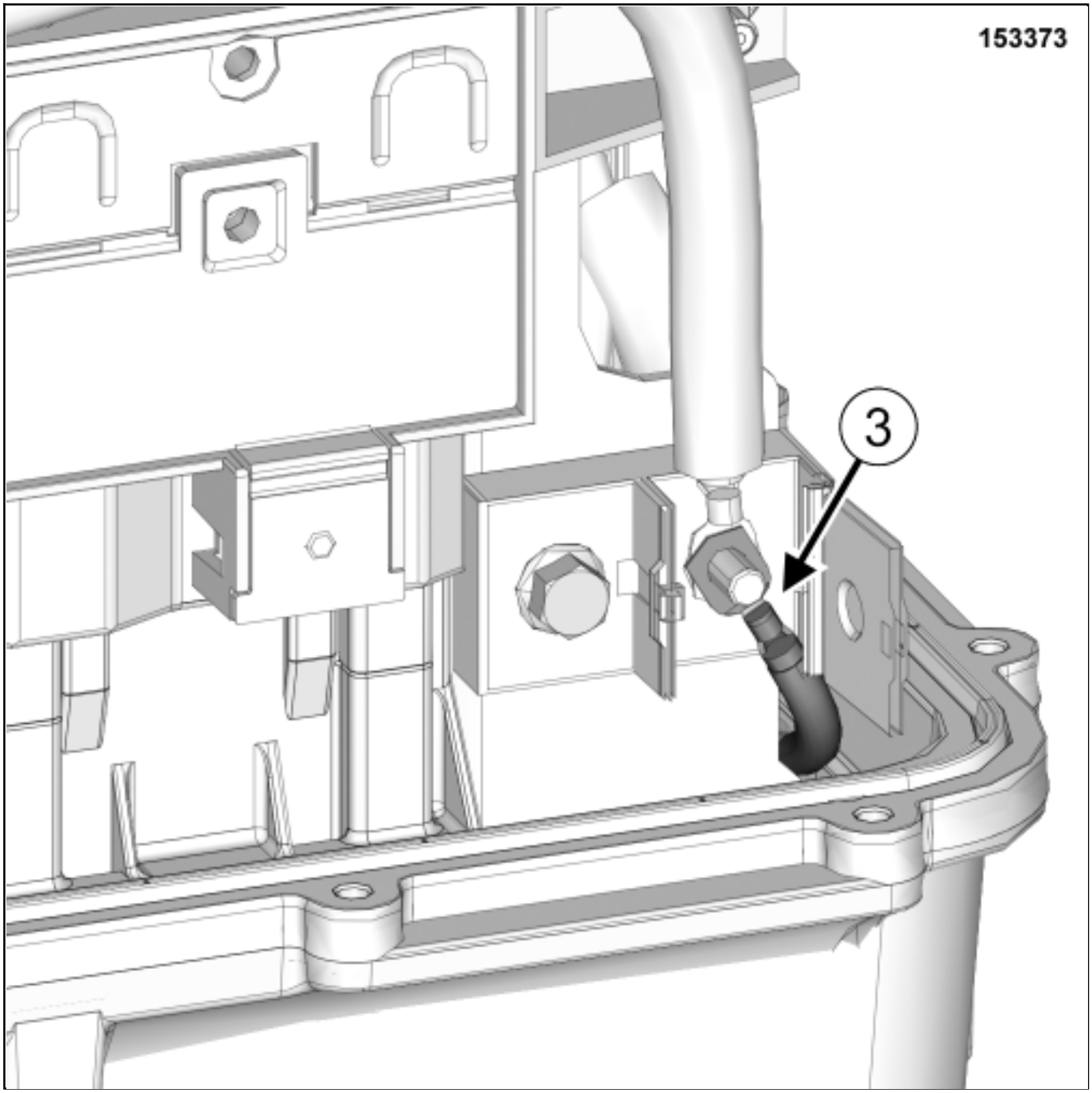

- Move the "+" high voltage charger wire(3) from the "+" terminal.

- Clip the protective cover of the "+" terminal.

- Remove the electric connection nut from the traction battery lower cover using an insulated magnetic H8 socket(see 19E, Traction battery, Traction battery module stack assembly : Exploded view) .

-

Insulate the "-" wire of the low voltage wiring.

Move the "-" high voltage charger wire from the traction battery lower cover.

Remove (see 19E, Traction battery, Traction battery housing assembly : Exploded view) :

- the screws from the high voltage connector between charger and traction battery using H8 socket with a extension,
- the high voltage connector between charger and traction battery.

> Note:
>
> Pay attention to the wires during removal.

REFITTING

1. REFITTING PREPARATION OPERATION

Clean the faces:

- around the connector hole on the traction battery lower cover using the brake cleanerand lint-free cloth Vehicle: Parts and consumables for the repair ,
- on the high voltage connector between charger and traction battery using the lint-free clothVehicle: Parts and consumables for the repair .

> Note:
>
> In case of damage of the seal, replace the high voltage connector between the charger and traction battery.

2. REFITTING OPERATION

❑

Refit the high voltage connector between charger and traction battery(see 19E, Traction battery, Traction battery housing assembly : Exploded view) .

Note:

Pay attention to the wires during refitting.

Refit order of the wires: terminal "-" , interlock, terminal "+" .

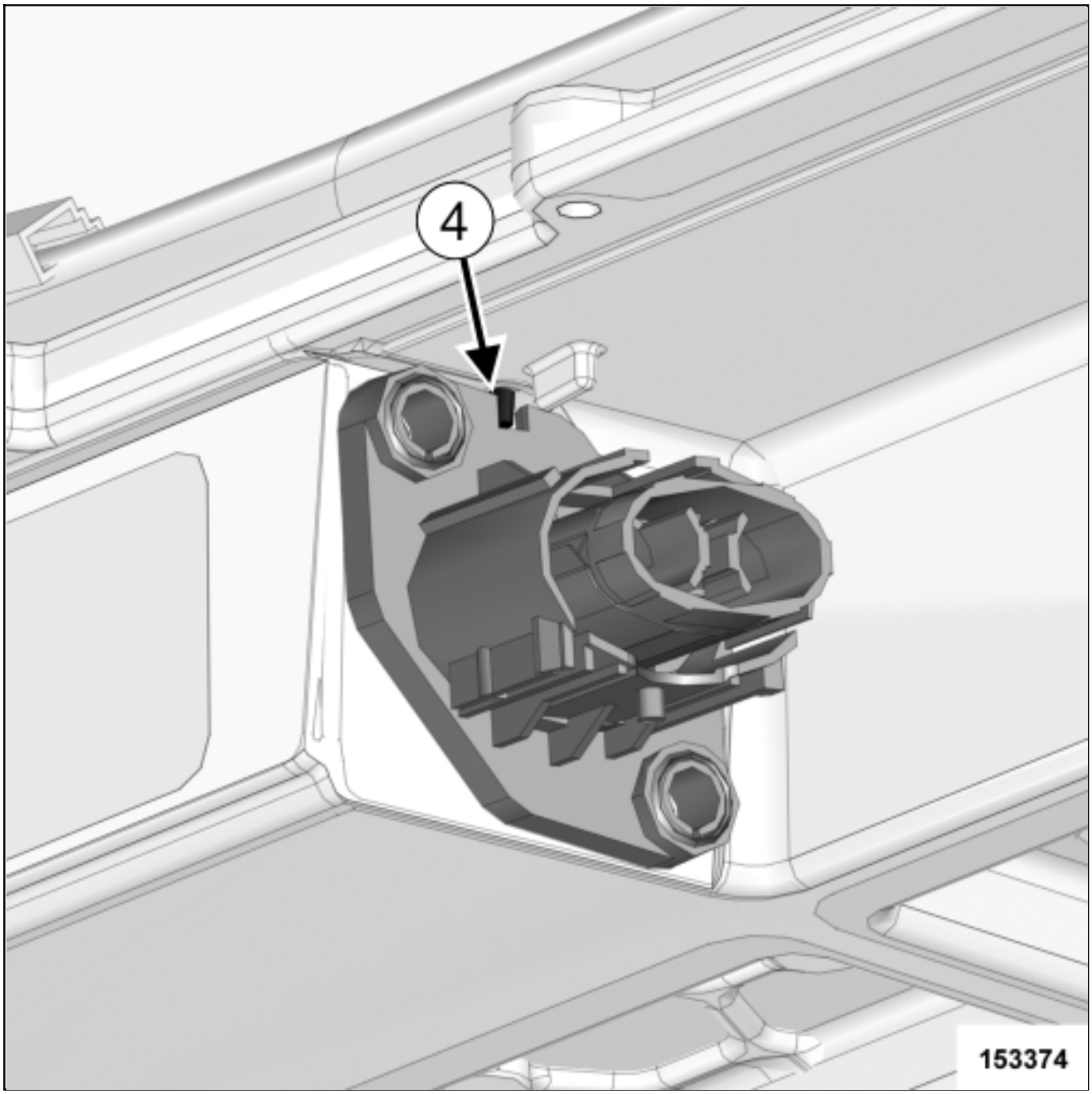

❑

Pay attention to the mechanical coding(4) between the high voltage connector between charger and traction battery socket and the traction battery lower cover.

❑

Refit the screws on the high voltage connector between charger and traction battery using H8 socket with a extension(see 19E, Traction battery, Traction battery housing assembly : Exploded view) .

❑

Torque tighten the screws on the high voltage connector between charger and traction battery using H8 socket with a extension(see 19E, Traction battery, Traction battery housing assembly : Exploded view) .

❑

Mark always screws with a paint markerof a color different from the original.

❑

Connect the high voltage connector between the charger and traction battery interlock plug.

❑

Remove the insulation protection from the "-" high voltage charger wire.

❑

Fit the "-" high voltage charger wire on the traction battery lower cover.

CAUTION

There are two "-" wires on the traction battery lower cover.

❑

Refit the electric connection nut on the traction battery lower cover using an insulated magnetic H8 socket(see 19E, Traction battery, Traction battery module stack assembly : Exploded view) .

❑

Torque tighten the electric connection nut on the traction battery lower cover using an insulated magnetic H8 socket(see 19E, Traction battery, Traction battery module stack assembly : Exploded view) .

❑

Mark always nut with a paint markerof a color different from the original.

- Unclip the protective cover of the "+" terminal using the toolSet of trim removal levers.(Car. 1363) .

- Fit the "+" high voltage charger wire on the "+" terminal.

- Refit the electric connection nut of the "+" terminal using an insulated magnetic H10 socket(see 19E, Traction battery, Traction battery module stack assembly : Exploded view) .

- Torque tighten the electric connection nut of the "+" terminal using an insulated magnetic H10 socket (see 19E, Traction battery, Traction battery module stack assembly : Exploded view) .

- Mark always nut with a paint markerof a color different from the original.

- Clip the protective cover of the "+" terminal.

- Proceed in the reverse order to removal.

IDENTIFICATION OF THE TYRE PRESSURE

Note, one or more warnings are present in this procedure

1. INFLATION

CAUTION

If checking the pressure when hot, increase the tyre inflation pressure by 0.2to 0.3 bar above the recommended pressure.

Engine	Wheel rim	Tyre	Tyre inflation pressure when cold (bar)	
			Front	Rear
3CG	3 J 13	125/80 R13 65M	2.3	2.0
	4.5 J 13	145/80 R13 75M	2.3	2.0

The pressure values given are "motorway" pressures.

Repair-13x05x02x01-02x07-1-30-1.xml

XSL version : 3.02 du 22/07/11

IDENTIFICATION

1. LOCATION OF VEHICLE IDENTIFICATION PLATE (A)

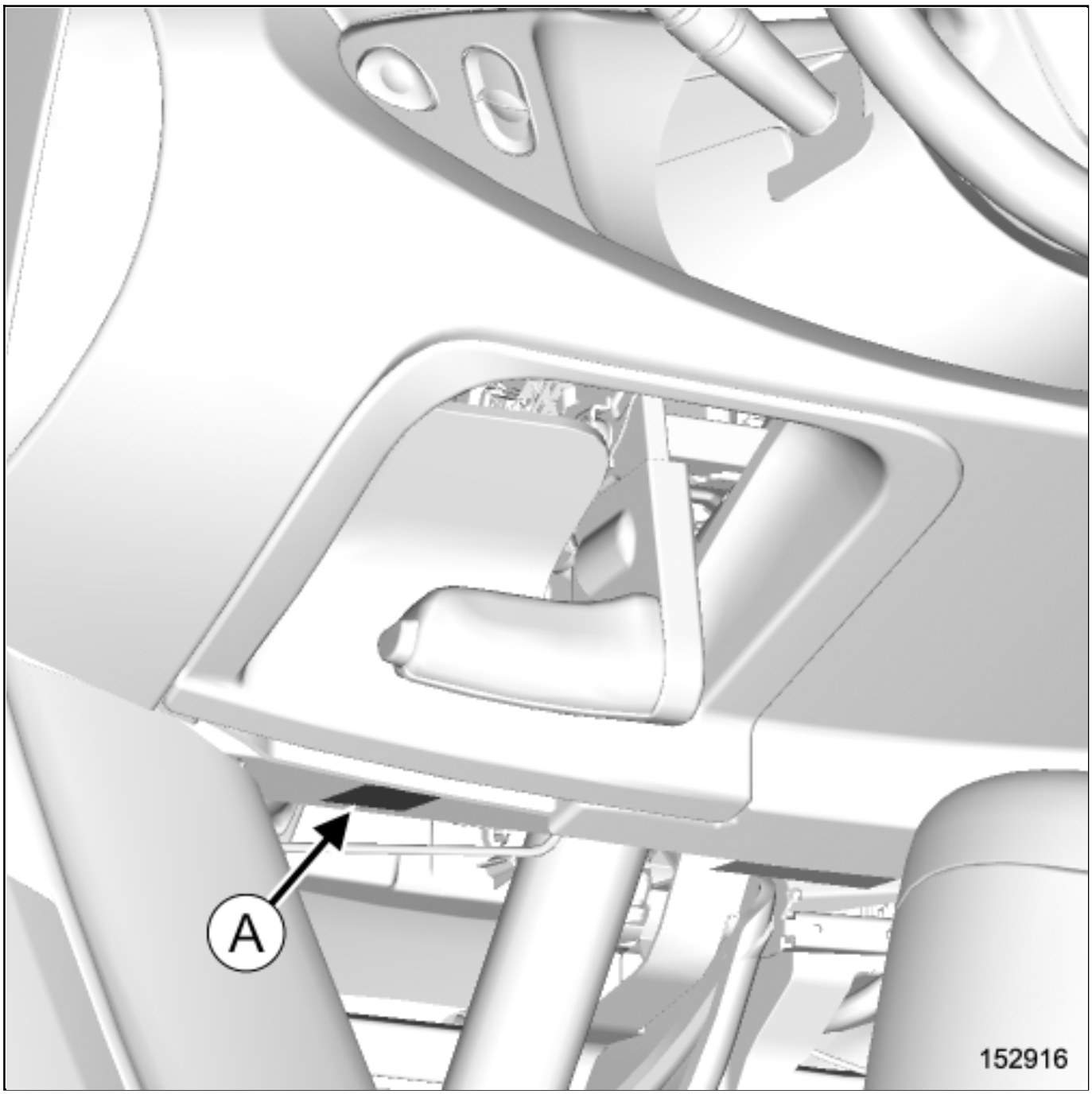

2. DETAILED VIEW OF THE VEHICLE IDENTIFICATION PLATE (A)

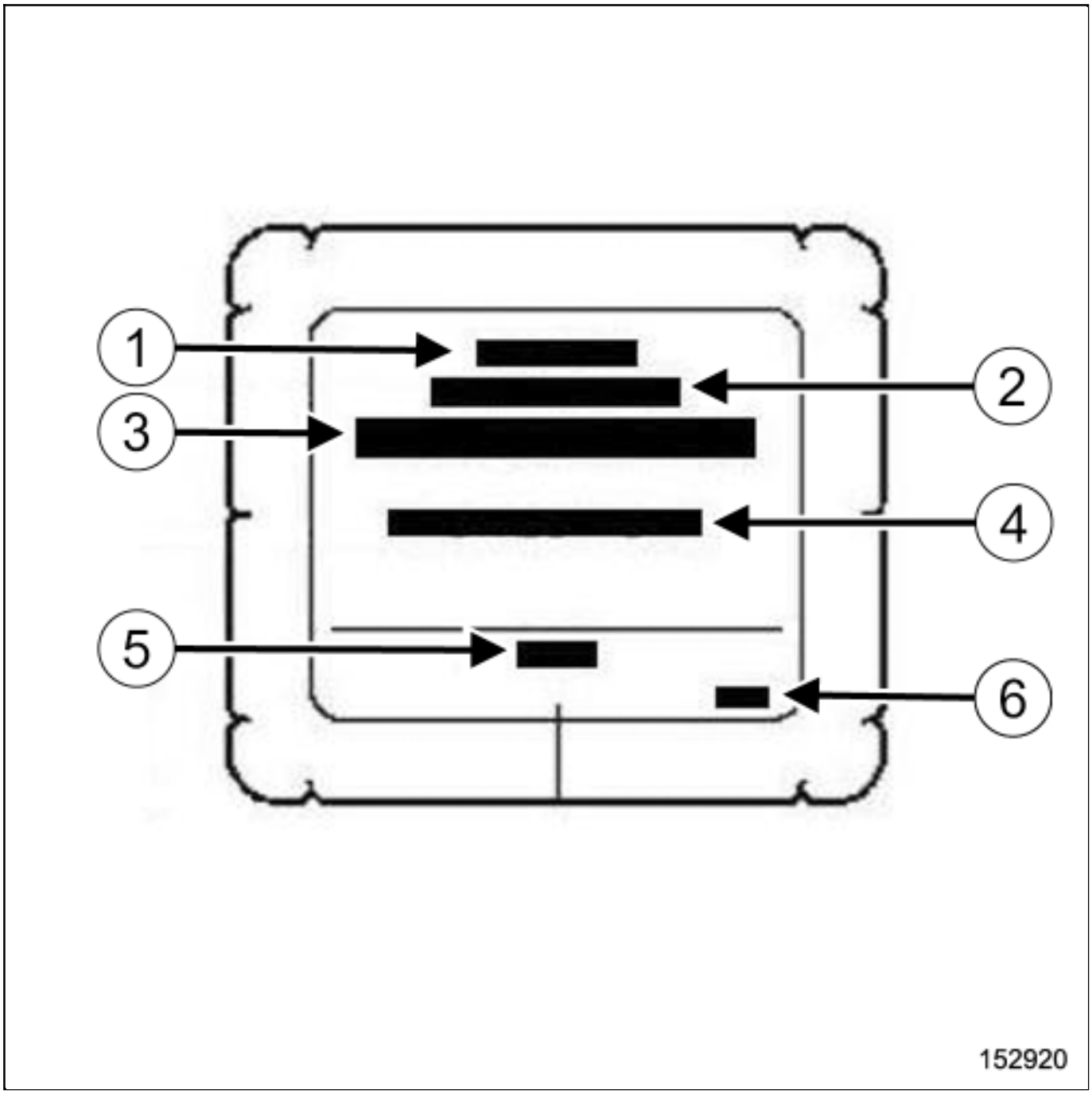

(1) Manufacturer's name

(2) Communty acceptance number or certification number

(3) Identification number

(4) Sound level

(5) Colors

(6) Batch number

3. COLD-MARKING OF THE BODY (B)

Note:

If the complete body is being replaced, it must be marked in compliance with the current regulations.

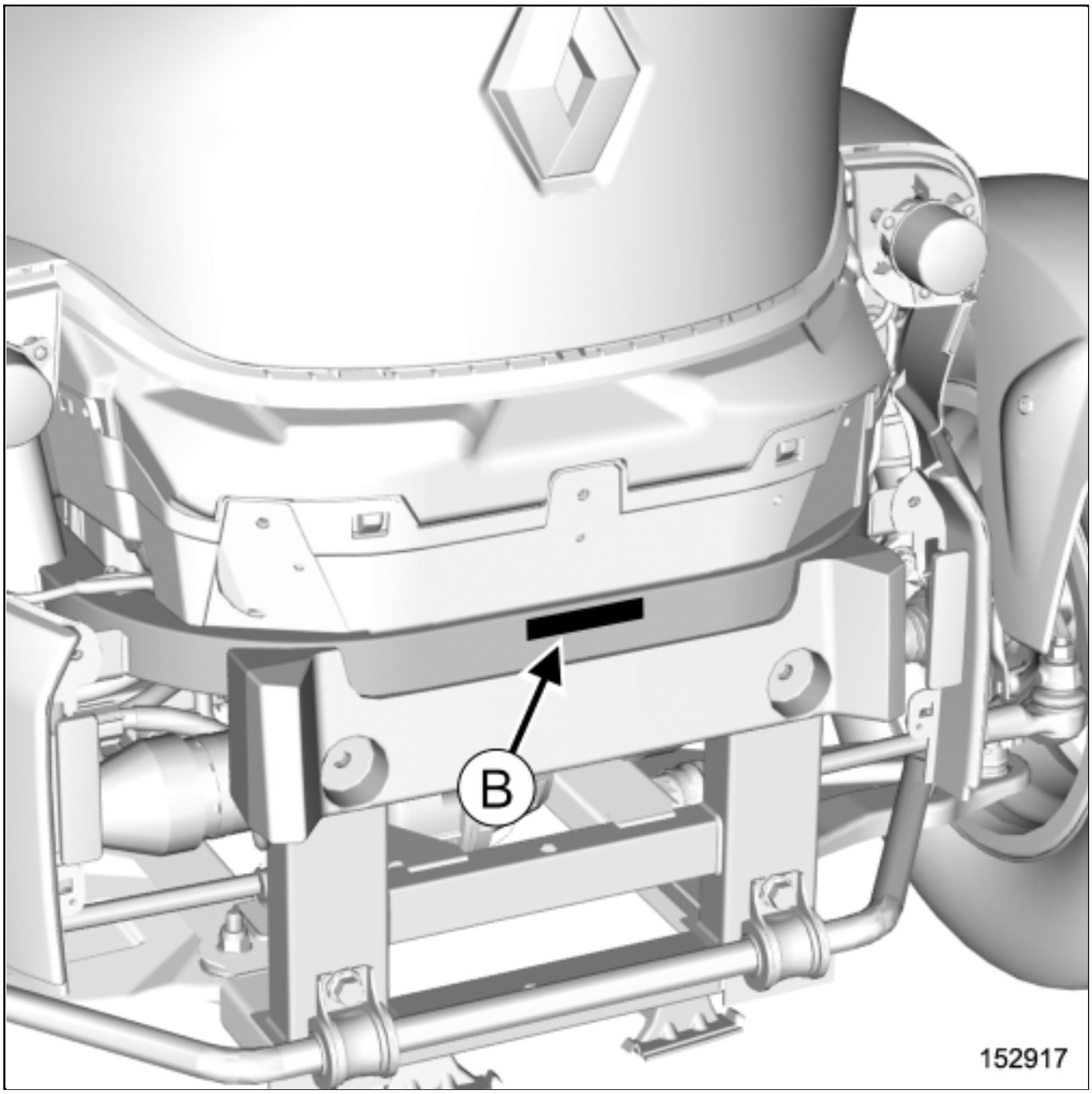

IGNITION SWITCH: REMOVAL - REFITTING

Note, one or more warnings are present in this procedure

Equipment required
Diagnostic tool

parts always to be replaced:
Ignition switch bolt

WARNING

To avoid all risk of damage to the systems, apply the safety and cleanliness instructions and operation recommendations before carrying out any repair:

Vehicle: Precautions for the repair .

REMOVAL

1. REMOVAL PREPARATION OPERATION

WARNING

To avoid any risk of triggering when working on or near a pyrotechnic component (airbags or pretensioners), lock the airbag computer using the diagnostic tool.

When this function is activated, all the trigger lines are inhibited and the airbag warning light on the instrument panel lights up continuously (ignition on).

Lock the airbag computer using the Diagnostic tool(see Fault finding - Replacement of components) (88C,

Airbags and pretensioners).

WARNING

DANGER : Risk of serious injuries due to the short-circuiting or the untimely triggering of an electrical system (pyrotechnical parts, windscreen wiper motor, electric fan, etc.) following possible loopback of the 12-volt supply circuit by the voltage transformer.

Please adhere to the instructions regarding cut-off of the 12-volt supply circuit.

If the procedure fails, do not continue with your task and ask an employee who is qualified and authorized to work on a high-voltage onboard network to perform a diagnostic Vehicle: Precautions for the repair .

Disconnect the 12V supply circuit12 V supply circuit : Lockout - Removal of lockout .

Remove:

- the driver's frontal airbagDriver's frontal airbag: Removal - Refitting ,
- the steering wheelSteering assembly: Exploded view ,
- the steering wheel coverDashboard assembly: Exploded view .
- the rotary switchDashboard assembly: Exploded view .

1- WHEN REPLACING THE IGNITION SWITCH

Remove the transponder ring(see 82A, Engine immobiliser, Transponder ring: Removal - Refitting) .

2. REMOVAL OPERATION

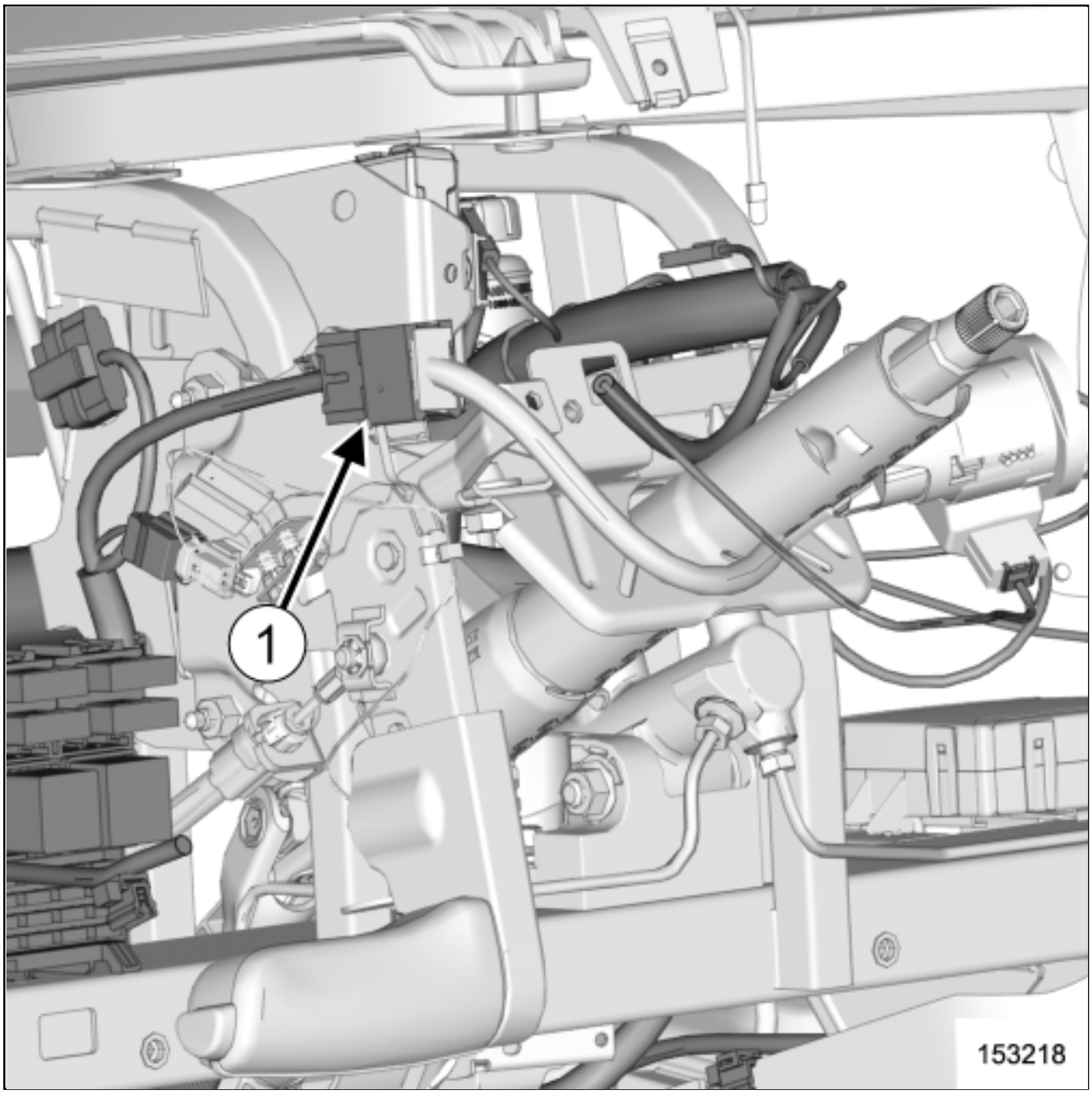

- Disconnect the ignition switch connector(1) .

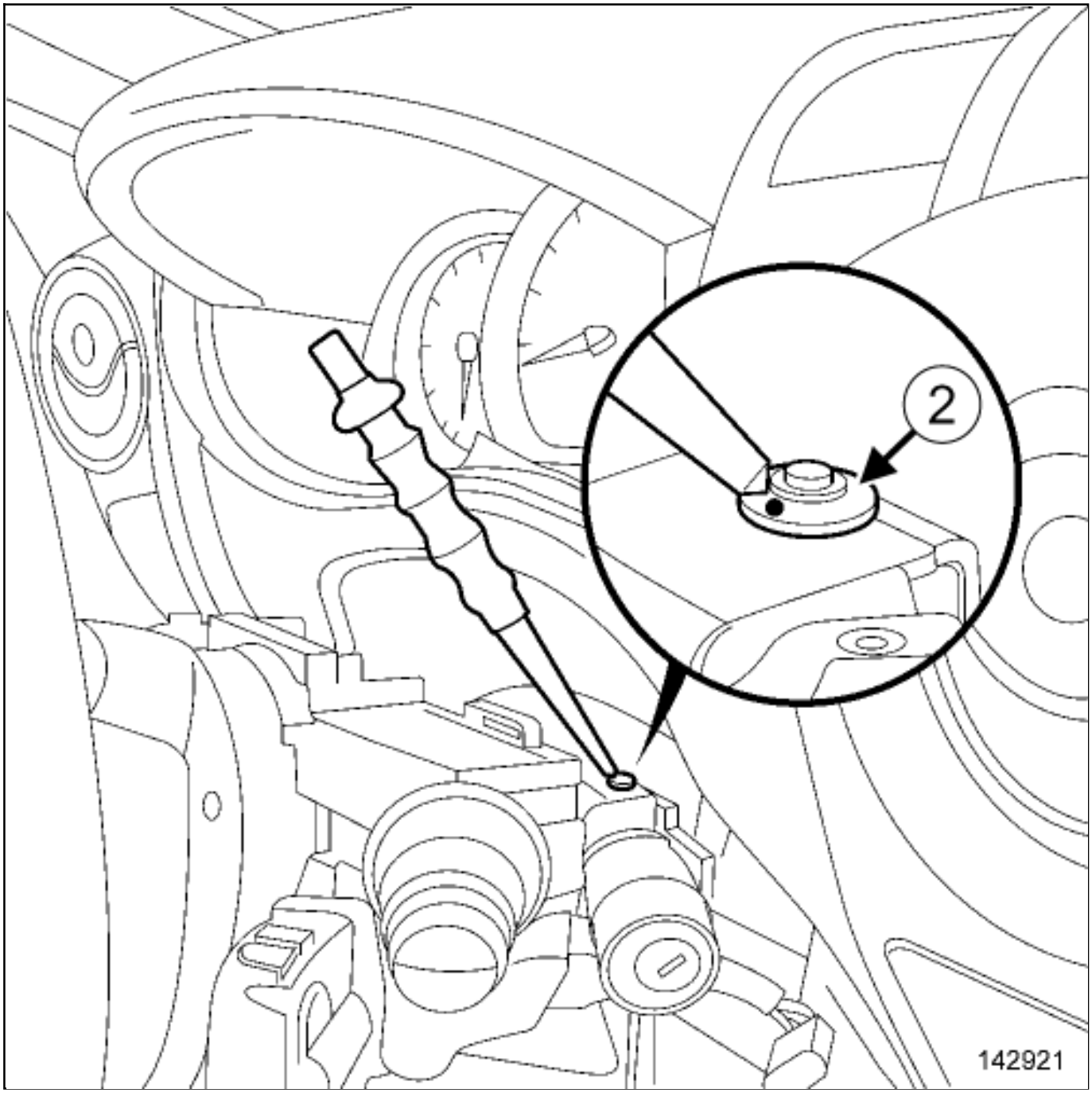

- Remove the shear bolt(2) using a punch.

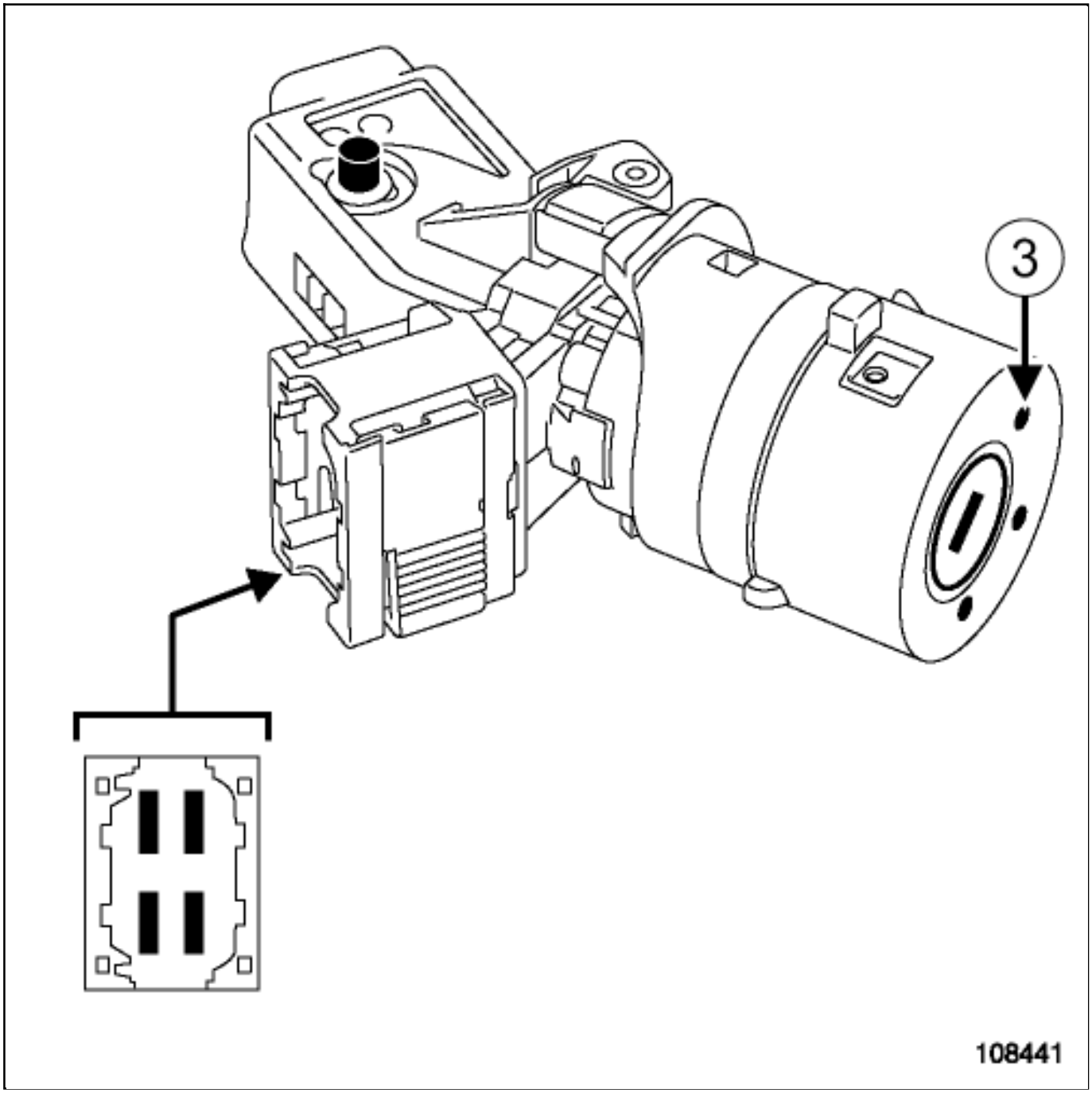
3
108441

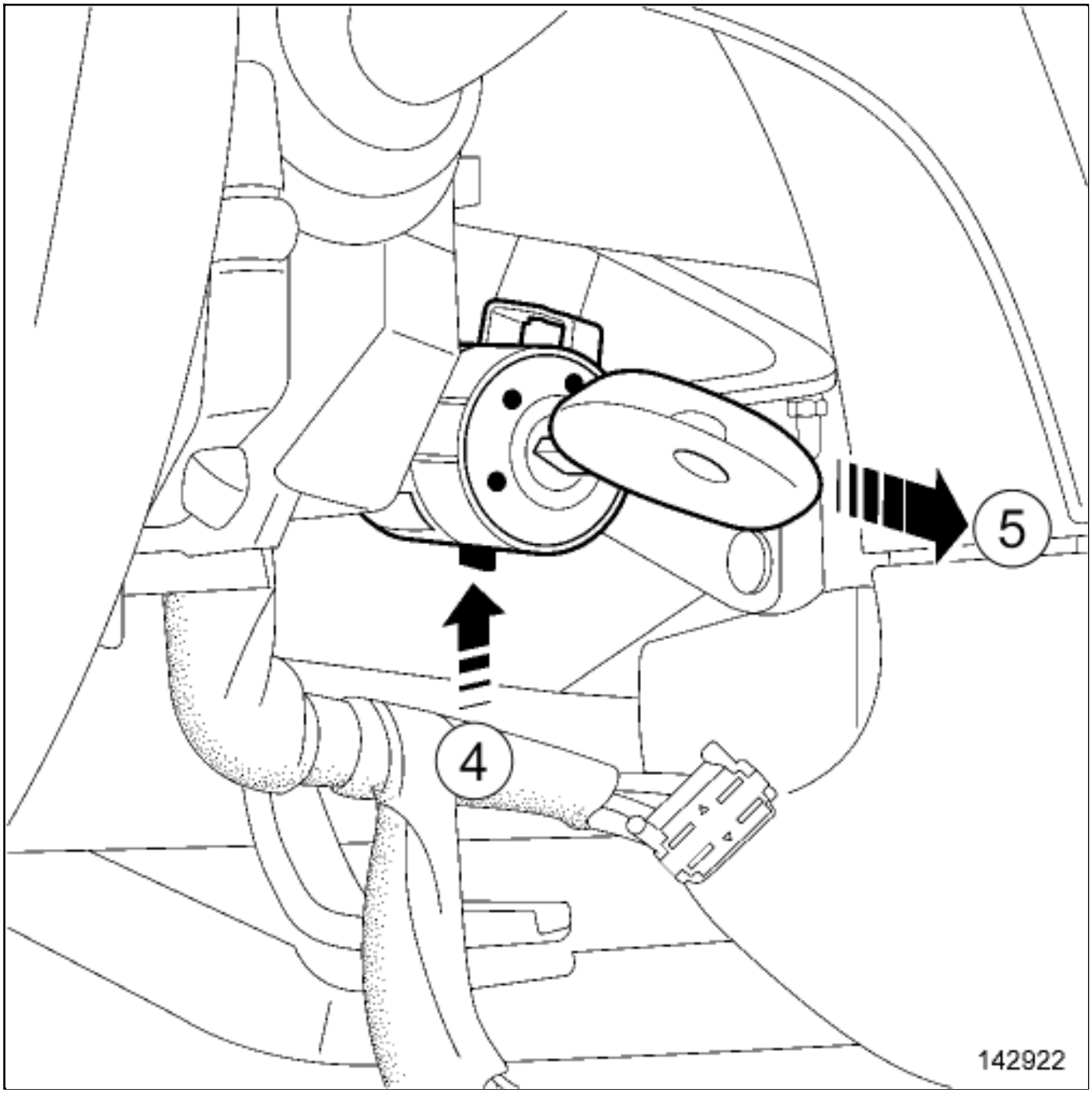

- Position the ignition key to a position another than position "0"(3) .
- Press the retaining lug at(4) .
- Remove the ignition switch at(5) .

REFITTING

1. REFITTING PREPARATION OPERATION

-

parts always to be replaced: Ignition switch bolt .

2. REFITTING OPERATION

> Note:
>
> To protect against tampering, always secure the ignition switch with a shear bolt.
>
> Be sure to recover the sheared-off part of the bolt after it has been tightened.

-

  Position the ignition key to a position another than position "0".

-

  Press the retaining lug.

-

  Fit the ignition switch.

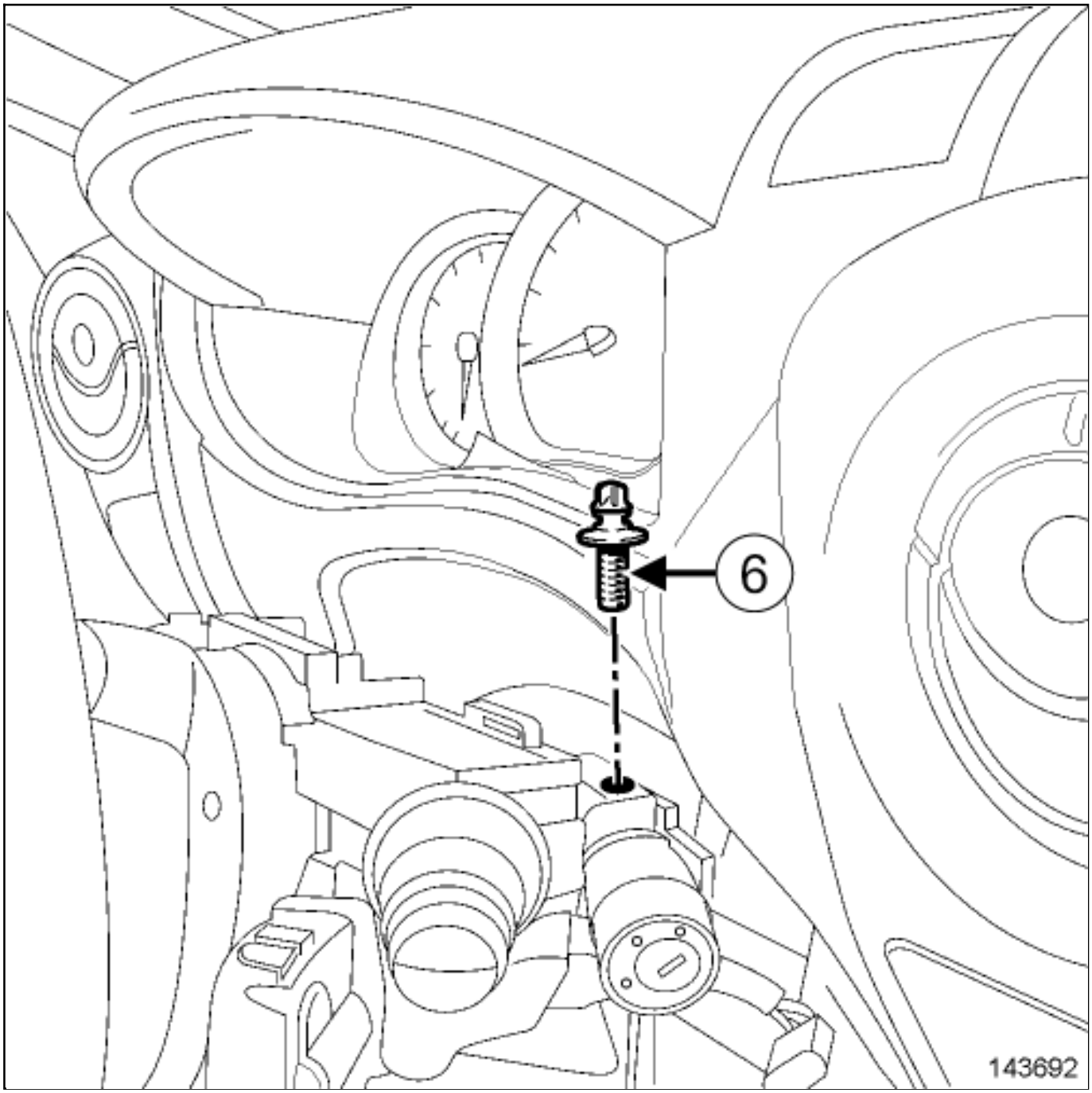

- Tighten the shear bolt(6) until the bolt head shears off.
- Connect the ignition switch connector.
- Lock the ignition switch connector.

3. FINAL OPERATION

- Proceed in the reverse order to removal.

- Connect the 12V supply circuit12 V supply circuit : Lockout - Removal of lockout .

- Unlock the airbag computer using the Diagnostic tool(see Fault finding - Replacement of components) (88C, Airbags and pretensioners).

Repair-30x04x04x04-01x37-1-20-1.xml

XSL version : 3.02 du 22/07/11

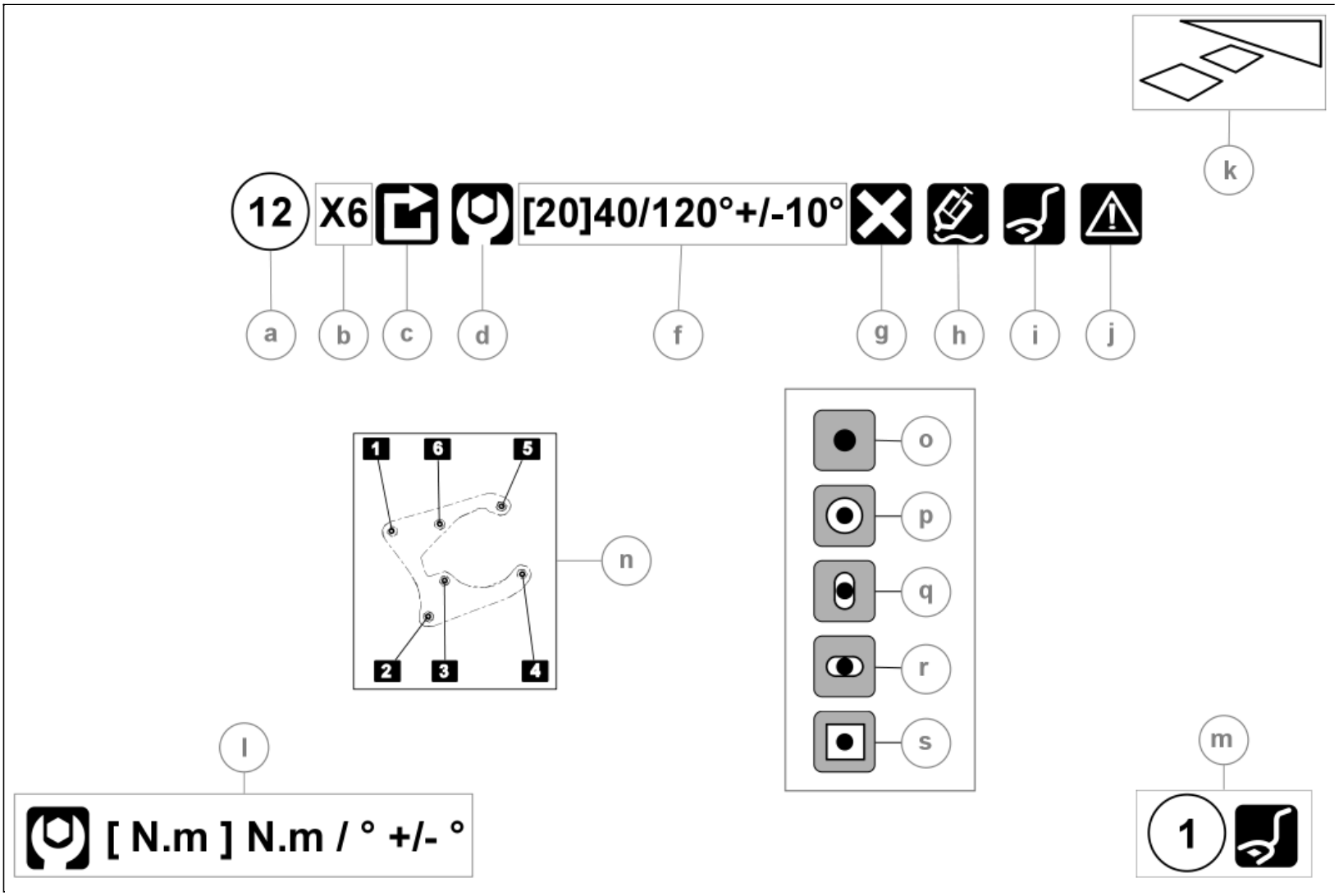

LEGEND FOR ICONS

a	No.
b	Part number
c	A tightening order must be respected
D	Non-standard tightening torque / angle
f	[Initial torque] tightening torque / tightening angle +/- tightening angle tolerance
g	Part always to be replaced
h	Product / Consumable
i	Special tooling / Equipment required
j	Safety precaution
k	Front of the vehicle
l	Tightening units
m	Special tooling / Equipment required to use on all of the assembled parts
n	Tightening order to be respected

The following icons represent the adjustment possibilities for the bodywork components:

- the black dot in the centre represents the body of the bolt,

- the grey section represents the component to be adjusted,

- the white section represents the adjustment area.

o	No adjustment possible
p	Adjustment possible along all axis
q	Adjustment possibly only along vertical axis
r	Adjustment possibly only along horizontal axis
s	Adjustment possible along all axis

IMPACTFAULTFINDING:DESCRIPTION

1.INTRODUCTION

- Before undertaking bodywork repairs on a vehicle, carry out a series of checks in order to determine:
  - firstly, whether the vehicle's road holding and behaviour has been affected by the impact,
  - the type of equipment to use according to the deformity found on the subframe,
  - the parts to order for the repairs.

The checks consist of examining the vehicle structure in order to detect any significant crumpling or blistering.

2. VISUAL INSPECTION OF THE UPPER STRUCTURE

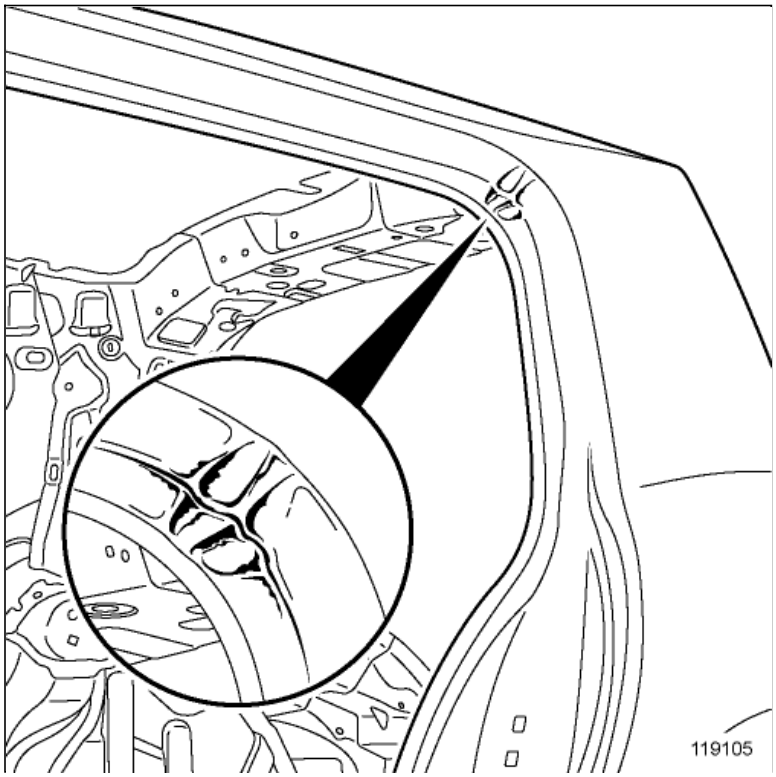

With the vehicle on the ground, check the edge clearances of the opening elements and remove the door entry seals to check for any damage to the door frame angles.

3. VISUAL INSPECTION OF THE SUBFRAME

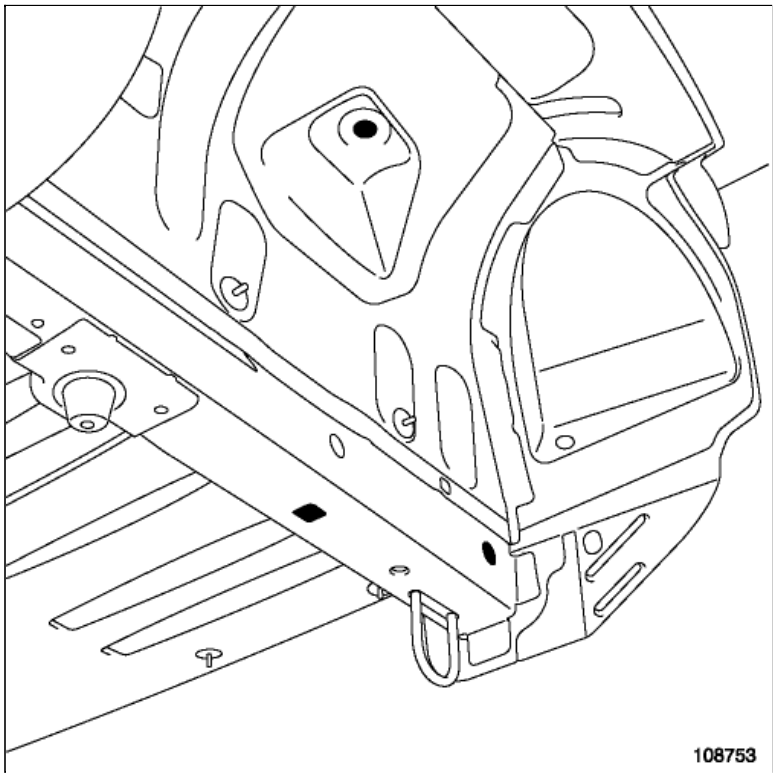

It is preferable to position the vehicle on a two-post lift and examine the side members around the original crumple zones, mechanical component mountings (engine, gearbox, subframe, shock absorber cups) and then the floors.

Note:

- For small impacts or "contentious" impacts, the subframe check may be supplemented by:
  - a comparison measurement using a mechanical gauge,
  - a three-dimensional measurement with an expert report (be sure to measure several points on the component being checked in order to reveal the tendency for deformation, to confirm the fault finding), followed by a check of the axle assemblies before any repairs, on a special 4-post lift.

For impacts to the wheels without any visible structural damage, begin fault finding by checking the axle geometry, after having replaced the damaged wheels.

4. CHECKING THE SUBFRAME USING A MEASURING TOOL

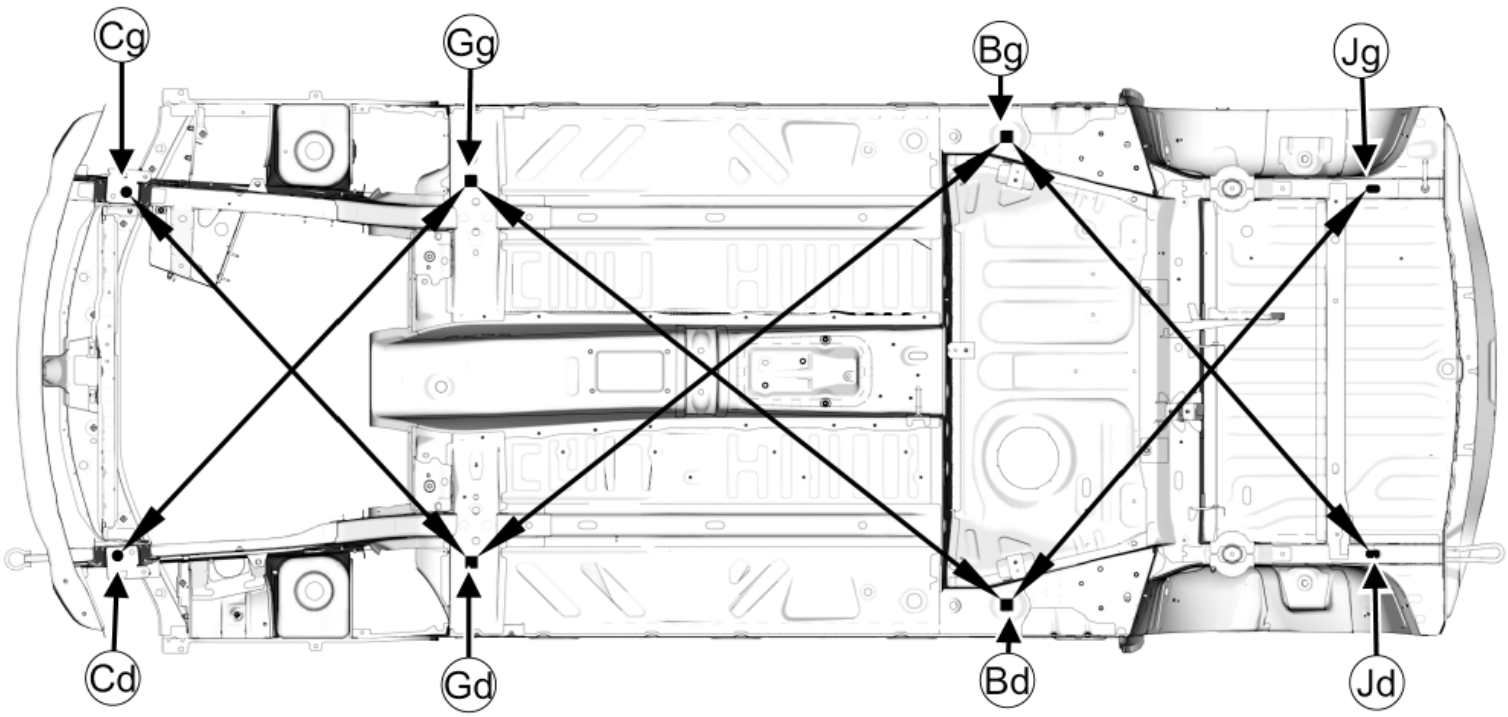

125996

Chronological order of checks:

Front impact

(Bg) - (Gd) = (Bd) - (Gg)

(Bg) - (Jd) = (Bd) - (Jg)

Rear impact

(Bg) - (Gd) = (Bd) - (Gg)

(Gg) - (Cd) = (Gd) - (Cg)

5. TYPE OF REPAIRS

Three main categories:

- cosmetic damage only: dent removal without the need for jacking,
- damage with slight deformation of the end of a side member requiring some jacking, without risk to the vehicle's road holding,
- damage with deformation of the subframe geometry likely to have affected the vehicle's road holding(see 40A, General information, Straightening a component: Description) .

Note:

The indications necessary for identifying the points on the subframe which affect the vehicle's road holding are given in the MR for each vehicleStructural components to be positioned on the repair bench: Description .

INPUT SHAFT : REMOVAL - REFITTING

Note, one or more warnings are present in this procedure

Equipment required
safety strap(s)
compressed air nozzle

WARNING

To avoid all risk of damage to the systems, apply the safety and cleanliness instructions and operation recommendations before carrying out any repair:

Vehicle: Precautions for the repair .

Location and specification (tightening torques, parts always to be replaced, etc.)Electric traction reduction gearing assembly: Exploded view .

REMOVAL

1. REMOVAL PREPARATION OPERATION

Position the vehicle on a two-post liftVehicle: Towing and lifting .

WARNING

DANGER: HIGH VOLTAGE VEHICLE.

Risks of serious burns or electric shock that may prove fatal.

Before carrying out any work on the vehicle, it is essential that you adhere to the instructions regarding vehicle voltage cut-off. This work must be carried out by an employee who is qualified and authorized to work on a high-voltage onboard network Vehicle: Precautions for the repair .

Remove:

- the lockout of the vehicle Vehicle: Lockout - Removal of lockout ,
- the rear wheels Wheel: Removal - Refitting ,
- the rear bumper trim Exterior body rear trim assembly: Exploded view .

Blow the traction motor and the reducer with a compressed air nozzle to prevent the introduction of foreign bodies in the motor.

Remove:

- the rear driveshaft Driveshaft assembly: Exploded view ,
- the "lifting eye - wiring support" on the reducer Electric traction reduction gearing assembly: Exploded view .

Strap the traction motor to the body with a safety strap(s).

Remove:

- the left-hand suspended engine mounting Engine-gearbox unit support assembly: Exploded view ,

- the reducer Electric traction reduction gearing assembly: Exploded view ,
- the input shaft lip seal Input shaft lip seal : Removal - Refitting ,
- the differential output seal Differential output seal : Removal - Refitting ,
- the mechanism housing (see 23C, Reduction gear, Mechanism housing : Removal - Refitting) .

2. REMOVAL OPERATION

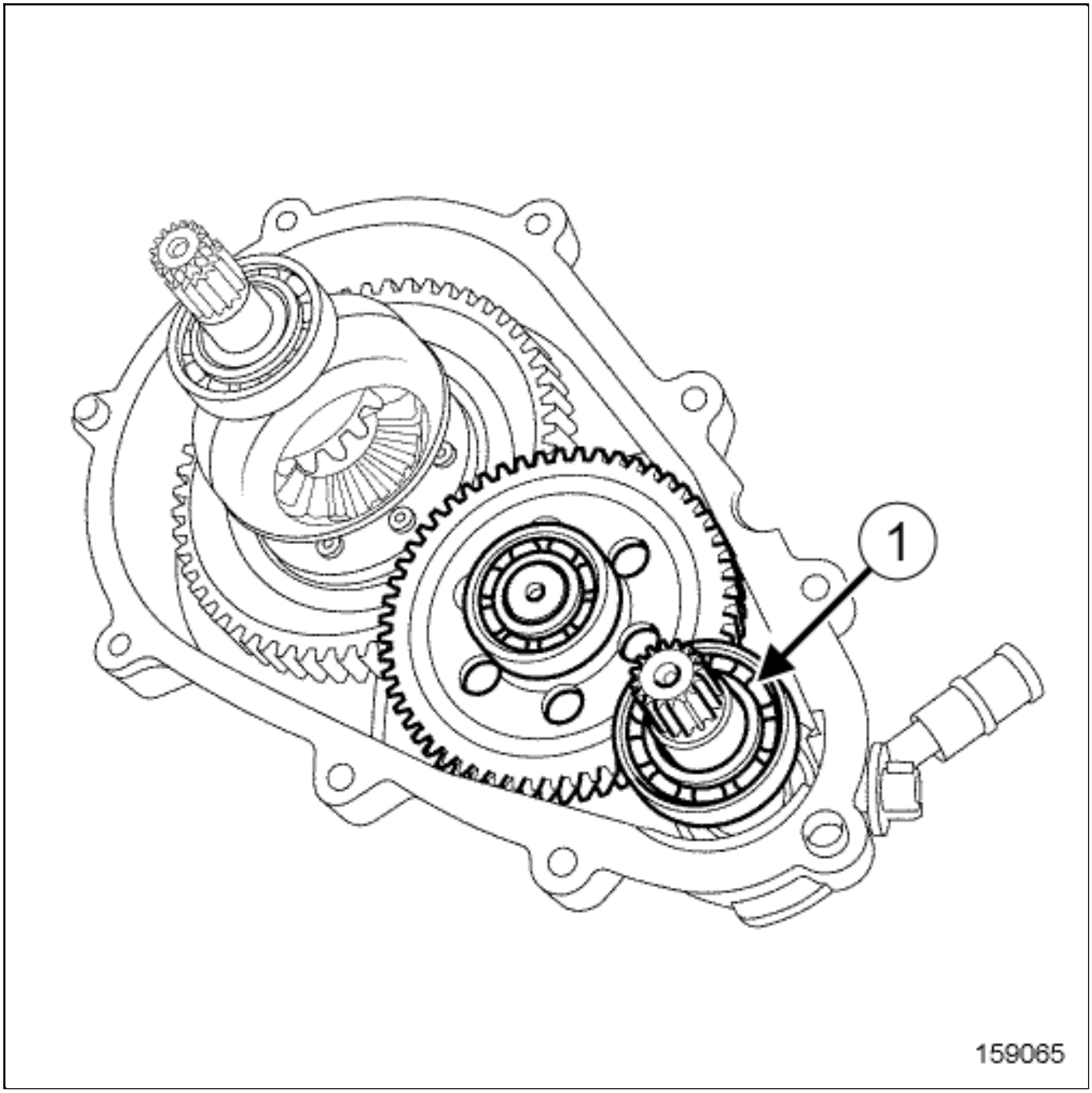

- Remove the "input shaft - output shaft" assembly from the reducer.

- Separate the input shaft(1) from the output shaft.

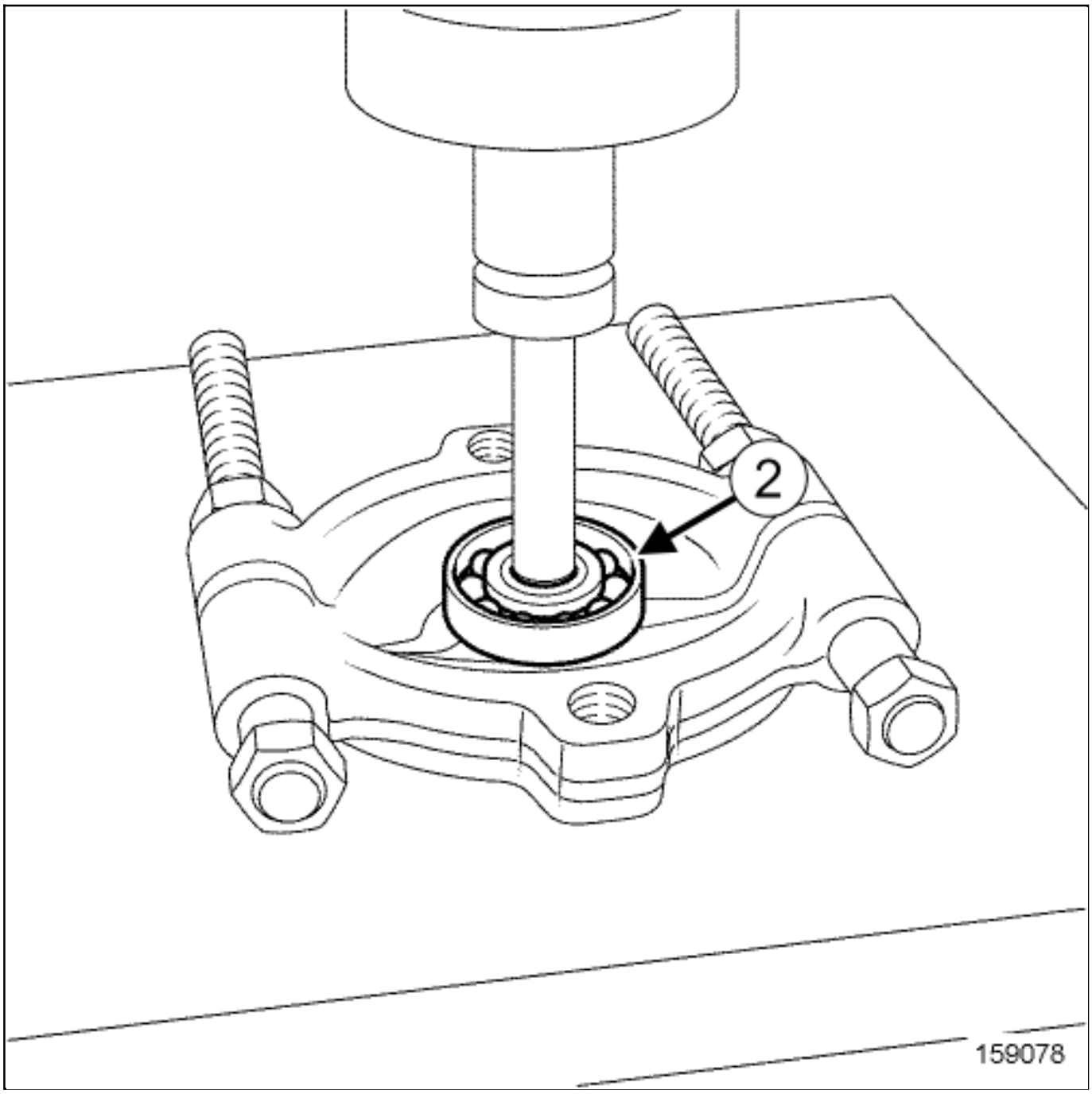

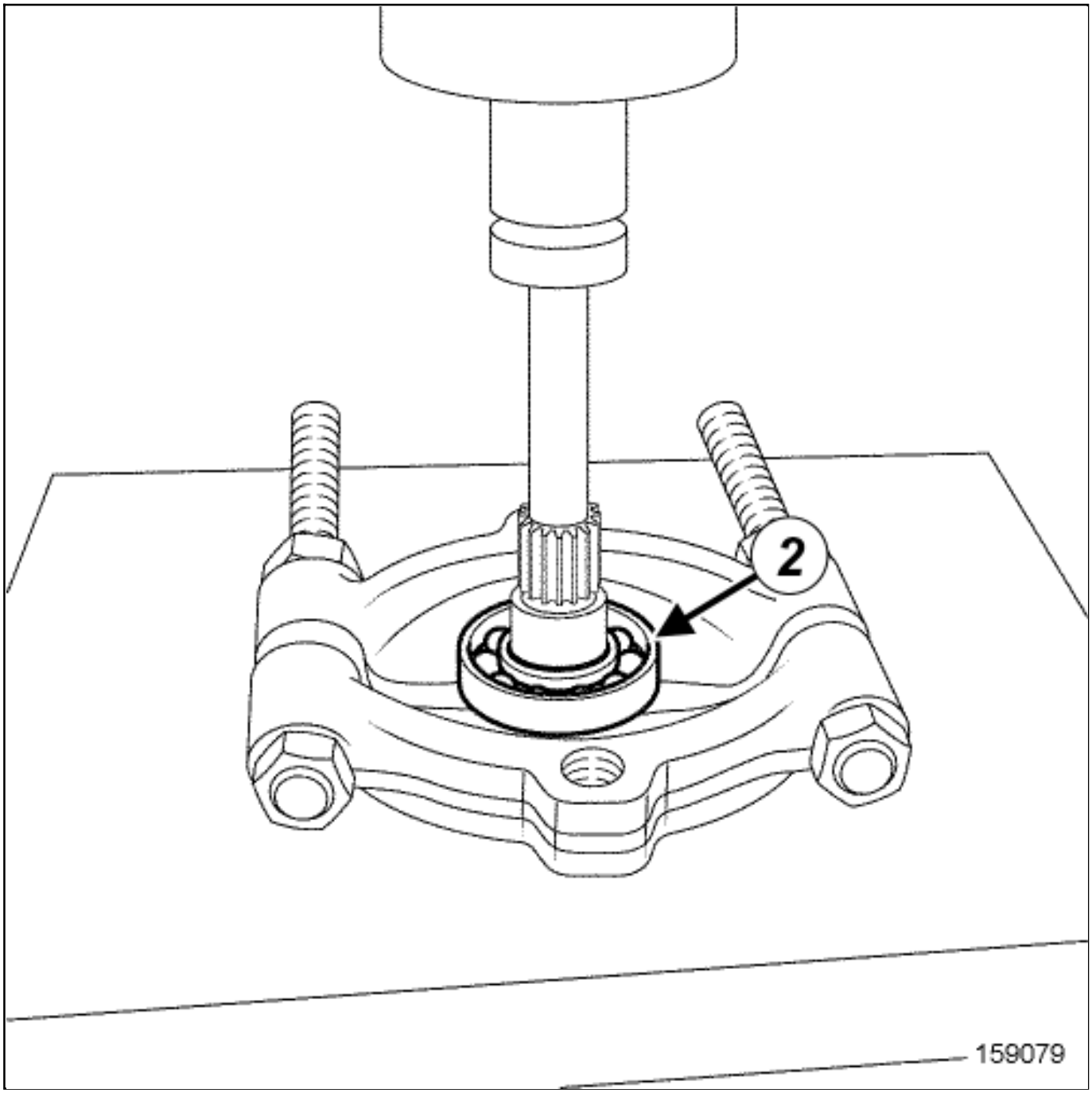

Remove the bearings(2) with a press, applying pressure with a tube.

REFITTING

1. REFITTING PREPARATION OPERATION

Use surface cleanerVehicle: Parts and consumables for the repair to clean:

- the internal and external surfaces of the bearing, in contact with the input shaft,
- the input shaft surfaces in contact with the bearing.

CAUTION

Do not press the bearing's internal bush so as to avoid damaging the bearing (very high shrink-fitting force).

Replace any component whose contact surfaces have deep scratches or cracks.

2. REFITTING OPERATION

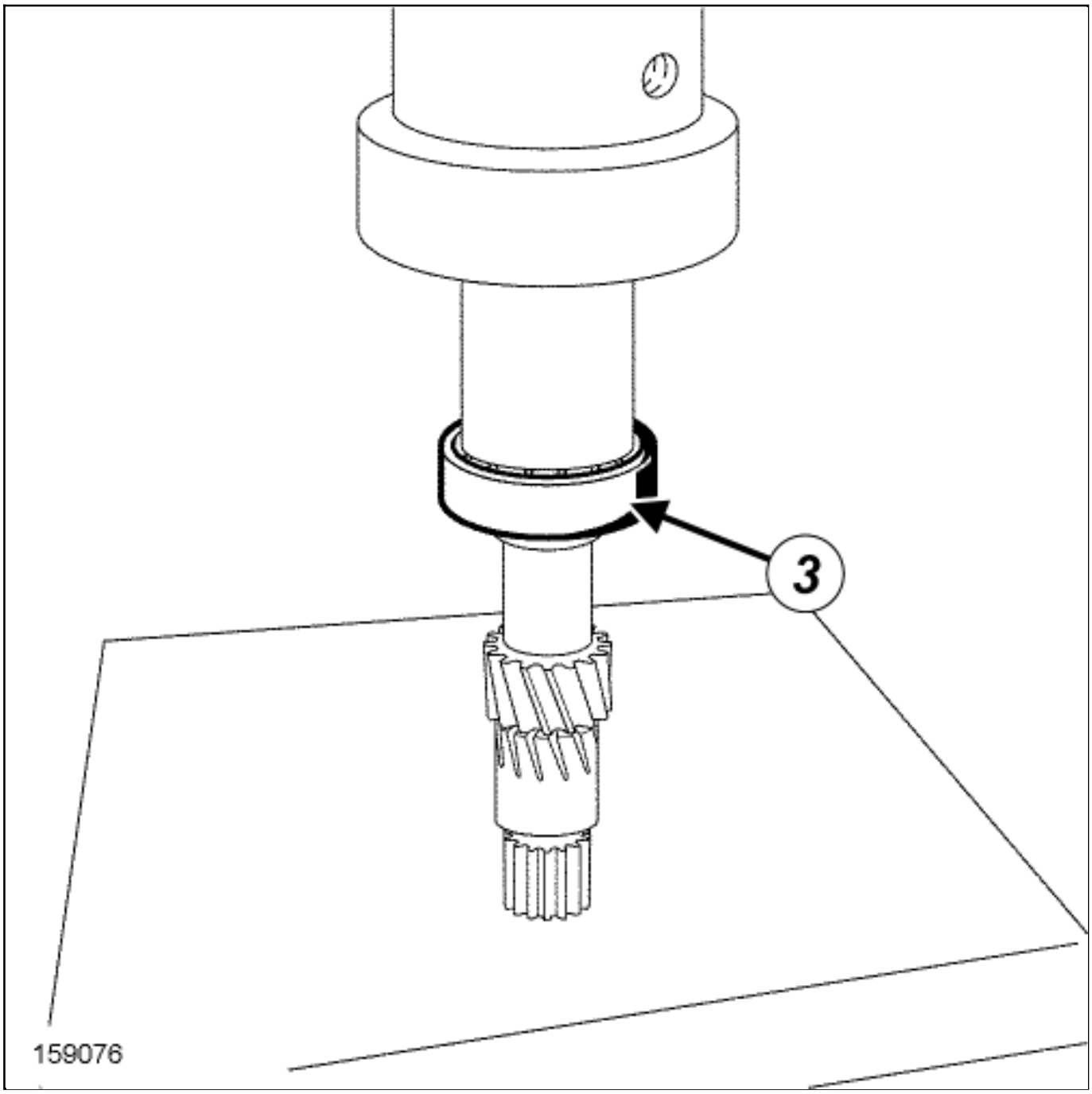
3
159076

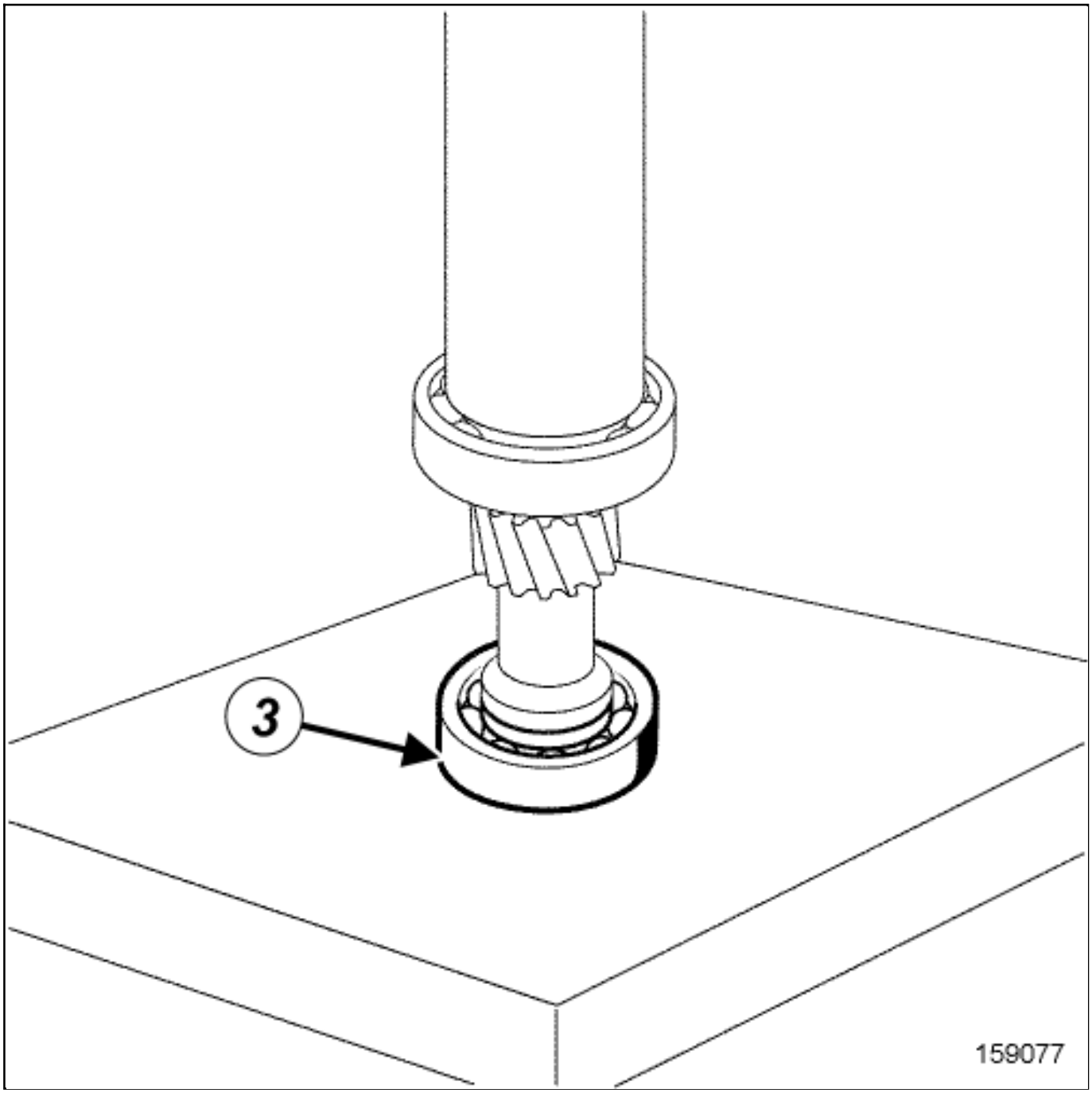

Refit the bearings(3) with a press, applying pressure with a tube.

3. FINAL OPERATION

Proceed in the reverse order to removal.

XSL version : 3.02 du 22/07/11

INPUT SHAFT LIP SEAL : REMOVAL - REFITTING

Note, one or more warnings are present in this procedure

Special tooling required	
Tool for fitting primary shaft seal	Bvi. 2015

Equipment required
safety strap(s)
compressed air nozzle
roll pin punch

WARNING

To avoid all risk of damage to the systems, apply the safety and cleanliness instructions and operation recommendations before carrying out any repair:

Vehicle: Precautions for the repair .

Location and specification (tightening torques, parts always to be replaced, etc.)(see 23C, Reduction gear, Electric traction reduction gearing assembly: Exploded view) .

REMOVAL

1. REMOVAL PREPARATION OPERATION

Position the vehicle on a two-post lift Vehicle: Towing and lifting .

WARNING

DANGER: HIGH VOLTAGE VEHICLE.

Risks of serious burns or electric shock that may prove fatal.

Before carrying out any work on the vehicle, it is essential that you adhere to the instructions regarding vehicle voltage cut-off. This work must be carried out by an employee who is qualified and authorized to work on a high-voltage onboard network Vehicle: Precautions for the repair .

Remove the lockout of the vehicleVehicle: Lockout - Removal of lockout .

Remove:

- the rear wheelsWheel: Removal - Refitting ,
- the rear bumper trimExterior body rear trim assembly: Exploded view .

Blow the traction motor and the reducer with a compressed air nozzleto prevent the introduction of foreign bodies in the motor.

Remove:

- the rear driveshaftDriveshaft assembly: Exploded view ,
- the "lifting eye - wiring support" on the reducer(see 23C, Reduction gear, Electric traction reduction gearing assembly: Exploded view) .

Strap the traction motor to the body with a safety strap(s).

Remove:

- the left-hand suspended engine mounting Engine-gearbox unit support assembly: Exploded view ,
- the reducer (see 23C, Reduction gear, Electric traction reduction gearing assembly: Exploded view) .

2. REMOVAL OPERATION

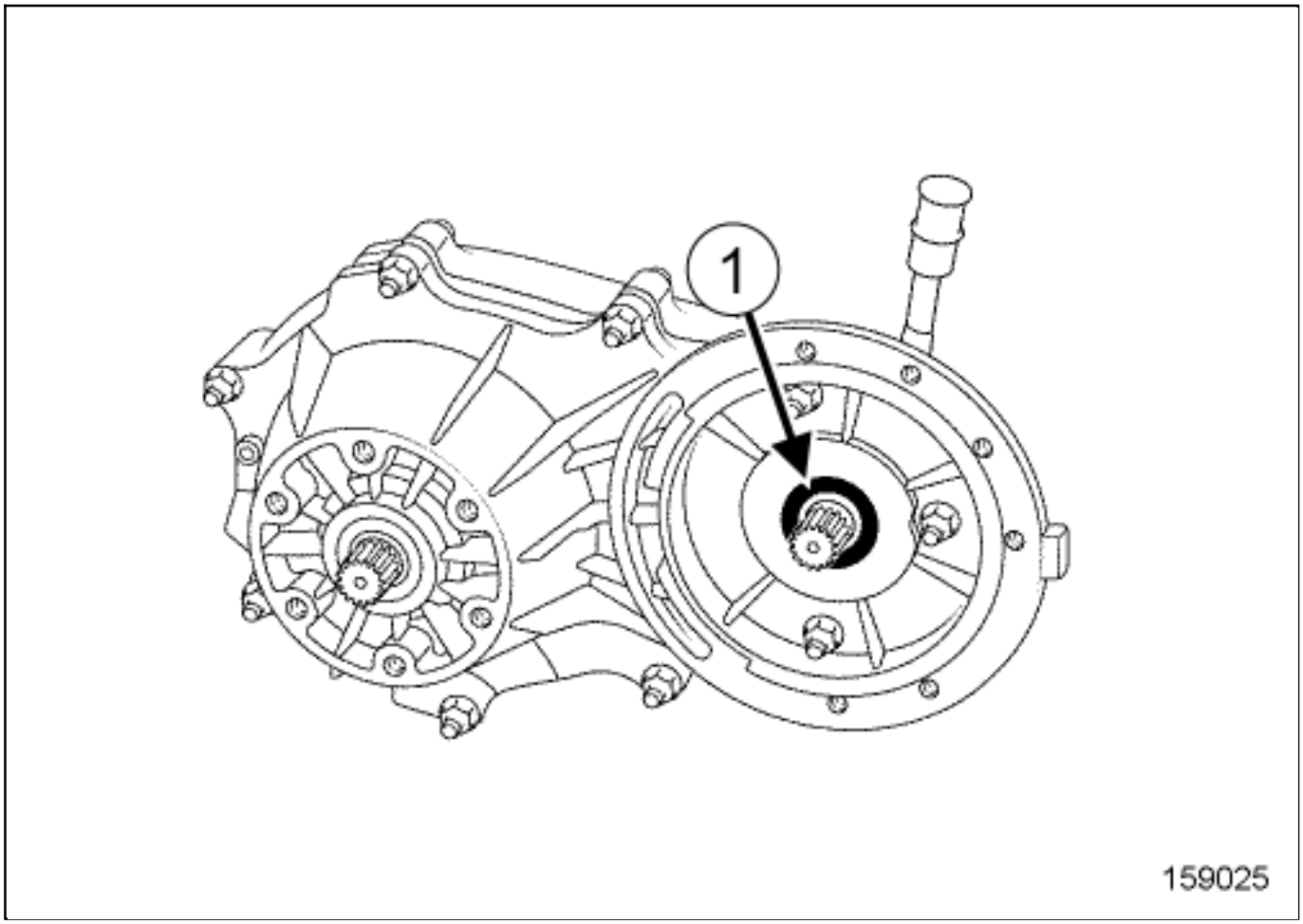

- Tap the base of the input shaft lip seal(1) using a roll pin punch and a small hammer to detach it and rotate it in its housing.

- Remove the input shaft lip seal(1) with a screwdriver.

REFITTING

1. REFITTING PREPARATION OPERATION

- Part always to be replaced : input shaft lip seal.

2. REFITTING OPERATION

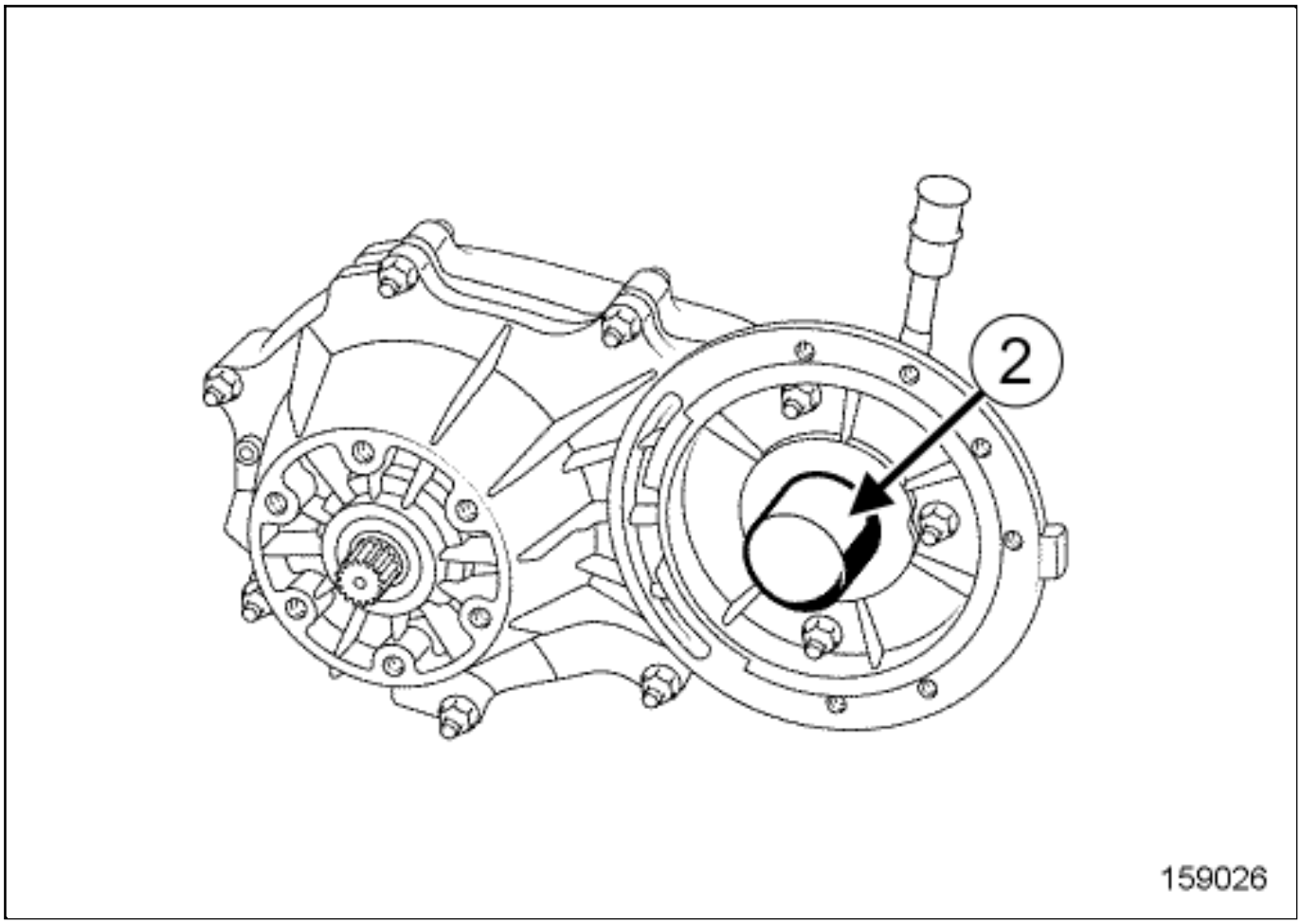

- Lubricate the internal surface of the new input shaft lip seal.
- Fit the new input shaft lip seal on the toolTool for fitting primary shaft seal(Bvi. 2015) (2) .
- Tap the toolTool for fitting primary shaft seal(Bvi. 2015) with a copper hammer to fit the new input shaft lip seall fully.

3. FINAL OPERATION

Proceed in the reverse order to removal.

Repair-14x01x05x13-01x37-1-1-1.xml

XSL version : 3.02 du 22/07/11

INPUT SHAFT : REMOVAL - REFITTING

Note, one or more warnings are present in this procedure

Equipment required
safety strap(s)
compressed air nozzle

WARNING

To avoid all risk of damage to the systems, apply the safety and cleanliness instructions and operation recommendations before carrying out any repair:

Vehicle: Precautions for the repair .

Location and specification (tightening torques, parts always to be replaced, etc.)Electric traction reduction gearing assembly: Exploded view .

REMOVAL

1. REMOVAL PREPARATION OPERATION

Position the vehicle on a two-post liftVehicle: Towing and lifting .

WARNING

DANGER: HIGH VOLTAGE VEHICLE.

Risks of serious burns or electric shock that may prove fatal.

Before carrying out any work on the vehicle, it is essential that you adhere to the instructions regarding vehicle voltage cut-off. This work must be carried out by an employee who is qualified and authorized to work on a high-voltage onboard network Vehicle: Precautions for the repair .

Remove:

- the lockout of the vehicle Vehicle: Lockout - Removal of lockout ,
- the rear wheels Wheel: Removal - Refitting ,
- the rear bumper trim Exterior body rear trim assembly: Exploded view .

Blow the traction motor and the reducer with a compressed air nozzle to prevent the introduction of foreign bodies in the motor.

Remove:

- the rear driveshaft Driveshaft assembly: Exploded view ,
- the "lifting eye - wiring support" on the reducer Electric traction reduction gearing assembly: Exploded view .

Strap the traction motor to the body with a safety strap(s).

Remove:

- the left-hand suspended engine mounting Engine-gearbox unit support assembly: Exploded view ,
- the reducer Electric traction reduction gearing assembly: Exploded view ,
- the input shaft lip seal Input shaft lip seal : Removal - Refitting ,
- the differential output seal Differential output seal : Removal - Refitting ,
- the mechanism housing (see 23C, Reduction gear , Mechanism housing : Removal - Refitting) .

2. REMOVAL OPERATION

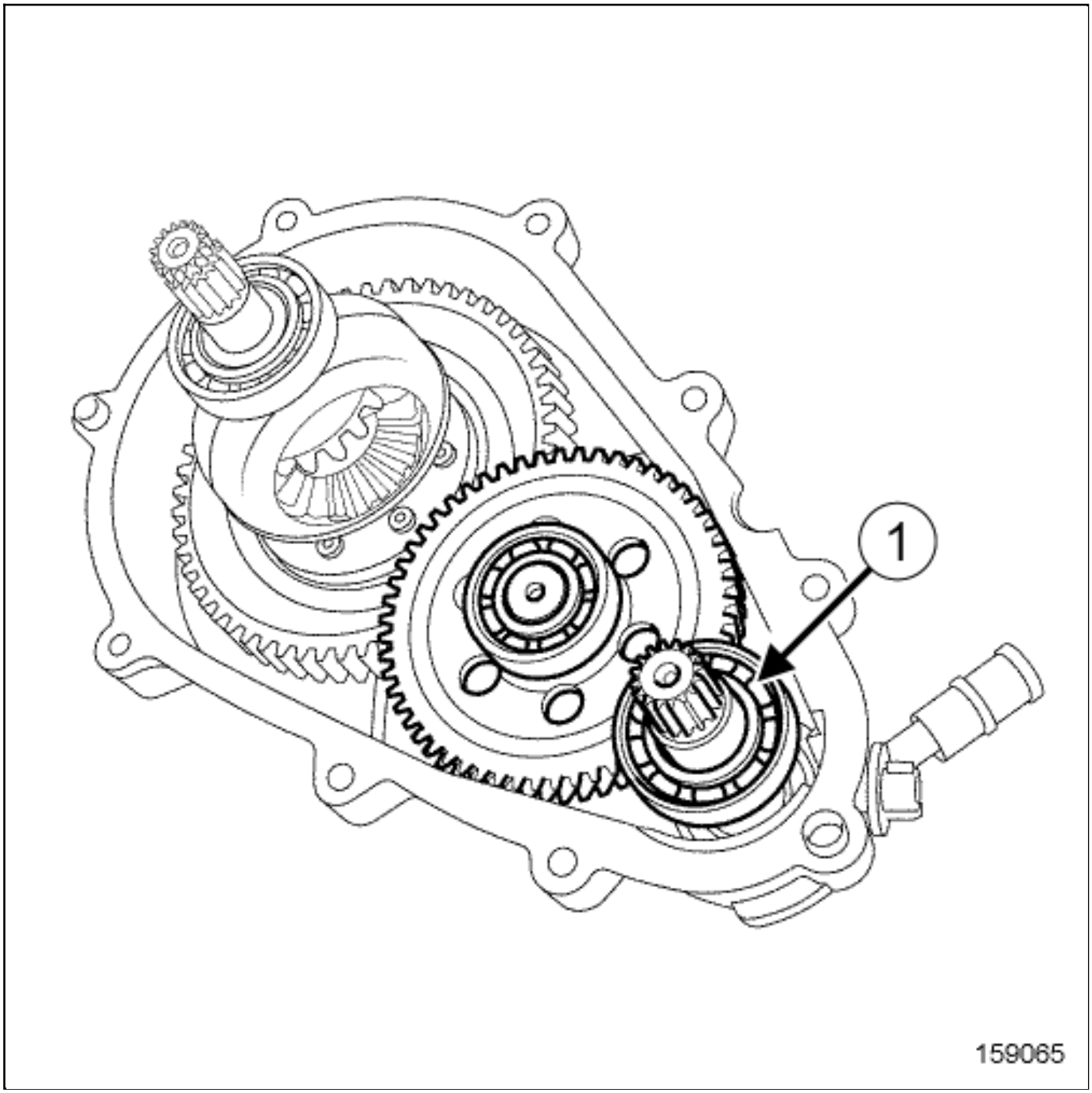

- Remove the "input shaft - output shaft" assembly from the reducer.

- Separate the input shaft(1) from the output shaft.

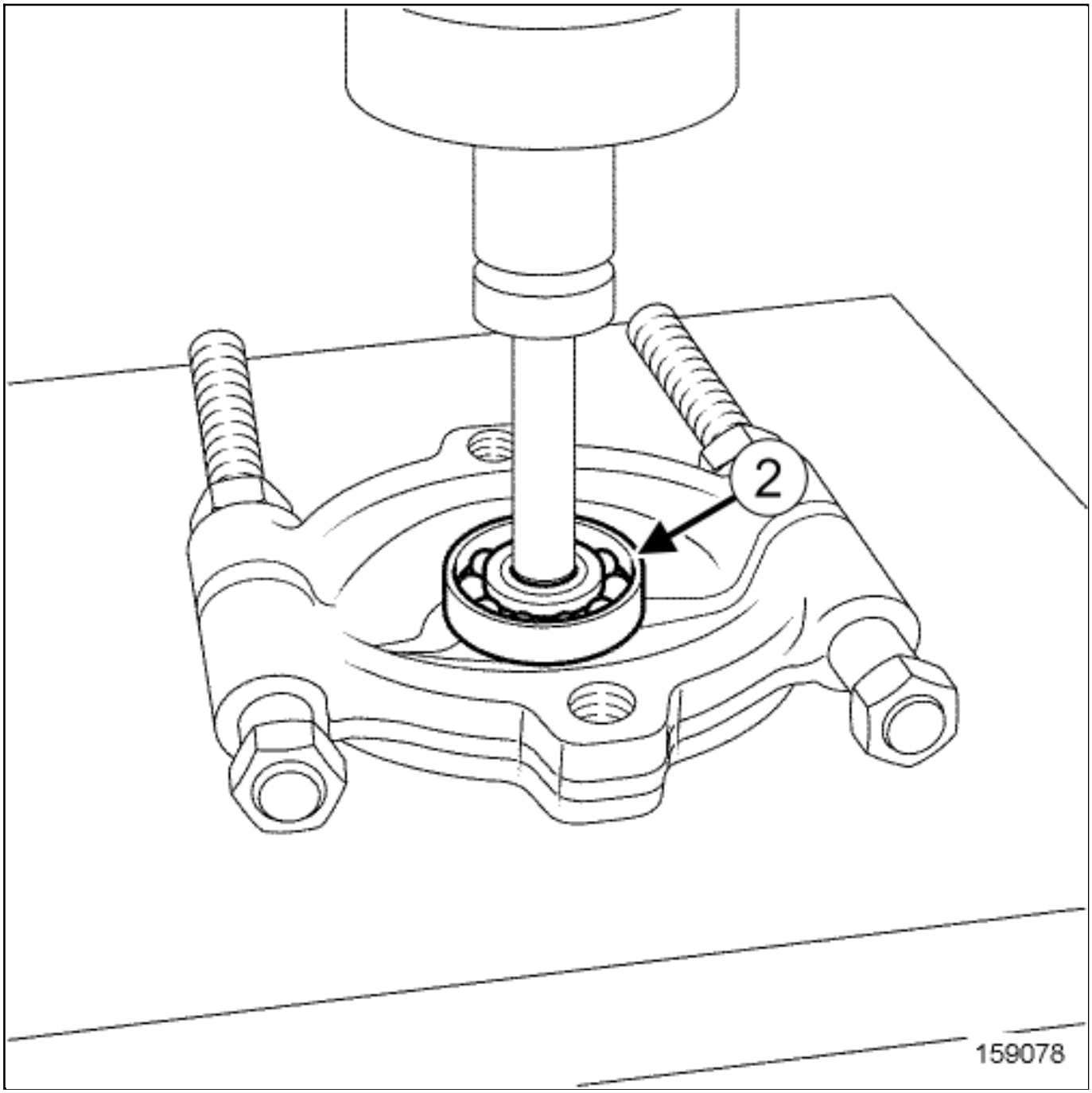
2
159078

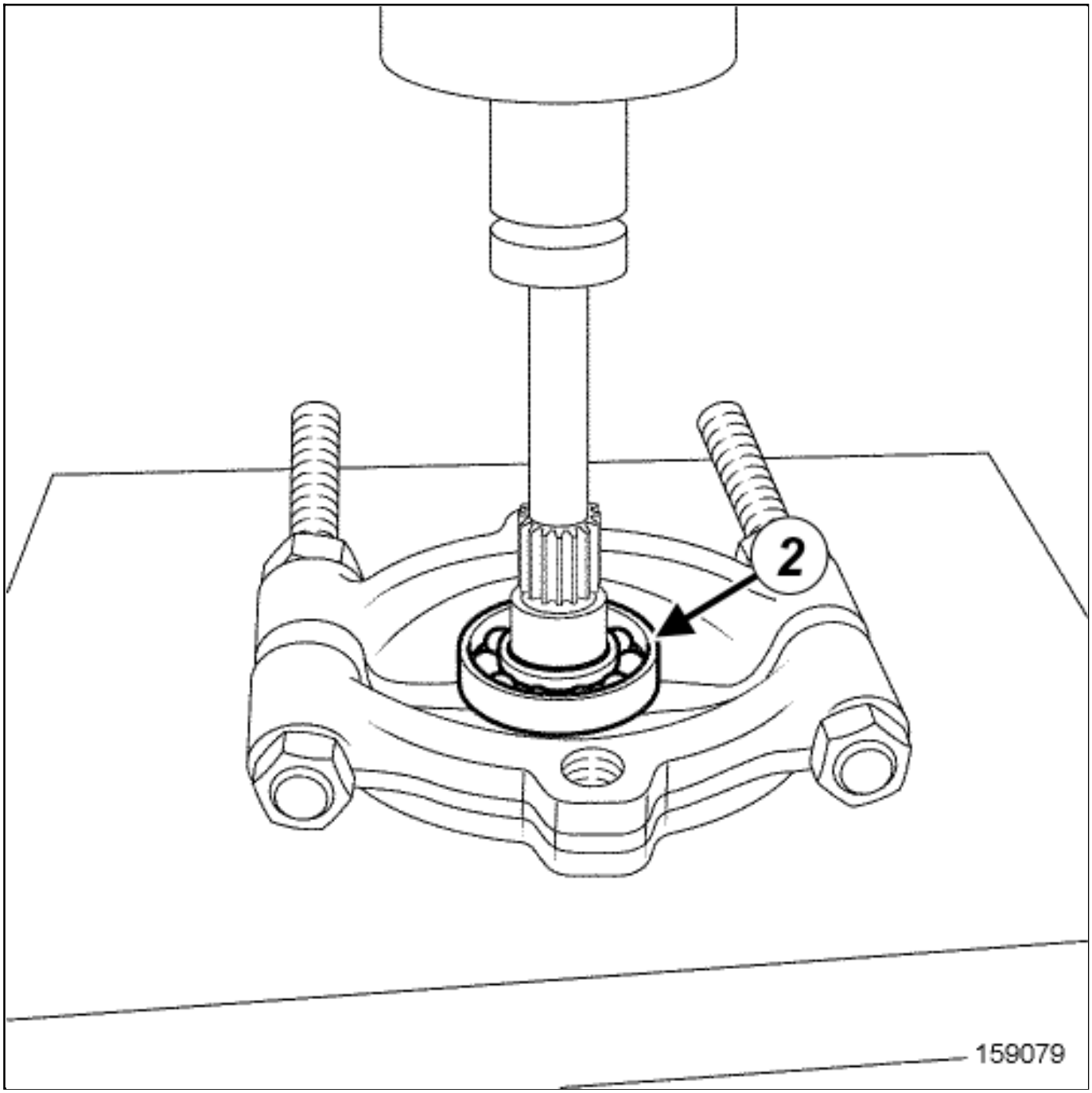

Remove the bearings(2) with a press, applying pressure with a tube.

REFITTING

1. REFITTING PREPARATION OPERATION

Use surface cleanerVehicle: Parts and consumables for the repair to clean:

- the internal and external surfaces of the bearing, in contact with the input shaft,
- the input shaft surfaces in contact with the bearing.

CAUTION

Do not press the bearing's internal bush so as to avoid damaging the bearing (very high shrink-fitting force).

Replace any component whose contact surfaces have deep scratches or cracks.

2. REFITTING OPERATION

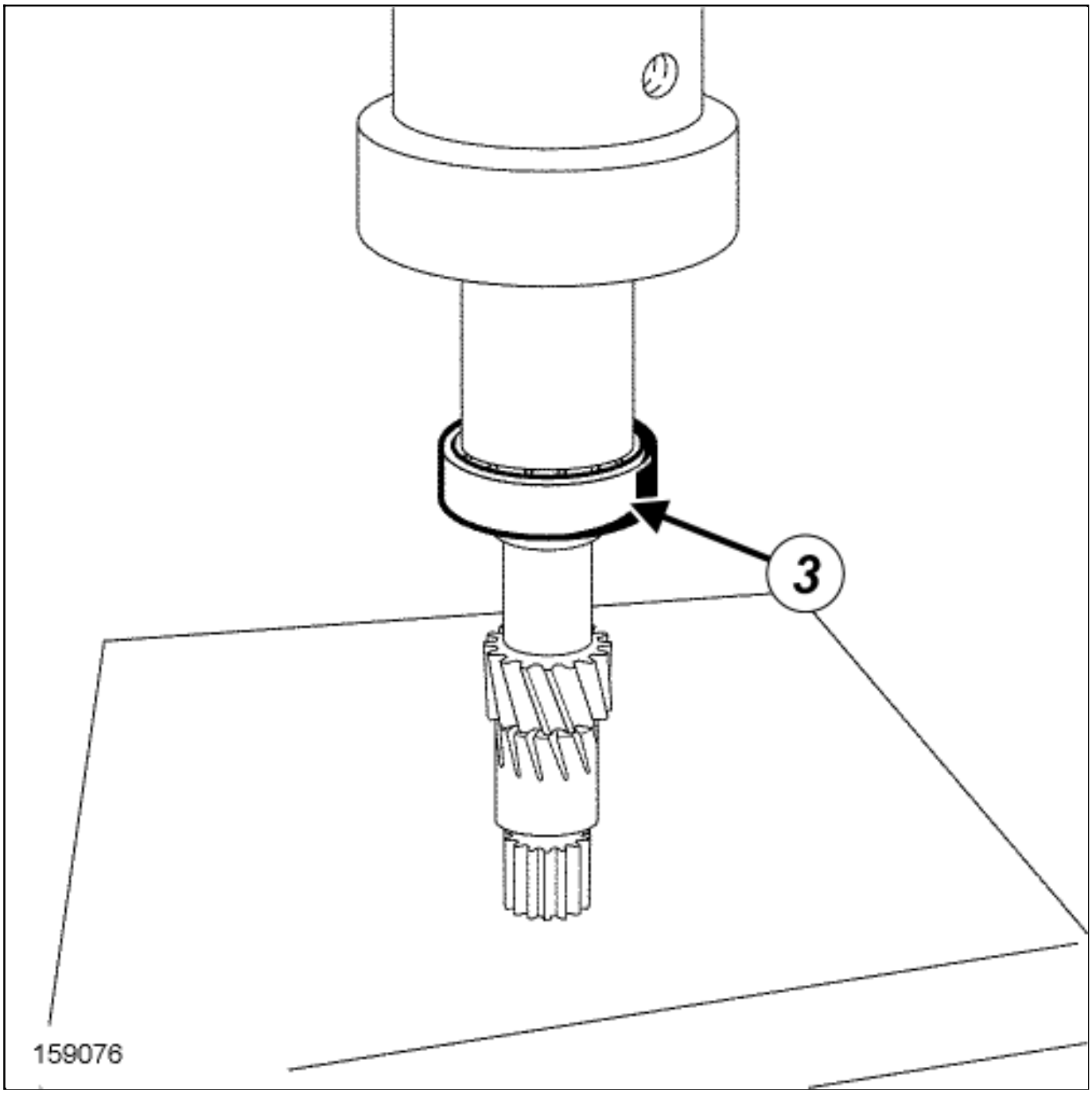
3
159076

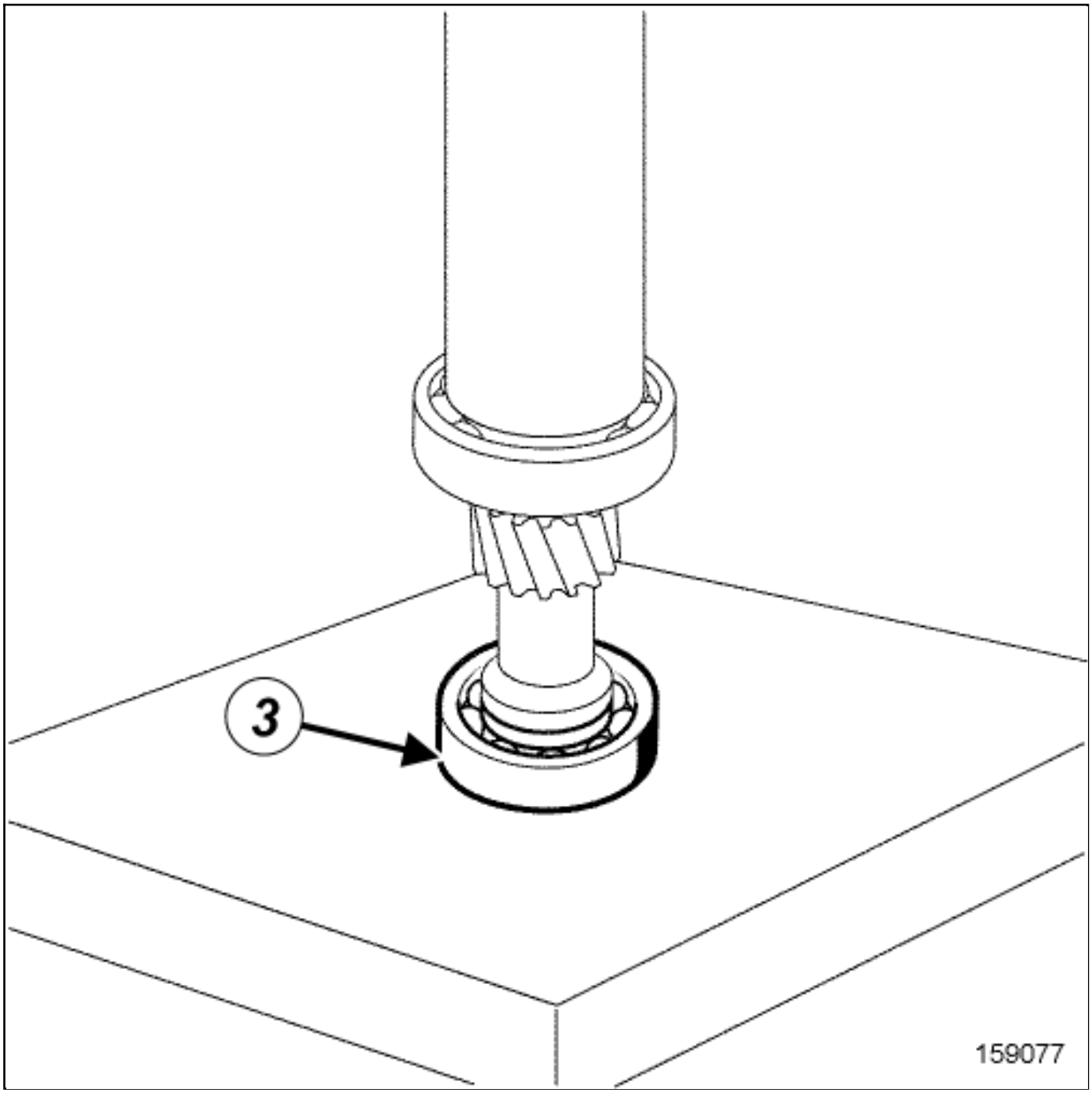

Refit the bearings(3) with a press, applying pressure with a tube.

3. FINAL OPERATION

Proceed in the reverse order to removal.

XSL version : 3.02 du 22/07/11

INSTRUMENT PANEL: REMOVAL - REFITTING

Note, one or more warnings are present in this procedure

Equipment required
Diagnostic tool

WARNING

To avoid all risk of damage to the systems, apply the safety and cleanliness instructions and operation recommendations before carrying out any repair:

Vehicle: Precautions for the repair .

Localisation and specification (tightening, torques, parts always to be replaced)Dashboard assembly: Exploded view .

REMOVAL

1. REMOVAL PREPARATION OPERATION

WARNING

To avoid any risk of triggering when working on or near a pyrotechnic component (airbags or pretensioners), lock the airbag computer using the diagnostic tool.

When this function is activated, all the trigger lines are inhibited and the airbag warning light on the instrument panel lights up continuously (ignition on).

Lock the airbag computer using the Diagnostic tool(see Fault finding - Replacement of components) (88C, Airbags and pretensioners).

Disconnect the 12V supply circuit12 V supply circuit : Lockout - Removal of lockout .

Remove:

- the front driver airbagDriver's frontal airbag: Removal - Refitting ,
- the steering wheelSteering assembly: Exploded view ,
- the steering wheel coverDashboard assembly: Exploded view ,
- the right-hand dashboard trimDashboard assembly: Exploded view ,
- the left-hand dashboard trimDashboard assembly: Exploded view ,
- the instrument panel front trimDashboard assembly: Exploded view ,

2. REMOVAL OPERATION

Remove Dashboard assembly: Exploded view :

- the instrument panel screws,
- the instrument panel assembly.

1- IN THE EVENT OF REPLACEMENT

Remove Dashboard assembly: Exploded view :

- the instrument panel visor screws,
- the instrument panel visor.

REFITTING

1. REFITTING OPERATION

❑

Proceed in the reverse order to removal.

2. FINAL OPERATION

❑

Connect the 12V supply circuit12 V supply circuit : Lockout - Removal of lockout .

❑

Unlock the airbag computer using the Diagnostic tool(see Fault finding - Replacement of components) (88C, Airbags and pretensioners).

❑

Configure the instrument panel using the Diagnostic tool(see Fault finding - Replacement of components) (83A, Instrument panel).

TWIZY

8 Electrical equipment

83A INSTRUMENT PANEL

Instrument panel
Vdiag No.: 04

Fault finding – Introduction	83A - 2
Fault finding – List and location of components	83A - 8
Fault finding – Role of components	83A - 9
Fault finding – Replacement of components	83A - 18
Fault finding – Configuration	83A - 19
Fault finding – Glossary	83A - 20
Fault finding – Fault summary table	83A - 21
Fault finding – Interpretation of faults	83A - 22
Fault finding – Fault summary table	83A - 29
Fault finding – Interpretation of faults	83A - 32
Fault finding – Fault summary table	83A - 74
Fault finding – Interpretation of faults	83A - 77
Fault finding – Fault summary table	83A - 108
Fault finding – Interpretation of faults	83A - 111
Fault finding – Conformity check	83A - 190
Fault finding – Status summary table	83A - 204
Fault finding – Interpretation of statuses	83A - 206
Fault finding – Parameter summary table	83A - 249
Fault finding – Interpretation of parameters	83A - 250
Fault finding – Command summary table	83A - 270
Fault finding – Interpretation of commands	83A - 271
Fault finding – Customer complaints	83A - 274
Fault finding – Fault Finding Chart	83A - 276
Fault finding – Appendices	83A - 304

"The repair procedures given by the manufacturer in this document are based on the technical specifications current when it was prepared.

The procedures may be modified as a result of changes introduced by the manufacturer in the production of the various component units and accessories from which his vehicles are constructed."

All rights reserved by Renault s.a.s.

Copying or translating, in part or in full, of this document or use of the service part reference numbering system is forbidden without the prior written authority of Renault s.a.s.

© Renault s.a.s. 2014

1. APPLICABILITY OF THE DOCUMENT

This document presents the fault finding method applicable to all computers with the following specifications:

Vehicle(s): **TWIZY** *Function concerned*: **Instrument panel, Inverter, Charger/converter, Traction battery**	*Name of computer:* **Instrument panel** *Vdiag No.:* **04**

2. PREREQUISITES FOR FAULT FINDING

Documentation type

Fault finding procedures (this document):
- Assisted fault finding (integrated into the **diagnostic tool)**, Dialogys.

Wiring Diagrams:
- Visu-Schéma.

Type of diagnostic tools
- **CLIP**

Special tooling required

Special tooling required:	
Diagnostic tool	
Multimeter	
Elé. 1622	Bornier
Elé. 1681	Universal bornier

If the information obtained by the diagnostic tool requires the electrical continuity to be checked, connect bornier Elé. 1622 or universal bornier Elé. 1681.

WARNING:
- All checks using bornier **Elé. 1622** or **Elé. 1681** must be performed with the battery disconnected.
- The bornier is only designed to be used with a multimeter. Never power the test points with **12 V**.

3. REMINDERS

Procedure

To run diagnostics on the vehicle computers, switch on the ignition using the key.

Faults

Faults are declared present or stored (depending on whether they appeared in a certain context and have disappeared since, or whether they remain present but are not diagnosed within the current context).

The **present** or **stored** status of faults must be considered when using the **diagnostic tool** after switching on **+ after ignition feed** (without activating any system components).

For a **present fault**, apply the procedure described in the **Interpretation of faults** section.

For a **stored fault**, note the faults displayed and apply the **Notes** section.

If the fault is **confirmed** when the instructions are applied, the fault is present. Deal with the fault.

If the fault is **not confirmed**, check:
– the electrical lines which correspond to the fault,
– the connectors on these lines (corrosion, bent pins, etc.),
– the **resistance** of the faulty component,
– the condition of the wires (melted or cut insulation, wear).

Conformity check

The conformity check is designed to check the statuses and parameters that do not display any faults on the **diagnostic tool** when they are inconsistent. Therefore, this stage is used to:

– carry out fault finding on faults that do not have a fault display, and which may correspond to a customer complaint,
– check that the system is operating correctly and that there is no risk of a fault recurring after repair.

This section gives the fault finding procedures for statuses and parameters and the conditions for checking them.

If a status is not behaving normally or a parameter is outside permitted tolerance values, you should consult the corresponding fault finding page.

Customer complaints - Fault finding chart

If the test with the **diagnostic tool** is OK but the customer complaint is still present, the fault should be dealt with by **customer complaints**.

A summary of the overall procedure to follow is provided on the following page in the form of a flow chart.

4. FAULT FINDING PROCEDURE

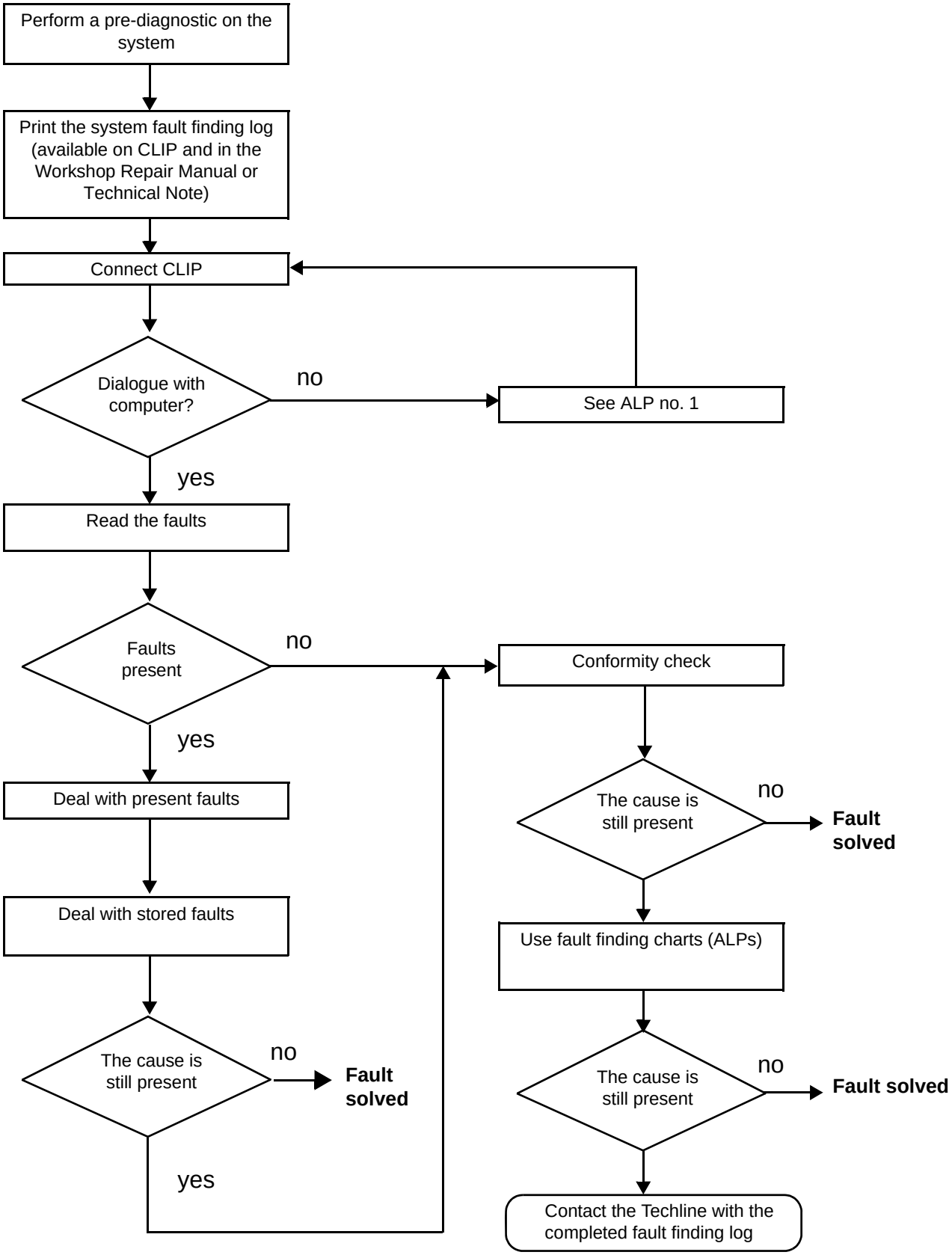

4. FAULT FINDING PROCEDURE (CONTINUED)

Wiring check

Note:
Carry out each requested check visually. Do not remove a connector if it is not required.

Note:
Repeated connections and disconnections alter the functionality of the connectors and increase the risk of poor electrical contact. Limit the number of connections/disconnections as much as possible.

Note:
The check is carried out on the 2 parts of the connection. There may be two types of connection:
– Connector / Connector
– Connector / Device

4.1. Fault finding problems

Disconnecting the connectors and/or manipulating the wiring may temporarily clear the cause of a fault.
Electrical measurements of voltage, resistance and insulation are generally correct, especially if the fault is not present when the analysis is carried out (stored fault).

4.2. Visual inspection of the connection:

- Check that the connector is connected correctly and that the male and female parts of the connection are correctly coupled.

4.3. Visual inspection of the area around the connection:

- Check the condition of the mounting (pin, strap, adhesive tape, etc.) if the connectors are attached to the vehicle.
- Check that there is no damage to the wiring trim (sheath, foam, adhesive tape, etc.) near the wiring.
- Check that there is no damage to the electrical wires at the connector outputs, in particular on the insulating material (wear, cuts, burns, etc.).

Disconnect the connector to continue the checks.

4.4. Visual inspection of the plastic casing:

- Check that there is no mechanical damage (casing crushed, cracked, broken, etc.), in particular to the fragile components (lever, lock, openings, etc.).
- Check that there is no heat damage (casing melted, darker, deformed, etc.).
- Check that there are no stains (grease, mud, liquid, etc.).

4.5. Visual inspection of the metal contacts:

(The female contact is called CLIP. The male contact is called TAB.)

- Check that there are no bent contacts (the contact is not inserted correctly and can come out of the back of the connector). The spring contact of the connector when the wire is gently pulled.
- Check that there is no damage (folded tabs, clips open too wide, blackened or melted contact, etc.).
- Check that there is no oxidation on the metal contacts.

4.6. Visual inspection of the sealing:

(Only for watertight connectors)

- Check for the seal on the connection (between the 2 parts of the connection).
- Check the seal at the back of the connectors:
    - *For unit* joints (1 for each wire), check that the unit joints are present on each electrical wire and that they are correctly positioned in the opening (level with the housing). Check that plugs are present on openings which are not used.
    - For a *grommet* seal (one seal which covers the entire internal surface of the connector), check that the seal is present.
    - For *gel* seals, check for gel in all of the openings without removing the excess or any protruding sections (it does not matter if there is gel on the contacts).
    - For *hotmelt* sealing (heat-shrink sheath with glue), check that the sheath has contracted correctly on the rear of the connectors and electrical wires, and that the hardened glue comes out of the side of the wire.
- Check that there is no damage to any of the seals (cuts, burns, significant deformation, etc.).

If a fault is detected, repair or replace the wiring (see **Technical Note 6015A, Electrical wiring repair, Wiring: Precautions for repair**).

5. FAULT FINDING LOG

IMPORTANT!

IMPORTANT
All faults involving a complex system call for thorough diagnostics with the appropriate tools. The FAULT FINDING LOG, which should be completed during the fault finding procedure, ensures a record is kept of the procedure carried out. It is an essential document when consulting the manufacturer.

IT IS THEREFORE MANDATORY TO FILL IN A FAULT FINDING LOG EACH TIME IT IS REQUESTED BY TECHLINE OR THE WARRANTY RETURNS DEPARTMENT.

You will always be asked for this log:
– when requesting technical assistance from the Techline,
– when requesting approval before replacing parts for which approval is compulsory,
– to be attached to monitored parts for which reimbursement is requested. The log is needed for warranty reimbursement, and enables better analysis of the parts removed.

6. SAFETY INSTRUCTIONS

The safety instructions must be followed at all times when working on components, to avoid damage or injury:

– make sure that the battery is properly charged to avoid damaging the computers in the event that it has a low charge,
– The drive system of an electric vehicle uses a direct current of approximately 60 volts. This system may be hot during and after switching off the ignition. Respect the warning messages on the labels present inside the vehicle. The electric circuit can be recognised by the orange colour wiring and the components marked with the symbol ⚡.
– Use the appropriate tools:

– Remove all metal jewellery (wedding rings, bracelets, watches) or any item likely to be a conductor.

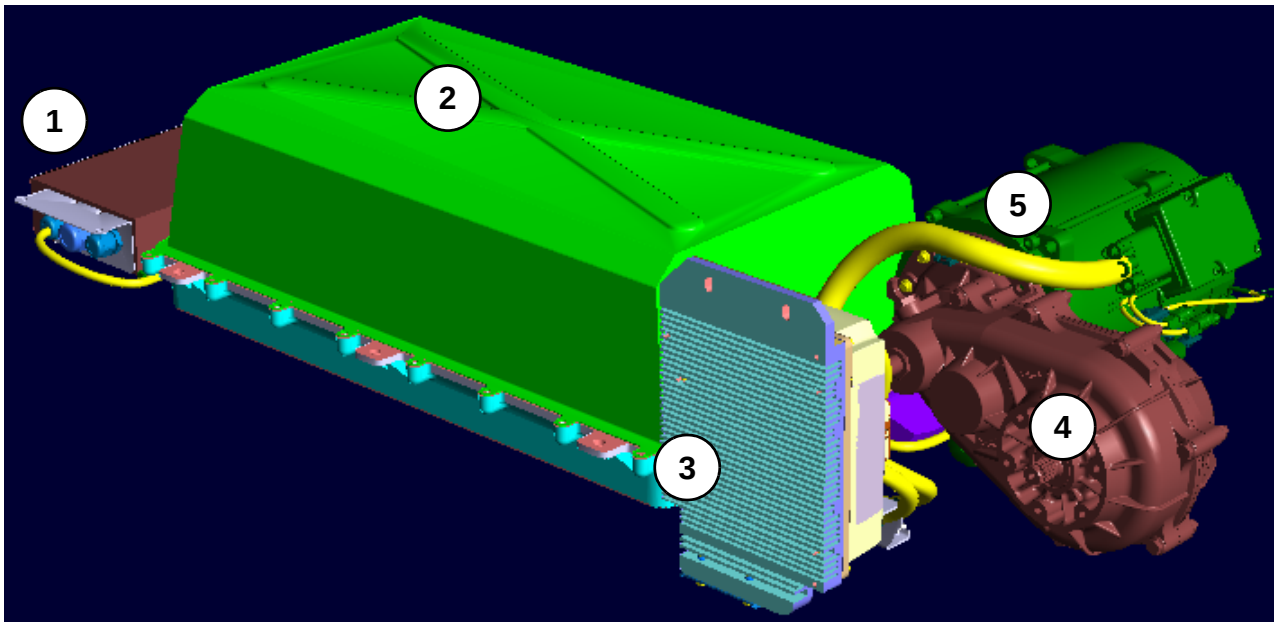

Key:

1	Charger / Converter
2	Traction battery
3	Inverter
4	Torque reducer
5	Asynchronous motor

The system is made up of the following components:

– asynchronous motor (one version)
– a torque reducer (available in two versions: 27 and 45 mph (45 and 75 km/h))
– an inverter (available in two versions: 27 and 45 mph (45 and 75 km/h))
– a DC/DC charger/converter
– Traction battery + BMS (battery management system)
– A supply relay and two power relays

FUNCTION PROVIDED BY THE INSTRUMENT PANEL

OPERATION OF THE TRIP COMPUTER

The role of the instrument panel is to give information to the driver and to collate and report any faults emitted by the inverter, the charger/converter and the traction battery from the UCH and from the airbag computer via line **K**.

Speedometer
The vehicle speed information is transmitted to the instrument panel by the multiplex network via the inverter computer.
The signal is produced by the traction motor speed sensor (component **262**). The electric motor speed sensor is fitted in the **traction motor**.

Temperature warning lights for the electro-technical system
The temperature signal is transmitted to the instrument panel via a CAN multiplex connection
The signal is produced by the **traction motor** temperature sensor (component **262**). The electric motor temperature sensor is fitted in the **traction motor** (component **262**)

Gear selector position indicator
This informs the driver about the three possible traction statuses: N, D or R. Neutral, forward gear or reverse gear respectively.

Battery charge level bargraph and traction battery low level warning light
Battery charge level
The gauge indicates the amount of power remaining.

Reserve limit
This illuminates when the traction battery charge level reaches the reserve limit.
The separate "**traction battery low level**" warning light illuminates when the battery reaches approximately 12% of charge.
When the battery reaches below 6% of charge, the warning light flashes.

Warning lights
List of warning lights used for vehicle fault finding:

Warning light for the electro-technical system
This is represented by a battery with an exclamation mark inside. If it illuminates when driving, it signals an electro-technical fault linked to the "60 volt" electrical circuit.

Charging lead connection light
This illuminates as soon as the charging lead is connected to the 220 V domestic mains power supply.

Temperature warning lights for the electro-technical system
This is represented by a battery with a thermometer inside. When the blue warning light illuminates, this signals that the traction battery temperature is too high or too low.
In all cases, illumination of the warning lights may result in reduced vehicle performance.

Warning light
This is represented by an orange warning light with the letters SERV inside. This illuminates when the ignition is switched on and then goes out as soon as the electric motor starts. It may illuminate in conjunction with other instrument panel warning lights.

Essential to stop warning light
This is a red warning light with the letters STOP inside. This illuminates when the ignition is switched on and then goes out as soon as the electric motor starts. It illuminates in conjunction with other warning lights and is accompanied by an audible bleep.
This warning light signifies that it is essential to stop immediately as soon as traffic conditions permit.

Traction battery low level warning light
This is represented by a battery with a low level. It illuminates when the traction battery charge level reaches the reserve limit.

Asynchronous motor:

The electric motor is of asynchronous type. It consists of a temperature control device and an electric motor speed device.
The electric motor generates the torque needed to move the vehicle forwards or backwards.
In braking situations, the electric motor torque is used to recharge the traction battery.

Inverter:

Main functions:
Converts a direct current voltage into an alternating current voltage. It manages the traction and then controls the asynchronous motor over its operating ranges.
The role of the inverter is to manage the immobiliser function.

Inverter operating mode:
Traction mode: the inverter supplies the power used for vehicle traction
Charge mode: the inverter is deactivated during charging

Operating conditions:

<u>In charge mode:</u>
The vehicle is connected to the mains supply. The traction battery is being charged.

<u>In traction mode:</u>
The traction battery charge must be sufficient.
Vehicle not connected to the mains supply.
The inverter must be activated. Activation is via the inverter power supply relay located in the traction battery tray
The inverter must have first controlled the inverter power relay (located in the traction battery) in order activate traction mode.
Traction mode becomes effective when the + START ignition is switched on

Charger/converter:

Operating modes

The charger/converter is designed to be operational during the Traction and Charge modes:

- Charge Mode (mains socket connected): the charger/converter activates the BMS via the CAN and the instrument panel with the battery supply. If necessary, the charger recharges the auxiliary battery whilst the traction battery is being charged. During this mode, the inverter is on standby (power relay open). When the traction battery is charged, the charger opens the charger power relay and the BMS switches to standby mode (CAN request). *ET298 END OF CHARGE REQUEST*

  Different mains voltage ranges in the world:

  ➔ *Europe: 200 V–240 V 50 Hz*
  ➔ *America: 100 V–127 V 60 Hz*
  ➔ *Brazil: 110 V/127 V/220 V 60 Hz*
  ➔ *Pacific: 100 V/127 V 50 Hz*

- Traction Mode (+ after ignition): The charger/converter activates the BMS via the CAN and closes the charger and inverter power supply relays. In + START, the inverter closes the inverter power relay and becomes operational by managing the position of the selector and the position of the accelerator pedal.

Auxiliary battery:

In the event of a discharged battery, it is recommended that the 12 V battery be recharged via the charging lead connected
to the mains supply (observe the minimum charge of 8 hours).
In this case, there is no need to carry out any operations on the electrical connections of the battery.
Check that the ignition is switched off beforehand.

If a charger is used, remove the battery from the vehicle and check that the charger has a current limited to 5 A; otherwise, there is a risk of damage to the battery, with internal and external deformation.

Risk of serious injury.

The recommended chargers for charging the auxiliary battery are:

- **GYS Inverter 5F**
- **TECMATE OptiMate 6**

Maximum operating threshold:
– Charger/converter: 2 kW
– Traction battery charge current: 40 A
– 12 V battery charge current: 25 A

Operating statuses

– OFF: The charger/converter is not operational; no electrical supply. Operates with sources such as 230 VAC, 60 VDC and/or 14 VDC.
– Standby: Low electrical consumption because the system is not active.
– Standby + reset: Similar to standby mode + application control reset
– Fault: Switches to defect mode if activation is not possible or there are other faults in the system. (Batteries, impact detection)
– Charge: Charging the batteries using the mains supply voltage.
– Traction: Charging the traction battery during the brake recovery phases, charging the 12 V battery with the traction battery.
– Reprogramming: Loading new on-board software after fault finding.
– DCDC activation: Activates the charger/converter to recharge the 12 V battery using the 230 V.

IMPORTANT!

From 15/08/2014, a system to maintain the charge of the auxiliary battery will be fitted to the vehicle.

Part numbers for the first generations of charger not taking the charge function of the 12 V battery into account during the vehicle sleep phases: 296054684R, 296055169R, 296052118R, 296051612R, 296058331R, 296050008R.
To prevent discharge of the auxiliary battery when the charging plug is not connected, a charging program for this battery has been implemented. Without any external visual sign, 35 minutes after switching off the + after ignition feed, the charger activates and charges the auxiliary battery if necessary. The charger uses the voltage of the traction battery to recharge the auxiliary battery. If the charge percentage of the traction battery is less than 15%, this recharge function is not authorised or is cancelled.

IMPORTANT!

WARNING
DANGER: Risk of serious injury due to a short circuit or unexpected triggering of an electrical system (pyrotechnic parts, windscreen wiper motor, electric fan etc.) further to potential loopback of the 12 V supply circuit by the charger.
Observe the instructions relating to cut off of the 12 V supply circuit.
If the procedure is unsuccessful, do not carry out the operation and ask an employee trained and authorised to work on a high voltage on-board network to run fault finding (see 01D, Mechanical introduction, vehicle: Precautions for repair).

IMPORTANT!

Before any operation on the vehicle. ➔ Refer to the 12 V lockout procedure (MR-454-1002978: 12 V supply circuit: Lockout - removal of lockout)

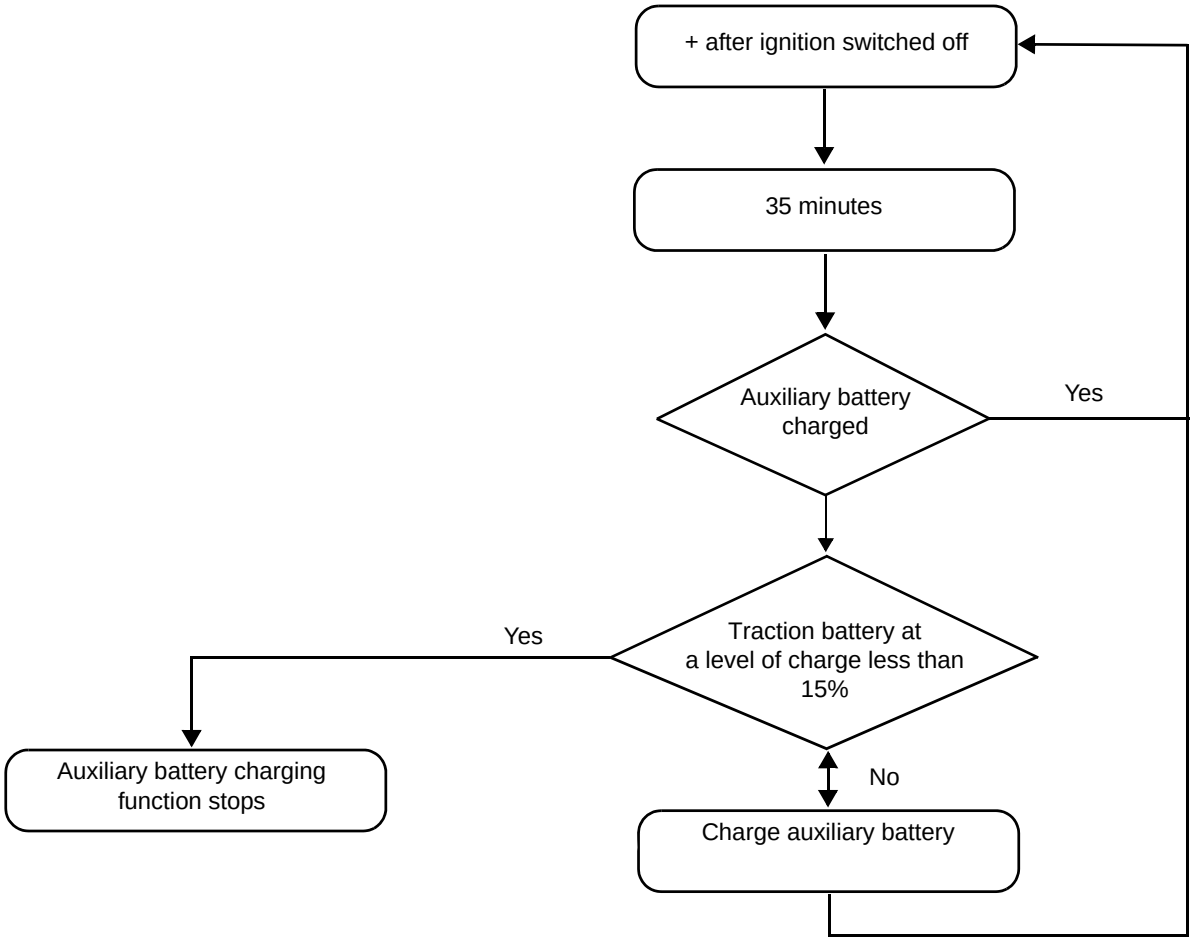
+ after ignition switched off
35 minutes
Auxiliary battery charged
Yes
Traction battery at a level of charge less than 15%
Yes
Auxiliary battery charging function stops
No
Charge auxiliary battery

Power relay:
– The three power relays are located inside the traction battery tray
– Charger power relay: Authorises or cuts the power between the traction battery and the charger (DC/AC)
– Inverter supply relay: Activates the inverter via the charger.
– Inverter power relay: Authorises or cuts the power between the traction battery and the inverter

Traction battery:

The traction battery consists of 7 modules each with 6 lithium cells (2 serial blocks each containing 3 cells fitted in parallel).

Range:
For each cell: 3.75 V / 43 Ah
Traction battery: 7 KwH / 52.5 V

The battery + terminal can be isolated from the vehicle via the two power connectors connected to the charger and to the traction battery as well as the 60 A fuse.
The inverter power relay is controlled by the inverter whereas the charger power relay and inverter supply relay are controlled by the charger/converter.
Maximum voltage for the traction system: 60 V. Common earth for the vehicle and the traction system.

The three computers are connected via the CAN multiplex network.
The inverter is supplied by a voltage of 60 V; the charger and the BMS are supplied by the 14 V onboard network.
Both versions of the TWIZY (27 and 45 mph (45 and 75 km/h)) have the same components (traction battery, electric motor, charger) with the exception of the inverter and the torque reducer.

Auxiliary battery:

It is strictly forbidden to use a booster/regular charger used on an internal combustion engine vehicle to recharge the auxiliary battery of Twizy. This would irreparably damage the battery, which would then need to be replaced.

IMPORTANT!

Only a charger compatible with a nominal voltage of 14.4 Volts and a current limited to 5 Amps should be used when charging the auxiliary battery of Twizy.

In order to avoid swelling of the battery following an unlimited current during charging when the battery has undergone a deep discharge, no operation should be carried out on the battery:

- Without the ignition having been switched off beforehand
- If the traction battery is charging

For more information, refer to the Driver's Handbook, to the section "Electric vehicle: charging" in chapter 1, "Risk of serious injury".

Instrument panel replacement operation:

– Carry out fault finding before replacing the instrument panel.
– Instrument panel removal - refitting operation: see MR 454 mechanical.
– The instrument panel may be replaced when the Techline has given its approval.
– After replacing the instrument panel it is necessary to perform all the configurations in the following paragraph: **Fault finding – Configuration**

Traction battery replacement operation:

– Before replacing the traction battery, perform fault finding.
– Traction battery removal - refitting operation: see MR 454 mechanical.
– Replacement of the traction battery is carried out after obtaining Techline approval.

Inverter replacement operation:

– Before replacing the inverter, perform fault finding.
– Inverter removal - refitting operation: see MR 454 mechanical.
– Replacement of the inverter is carried out after obtaining Techline approval.

Charger/converter replacement operation:

– Before replacing the charger/converter, perform fault finding.
– Charger/converter removal - refitting operation: see MR 454 mechanical.
– Replacement of the charger/converter is carried out after obtaining Techline approval.

INSTRUMENT PANEL CONFIGURATIONS

Possible instrument panel configurations are:

Equipment required:
CLIP diagnostic tool

Configuration	Configuration reading	Name of configuration	Configuration
CF140	LC051	UNIT OF DISTANCE	Specifies the unit of distance: kilometres or miles
CF137	LC030	VEHICLE TYPE	Configures the instrument panel for either the Twizy or Twizy 45 type
CF230		ECONOMETER	Configures the econometer for either the Twizy or Twizy 45 type as well as the undervoltage of the on-board network.
CF227		BATTERY RANGE	Configures the instrument panel to display the range of the traction battery for a Twizy.
CF229		GEAR PROGRAMMING	Configures the instrument panel for either the Twizy or Twizy 45 type
CF228		BATTERY RANGE	Configures the instrument panel to display the range of the traction battery for a Twizy 45.

- Check the configurations in the **Read configurations** menu

LBC / BMS	Traction battery (component code 938)
PEB / Inverter	Inverter (component code 1063)
BCB	Charger/Converter (component code 2093)

1. Faults related to the Instrument Panel

Tool fault	Computer/fault codes	Diagnostic tool title
DF255	1/2	COMPUTER SUPPLY VOLTAGE
DF256	1/26	COMPUTER SUPPLY VOLTAGE
DF495	2/1	CHARGER COMPUTER ABSENT
DF496	3/1	TRACTION BATTERY COMPUTER ABSENT
DF497	4/1	INVERTER COMPUTER ABSENT
DF512	1/25	BCB MULTIPLEX TRANSMISSION ABSENT

DF256 PRESENT OR STORED	COMPUTER SUPPLY VOLTAGE

NOTES	**Special notes:**
	Note: Undervoltage detected by the instrument panel below **9 V**
	Special note: Use the **Wiring Diagrams Technical Note for Twizy**.

Check the condition of fuse **F02** (**60 A**) of the **passenger compartment fuse and relay box**, component code **1016**. Replace the fuse if it is defective. Check the **auxiliary battery** using the Midtronics tool. Connect the vehicle to the **220 V** mains supply; the charger should recharge the auxiliary battery from its DCDC function. If the battery is discharged, leave the vehicle to charge for six hours. Check the battery voltage: if the voltage is less than **8 V**, replace the auxiliary battery.
If the fault is still present, contact the Techline.

AFTER REPAIR	Follow the instructions. Deal with any other faults. Clear the **stored** faults.

DF255 PRESENT OR STORED	COMPUTER SUPPLY VOLTAGE

NOTES	**Special notes:**
	Note: Undervoltage
	Special note: Use the **Wiring Diagrams Technical Note for Twizy**. Check that the CLIP diagnostic tool update is recent enough to be able to deal with faults on the vehicle.

Check the condition of fuse **F04 (15 A) of the passenger compartment fuse and relay box**, component code **1016**. Replace the fuse if it is defective.
Check the condition of fuse **F08 (5 A) of the passenger compartment fuse and relay box**, component code **1016**. Replace the fuse if it is defective.
Check the **condition** and **connection** of the connectors of the **battery charger unit**, component code **2093**. If the connectors are faulty and if there is a repair procedure (see **Renault Technical Note 6015A, Repairing electrical wiring, Wiring: Precautions for repair**), repair the connectors, otherwise replace the wiring.
Check the **condition** and **connection** of the **passenger compartment relay and fuse box** connectors, component code **1016**. If the connectors are faulty and if there is a repair procedure (see **Renault Technical Note 6015A, Repairing electrical wiring, Wiring: Precautions for repair**), repair the connectors, otherwise replace the wiring.
Check the **condition** and **connection** of the connectors of the **instrument panel**, component code **247**. If the connectors are faulty and if there is a repair procedure (see **Renault Technical Note 6015A, Repairing electrical wiring, Wiring: Precautions for repair**), repair the connectors, otherwise replace the wiring.

AFTER REPAIR	Follow the instructions. Deal with any other faults. Clear the **stored** faults.

DF255 CONTINUED	

Check for the presence of **+12 V** on the **passenger compartment fuse and relay box**, component code **1016** on the following connections:
- **BC** of **component 1016**.
- **AP29** of **component 1016**.

Check **the continuity and insulation** of the following connections:
- **BC** between components **1016** and **2093**.
- **AP29** between components**1016** and **2093**.

If the connection or connections are faulty and if there is a repair procedure (see **Renault Technical Note 6015A, Repairing electrical wiring, Wiring: Precautions for repair**), repair the wiring, otherwise replace the wiring.

Check **the continuity, the insulation to earth**, and **the absence of interference resistance** on the following connection:

- **NC** between components **247** and **NC**.

If the connection is faulty and if there is a repair procedure (see **Renault Technical Note 6015A, Repairing electrical wiring, Wiring:** Precautions for repair), repair the wiring, otherwise replace the wiring.

If the fault is still present, replace the **instrument panel** computer, component code **247**.

AFTER REPAIR	Follow the instructions. Deal with any other faults. Clear the **stored** faults.

DF495 PRESENT OR STORED	CHARGER COMPUTER ABSENT

NOTES	**Note:**
	Special note: Use the **Wiring Diagrams Technical Note for Twizy**. Check that the CLIP diagnostic tool update is recent enough to be able to deal with faults on the vehicle.

Check the condition of fuse **F13 (5 A)** of the **passenger compartment fuse and relay box**, component code **1016**. Replace the fuse if it is defective.
Check the condition of fuse **F1 (50 A)** of the **passenger compartment fuse and relay box**, component code **1016**. Replace the fuse if it is defective.
Check the **auxiliary battery** using a multimeter. The voltage must be greater than **8 V**.
Perform a test on the multiplex network (see **88B, Multiplexing**).
If the fault is still present, contact the Techline.

AFTER REPAIR	Follow the instructions. Deal with any other faults. Clear the **stored** faults.

TDB_V04_DF495

DF496 PRESENT OR STORED	TRACTION BATTERY COMPUTER ABSENT

NOTES	**Special notes:**
	Note:
	Special note: Use the **Wiring Diagrams Technical Note for Twizy**. Check that the CLIP diagnostic tool update is recent enough to be able to deal with faults on the vehicle.

Check the condition of fuse **F02 (20 A)** of the **passenger compartment fuse and relay box**, component code **1016**. Replace the fuse if it is defective.
Check the condition of fuse **F1 (50 A)** of the **passenger compartment fuse and relay box**, component code **1016**. Replace the fuse if it is defective.
Check the **auxiliary battery** using the Midtronics tool.
Make sure that the computers installed in the vehicle are the correct type and are compatible with the vehicle. Check that the computers are supplied correctly (earth, + battery, + accessories or + after ignition, fuse).
Perform a test on the multiplex network (see **88B, Multiplexing**).
Check that the charger operates correctly. The charger activates the traction battery computer.
If the fault is still present, contact the Techline.

AFTER REPAIR	Follow the instructions. Deal with any other faults. Clear the **stored** faults.

DF497 DTC4/1 PRESENT OR STORED	INVERTER COMPUTER ABSENT

NOTES	**Note:**
	Special note: Use the **Wiring Diagrams Technical Note for Twizy**. Check that the CLIP diagnostic tool update is recent enough to be able to deal with faults on the vehicle.

Check the condition of fuse **F21 (5 A)** of the **passenger compartment fuse and relay box**, component code **1016**. Replace the fuse if it is defective.
Check the condition of fuse **F1 (50 A)** of the **passenger compartment fuse and relay box**, component code **1016**. Replace the fuse if it is defective.
Check the **auxiliary battery** using a multimeter. The voltage must be greater than **8 V**.
Perform a test on the multiplex network (see **88B, Multiplexing**).
If the fault is still present, contact the Techline.

AFTER REPAIR	Follow the instructions. Deal with any other faults. Clear the **stored** faults.

TDB_V04_DF497

DF512 PRESENT OR STORED	BCB MULTIPLEX TRANSMISSION ABSENT

NOTES	**Special notes:**
	Note: **If the fault is stored, try to make it recur when charging or driving the vehicle.**
	Special note: Use the **Wiring Diagrams Technical Note for Twizy**. Check that the CLIP diagnostic tool update is recent enough to be able to deal with faults on the vehicle.

Deal with the following faults first: **DF495, DF496, DF497 to indicate an absent traction system computer**.
Perform fault finding on the multiplex function (see Section 12.1 Multiplexing).
Make sure that the computers installed in the vehicle are the correct type and are compatible with the vehicle. Check that the computers are supplied correctly (earth, + battery, + accessories or + after ignition).
Check the **connection** and **condition** of the connectors of the **instrument panel**, component code **247.** If the connectors are faulty and if there is a repair procedure (see **Renault Technical Note 6015A, Repairing electrical wiring, Wiring: Precautions for repair**), repair the connectors, otherwise replace the wiring.
Check the **insulation, continuity** and the **absence of interference resistance** of the following connections: • **133B** between components **247** and **225** • **133C** between components **247** and **225** If the connection is faulty and if there is a repair procedure (see **Renault Technical Note 6015A, Repairing electrical wiring, Wiring: Precautions for repair**), repair the wiring, otherwise replace the wiring.
If the fault is still present, replace the **charger**, component code **1093**, before contacting the **Techline**.

AFTER REPAIR	Follow the instructions. Deal with any other faults. Clear the **stored** faults.

TDB_V04_DF512

2. Faults linked to the Charger/Converter

Tool fault	Diagnostic tool title
DF089	AIRBAG MULTIPLEX SIGNAL
DF130	DRIVER'S FRONTAL AIRBAG
DF131	INSTRUMENT PANEL MULTIPLEX SIGNAL ABSENT
DF133	BCB
DF134	CHARGER POWER RELAY
DF181	
DF182	
DF135	60 V BATTERY
DF172	
DF173	
DF174	
DF176	
DF138	CONNECTOR DISCONNECTED
DF177	60 V BATTERY
DF157	INVERTER SUPPLY RELAY
DF161	HIGH VOLTAGE CIRCUIT
DF162	

2. Faults linked to the Charger/Converter (continued 1)

Tool fault	Diagnostic tool title
DF192	LBC MULTIPLEX TRANSMISSION ABSENT
DF193	
DF313	
DF314	
DF315	
DF316	
DF317	
DF318	
DF333	
DF319	
DF298	PEB MULTIPLEX TRANSMISSION ABSENT
DF299	
DF320	LBC MULTIPLEX TRANSMISSION ABSENT
DF321	
DF322	
DF325	
DF427	
DF324	

2. Faults linked to the Charger/Converter (continued 2)

Tool fault	Diagnostic tool title
DF347	DCDC 14 V OUTPUT
DF348	
DF349	
DF351	
DF352	
DF443	
DF444	
DF362	COMPUTER INTERNAL TEMPERATURE
DF363	
DF508	INTERNAL FAULT
DF527	
DF529	
DF531	
DF554	
DF532	
DF530	
DF539	INTERNAL FAULT
DF445	TRACTION BATTERY VOLTAGE MEASUREMENT
DF528	INTERNAL FAULT
DF434	LBC MULTIPLEX TRANSMISSION ABSENT

DF089 PRESENT OR STORED	AIRBAG MULTIPLEX SIGNAL

NOTES	**Special note:** The fault is **present** in activation, charge and traction mode
	Special note: **First check that the computer at the end of the faulty segment is properly powered (earth, + battery, + accessories or + after ignition).** **Always check the computer conformity.**
	IMPORTANT: Switch off the ignition or remove the RENAULT card from the card reader, wait for **1 minute** then disconnect the battery. Refer to the user manual for the list of computer initialisation operations to be carried out when the battery is reconnected.

Check the **connection** and **condition** of the connectors of the **charger/converter**, component code **2093**. If the connectors are faulty and if there is a repair procedure (see **Renault Technical Note 6015A, Repairing electrical wiring, Wiring: Precautions for repair**), repair the connectors, otherwise replace the wiring.
Check the **connection** and **condition** of the connectors of the **airbag**, component code **756**. If the connectors are faulty and if there is a repair procedure (see **Renault Technical Note 6015A, Repairing electrical wiring, Wiring: Precautions for repair**), repair the connectors, otherwise replace the wiring.
Check the **insulation, continuity** and the **absence of interference resistance** on the following connection: • **60BR** between components **756** and **2093** If the connection is faulty and if there is a repair procedure (see **Renault Technical Note 6015A, Repairing electrical wiring, Wiring: Precautions for repair**), repair the wiring, otherwise replace the wiring.
Deal with the **airbag** faults first. If the fault persists, contact the **Techline**.

AFTER REPAIR	Follow the instructions. Deal with any other faults. Clear the **stored** faults.

TDB_V04_DF089

DF130 PRESENT OR STORED	DRIVER'S FRONTAL AIRBAG

NOTES	**Special note:** The fault is **present** in activation, charge and traction mode
	Special note: Use the **Wiring Diagrams Technical Note for Twizy**.

For safety reasons the charger/converter switches itself off when an impact is detected by the airbag computer. The charger then prohibits the closure of the power relays in the traction battery, making it impossible to start the vehicle.
Deal with the **airbag** faults first. If it does not respond then replace the **airbag computer**, component code **756**.
Check the **connection** and **condition** of the connectors of the **charger/converter**, component code **2093**. If one or more connectors are faulty and if there is a repair procedure (see **Renault Technical Note 6015A, Repairing electrical wiring, Wiring: Precautions for repair**), repair the connector(s), otherwise replace the wiring.
Check the **connection** and **condition** of the connectors of the **airbag**, component code **756**. If the connectors are faulty and if there is a repair procedure (see **Renault Technical Note 6015A, Repairing electrical wiring, Wiring: Precautions for repair**), repair the connectors, otherwise replace the wiring.

AFTER REPAIR	Follow the instructions. Deal with any other faults. Clear the **stored** faults.

TDB_V04_DF130

DF130 CONTINUED	

Check the **insulation**, **continuity** and the **absence of interference resistance** on the following connection: • **60BR** between components **756** and **2093** If the connection is faulty and if there is a repair procedure (see **Renault Technical Note 6015A, Repairing electrical wiring, Wiring: Precautions for repair**), repair the wiring, otherwise replace the wiring.
If the fault is still present, replace the **airbag** computer. If the fault is still present, replace the **charger**.
If the fault is still present, contact the Techline.

AFTER REPAIR	Follow the instructions. Deal with any other faults. Clear the **stored** faults.

DF131 PRESENT OR STORED	TDB MULTIPLEX TRANSMISSION ABSENT

NOTES	**Special note:** The fault is **present** in activation, charge and traction mode
	Note: In activation mode: brake light on Charge: charge maintained, brake light on Traction: traction maintained, brake light on
	Special note: Use the **Wiring Diagrams Technical Note for Twizy**.

Perform fault finding on the multiplex function (see **88B Multiplexing**).
Make sure that the computers installed in the vehicle are the correct type and are compatible with the vehicle. Check that the computers are supplied correctly (earth, + battery, + accessories or + after ignition).
Check the **connection** and **condition** of the connectors of the **charger/converter**, component code **2093**. If the connectors are faulty and if there is a repair procedure (see **Renault Technical Note 6015A, Repairing electrical wiring, Wiring: Precautions for repair**), repair the connectors, otherwise replace the wiring.
Check the **connection** and **condition** of the **instrument panel** connectors, component code **247**. If the connectors are faulty and if there is a repair procedure (see **Renault Technical Note 6015A, Repairing electrical wiring, Wiring: Precautions for repair**), repair the connectors, otherwise replace the wiring.

AFTER REPAIR	Follow the instructions. Deal with any other faults. Clear the **stored** faults.

DF131 CONTINUED	

Check the **insulation, continuity** and the **absence of interference resistance** of the following connections:
- **133B** between components **2093** and **225**
- **133C** between components **2093** and **225**
- **133B** between components **247** and **225**
- **133C** between components **247** and **225**

If the connection is faulty and if there is a repair procedure (see **Renault Technical Note 6015A, Repairing electrical wiring, Wiring: Precautions for repair**), repair the wiring, otherwise replace the wiring.

If the fault is still present, replace the **instrument panel**.
If the fault is still present, replace the **charger**.
If the fault is still present, contact the Techline.

AFTER REPAIR	Follow the instructions. Deal with any other faults. Clear the **stored** faults.

DF133 PRESENT OR STORED	BCB

NOTES	**Special note:** Charger internal fault. The fault is **present** in activation, charge and traction mode.
	Special note: Use the **Wiring Diagrams Technical Note for Twizy**.

With the ignition switched off, the vehicle should not be in charge mode; remove **fuse F2** (**60 A**) from the **passenger compartment fuse and relay box**, component code **1016**, wait **2 minutes** and then refit the fuse.
If the fault is still present, replace the **charger**. If the fault persists, contact the **Techline**.

AFTER REPAIR	Follow the instructions. Deal with any other faults. Clear the **stored** faults.

DF134 **DF181** **DF182** **PRESENT** **OR** **STORED**	CHARGER POWER RELAY

NOTES	**Special note:** The fault is **present** in activation, charge and traction mode.
	Note: – In activation mode: no charge or traction. – In charge mode: no effect. – In traction mode: no effect.
	Special note: Use the **Wiring Diagrams Technical Note for Twizy**.

Check the **condition** and **connection** of the connectors of the **battery charger unit**, component code **2093**. If the connectors are faulty and if there is a repair procedure (see **Renault Technical Note 6015A, Repairing electrical wiring, Wiring: Precautions for repair**), repair the connectors, otherwise replace the wiring.
Check the **condition** and **connection** of the connectors of the **traction battery unit**, component code **938**. If the connectors are faulty and if there is a repair procedure (see **Renault Technical Note 6015A, Repairing electrical wiring, Wiring: Precautions for repair**), repair the connectors, otherwise replace the wiring.

AFTER REPAIR	Follow the instructions. Deal with any other faults. Clear the **stored** faults.

DF134 **DF181** **DF182** **CONTINUED**	

Check **the continuity and insulation** of the following connections:
- **2AE** between components **2093** and **938.**
- **2AC** between components **2093** and **938**.
- **2H** between components **2093** and **938**.
- **3MW** between components **2093** and **938.**

If the connection or connections are faulty and if there is a repair procedure (see **Renault Technical Note 6015A, Repairing electrical wiring, Wiring: Precautions for repair**), repair the wiring, otherwise replace the wiring.

Deal with the **traction battery** faults.

If the fault is still present, contact Techline before replacing the traction battery.

AFTER REPAIR	Follow the instructions. Deal with any other faults. Clear the **stored** faults.

DF135 **DF172** **DF173** **DF174** **DF176** **PRESENT** **OR** **STORED**	60 V BATTERY 1.DEF: Traction battery overvoltage detected by the charger.

NOTES	**Note:** Fault immobilising the vehicle. The voltage of the traction battery is detected by the charger as being above 65 volts.
	Special note: Use the **Wiring Diagrams Technical Note for Twizy**.

Check parameter: **PR155 TRACTION BATTERY VOLTAGE MEASUREMENT** If the value is **above 60 V**, contact the Techline before **replacing the traction battery**. If the value is below **60 V**, discharge the traction battery by half. Check for the fault, if the fault is still present then replace the charger.
If the fault is still present, contact Techline before replacing the traction battery.

AFTER REPAIR	Follow the instructions. Deal with any other faults. Clear the **stored** faults.

DF138 PRESENT OR STORED	CONNECTOR DISCONNECTED

NOTES	**Special notes:** The fault is **present** in activation, charge and traction mode
	Note: In activation mode: no charge or traction. In charge mode: charging stops. In traction mode: traction maintained.
	Special note: Use the **Wiring Diagrams Technical Note for Twizy**. **Apex 280**: is the small orange connector with an interlock on the charger and traction battery side

Check that status **ET295 BCB* interlock** is **Closed**. If the status is **OPEN**, disconnect and reconnect the orange connector of the traction battery (charger/converter side).
To deal with this fault, it is necessary to lock out the vehicle and to use the appropriate safety equipment; see Technical Note 6037A.
Check the condition of the Apex 280 connector between the **charger** and the **traction battery**.
If the fault is still present, replace the charger, component code **2093**.
If the fault is still present, contact the Techline before replacing the **traction battery**, component code **938**.
If the fault is still present, contact the Techline.

*Battery Charger Unit (Charger Computer)

AFTER REPAIR	Follow the instructions. Deal with any other faults. Clear the **stored** faults.

DF491 PRESENT OR STORED	INVERTER SUPPLY RELAY

NOTES	**Special notes:** The fault is **present** during activation, charge mode, during activation of traction mode and when charging.
	Note: – In activation mode: no charge or traction. – In charge mode: charging stops. – In traction mode: traction maintained.
	Special note: Use the **Wiring Diagrams Technical Note for Twizy**.

Connect the vehicle to the **220 V mains supply,** using status **ET323 Inverter supply relay**, and check that the status is **Open**; If status **ET323** is **Closed**, perform the checks below.
To deal with this fault, it is necessary to lock out the vehicle and to use the appropriate safety equipment; see Technical Note 6037A.
Check the **condition** and **connection** of the connectors of the **battery charger unit**, component code **2093**. If the connectors are faulty and if there is a repair procedure (see **Renault Technical Note 6015A, Repairing electrical wiring, Wiring: Precautions for repair**), repair the connectors, otherwise replace the wiring.

AFTER REPAIR	Follow the instructions. Deal with any other faults. Clear the **stored** faults.

DF491 CONTINUED	

Check the **condition** and **connection** of the connectors of the **traction battery unit**, component code **938**. If the connectors are faulty and if there is a repair procedure (see **Renault Technical Note 6015A, Repairing electrical wiring, Wiring: Precautions for repair**), repair the connectors, otherwise replace the wiring.
Check **the continuity and insulation** of the following connections: • **2AE** between components **2093** and **938.** • **2AC** between components **2093** and **938**. • **2H** between components **2093** and **938**. • **3MW** between components **2093** and **938.** If the connection or connections are faulty and if there is a repair procedure (see **Renault Technical Note 6015A, Repairing electrical wiring, Wiring: Precautions for repair**), repair the wiring, otherwise replace the wiring.
If the fault is still present, contact Techline before replacing the **traction battery**.

AFTER REPAIR	Follow the instructions. Deal with any other faults. Clear the **stored** faults.

DF161 PRESENT OR STORED	HIGH VOLTAGE CIRCUIT 1.DEF: Overvoltage detected on the domestic mains power supply when charging the vehicle

NOTES	**Special notes:** The fault is **present** during charging.
	Note: Charging not possible.
	Special note: Use the **Wiring Diagrams Technical Note for Twizy**. **Apex 280**: is the small orange connector with an interlock between the charger and the traction battery.

The charger has detected overvoltage on the domestic mains power supply when charging the vehicle
Carry out a visual inspection of the supply lead. If there are any faults on the charging lead, replace the charging lead.
Check the condition of the Apex 280 connector between the **charger** and the **traction battery**.
If the fault is redundant, ask the customer to check their domestic mains power supply.
If the fault is still present, replace the **charger**, component code **2093**.
If the fault is still present, contact the Techline.

AFTER REPAIR	Follow the instructions. Deal with any other faults. Clear the **stored** faults.

DF162 PRESENT OR STORED	HIGH VOLTAGE CIRCUIT 1.DEF: Undervoltage detected on the domestic mains power supply when charging the vehicle

NOTES	**Special notes:** The fault is **present** during charging.
	Note: Charging not possible.
	Special note: Use the **Wiring Diagrams Technical Note for Twizy**. **Apex 280**: is the small orange connector with an interlock between the charger and the traction battery.

The charger has detected undervoltage on the domestic mains power supply when charging the vehicle
Carry out a visual inspection of the supply lead. If there are any faults on the charging lead, replace the charging lead.
Check the condition of the Apex 280 connector between the **charger** and the **traction battery**.
If the fault is redundant, ask the customer to check their domestic mains power supply.
If the fault is still present, replace the **charger**, component code **2093**.
If the fault is still present, contact the Techline.

AFTER REPAIR	Follow the instructions. Deal with any other faults. Clear the **stored** faults.

TDB_V04_DF162

DF177 PRESENT OR STORED	60 V BATTERY 1.DEF: Open circuit or short circuit.

NOTES	**Special notes:** The fault is **present** in activation mode, charge mode or traction mode.
	Customer complaint: – In activation mode: No charge or traction. – In charge mode: charging interrupted. – In traction mode: traction mode maintained.
	Special note: Use the **Wiring Diagrams Technical Note for Twizy**.
	Note: Fault immobilising the vehicle. **Apex 280**: is the small orange connector with an interlock on the charger and traction battery side **RCS 800**: is the large orange connector with an interlock on the traction battery side, towards the inverter computer

Deal first with the traction battery faults.
Check the charger side interlock status **ET295 BCB* interlock**, this status should be **Closed**. Deal with the faults linked to the interlock.
Check the traction battery charge relay status **ET318: Charger power relay**. If the charging lead is connected or if the vehicle is in + after ignition mode, this status should be **Closed**. Deal with the faults linked to the relay.
To deal with this fault, it is necessary to lock out the vehicle and to use the appropriate safety equipment; see Technical Note 6037A.

*Battery Charger Unit (Charger Computer)

AFTER REPAIR	Follow the instructions. Deal with any other faults. Clear the **stored** faults.

TDB_V04_DF177

DF177 CONTINUED	

Check the condition of the Apex 280 connector between the **charger** and the **traction battery**.
Check the **insulation** to **earth** of the Apex 280 connector between the charger and the **traction battery**.
Check the **condition** and **connection** of the connectors of the **traction battery unit**, component code **938**. If the connectors are faulty and if there is a repair procedure (see **Renault Technical Note 6015A, Repairing electrical wiring, Wiring: Precautions for repair**), repair the connectors, otherwise replace the wiring.
Check **the continuity and insulation** of the following connections: • **2AC** between components **938** and **2093**. • **3MW** between components **938** and **2093**. • **2AE** between components **938** and **2093**. • **2H** between components **938** and **2093**. If the connection or connections are faulty and if there is a repair procedure (see **Renault Technical Note 6015A, Repairing electrical wiring, Wiring: Precautions for repair**), repair the wiring, otherwise replace the wiring.
If the fault is still present, contact Techline before replacing the traction battery.

AFTER REPAIR	Follow the instructions. Deal with any other faults. Clear the **stored** faults.

DF192 **DF193** **DF313** **DF314** **DF315** **DF316** **DF317** **DF318** **DF319** **DF333** **PRESENT** **OR** **STORED**	LBC MULTIPLEX TRANSMISSION ABSENT

NOTES	**Special notes:** The fault is **present in all modes**.
	Note: In activation mode: no charge, no traction, brake light and/or service light on Charge: charging stopped Traction: traction maintained
	Special note: Use the **Wiring Diagrams Technical Note for Twizy**.

Perform fault finding on the multiplex function (see Section 11.1: Multiplexing).
Make sure that the computers installed in the vehicle are the correct type and are compatible with the vehicle. Check that the computers are supplied correctly (earth, + battery, + accessories or + after ignition).
Check the condition of fuses **F02 (5 A)** and **F22 (10 A)** of the **passenger compartment fuse and relay box**, component code **1016**. Replace the fuse if it is defective.

AFTER REPAIR	Follow the instructions. Deal with any other faults. Clear the **stored** faults.

DF192 **DF193** **DF313** **DF314** **DF315** **DF316** **DF317** **DF318** **DF319** **DF333** **CONTINUED 1**	

Check the **connection** and **condition** of the **charger/converter** connectors, component code **2093**. If the connectors are faulty and if there is a repair procedure (see **Renault Technical Note 6015A, Repairing electrical wiring, Wiring: Precautions for repair**), repair the connectors, otherwise replace the wiring.
Check the **connection** and **condition** of the **traction battery** connectors, component code **938**. If the connectors are faulty and if there is a repair procedure (see **Renault Technical Note 6015A, Repairing electrical wiring, Wiring: Precautions for repair**), repair the connectors, otherwise replace the wiring.
Check the **connection** and **condition** of the **diagnostic socket** connectors, component code **225**. If the connectors are faulty and if there is a repair procedure (see **Renault Technical Note 6015A, Repairing electrical wiring, Wiring: Precautions for repair**), repair the connectors, otherwise replace the wiring.
Check the **connection** and **condition** of the **inverter** connectors, component code **1063**. If the connectors are faulty and if there is a repair procedure (see **Renault Technical Note 6015A, Repairing electrical wiring, Wiring: Precautions for repair**), repair the connectors, otherwise replace the wiring.

AFTER REPAIR	Follow the instructions. Deal with any other faults. Clear the **stored** faults.

DF192 **DF193** **DF313** **DF314** **DF315** **DF316** **DF317** **DF318** **DF319** **DF333** **CONTINUED 2**	

Check the **insulation, continuity** and the **absence of interference resistance** of the following connections:
- **133B** between components **2093** and **225**
- **133C** between components **2093** and **225**
- **133B** between components **1063** and **225**
- **133C** between components **1063** and **225**
- **137G** between components **1063** and **938**
- **137H** between components **1063** and **938**

If the connection is faulty and if there is a repair procedure (see **Renault Technical Note 6015A, Repairing electrical wiring, Wiring: Precautions for repair**), repair the wiring, otherwise replace the wiring.

If the fault is still present, contact the Techline before replacing the **traction battery**.

AFTER REPAIR	Follow the instructions. Deal with any other faults. Clear the **stored** faults.

DF298 PRESENT OR STORED	PEB MULTIPLEX TRANSMISSION ABSENT

NOTES	**Special notes:** The fault is **present** in traction mode.
	Special note: Use the **Wiring Diagrams Technical Note for Twizy**.

If the fault status is **stored,** turn a drive wheel and check whether **PR116 Electric motor speed** varies.
Check the connection and condition of the **inverter** connector, component code **1063**. If the connector is faulty and if there is a repair procedure (see **Technical Note 6015A (Renault), Repairing electrical wiring, Wiring: Precautions for repair**), repair the connector, otherwise replace the wiring.
Check the connection and condition of the speed sensor connector on the **traction motor**, component code **262**. If the connector is faulty and if there is a repair procedure (see **Technical Note 6015A (Renault), Repairing electrical wiring, Wiring: Precautions for repair**), repair the connector, otherwise replace the wiring.
Check the **continuity** and the **insulation** of the following connections: • **155A** between components **262** and **1063**. • **155B** between components **262** and **1063**. • **155C** between components **262** and **1063**. • **155D** between components **262** and **1063**. If the connection is faulty and if there is a repair procedure (see **Renault Technical Note 6015A, Repairing electrical wiring, Wiring: Precautions for repair**), repair the wiring, otherwise replace the wiring.

AFTER REPAIR	Follow the instructions. Deal with any other faults. Clear the **stored** faults.

DF298 CONTINUED	

Check the voltage between the following connections:
- **155C** on component **262.**
- **155D** on component **262.**

Expected value: **10 V**
If the value corresponds to the expected value, replace the **speed sensor** on the traction motor.

If the fault is still present, replace the **inverter, component code 1063**.

AFTER REPAIR	Follow the instructions. Deal with any other faults. Clear the **stored** faults.

DF299 PRESENT OR STORED	PEB MULTIPLEX TRANSMISSION ABSENT

NOTES	**Special notes:** The fault is **present** in activation mode and traction mode.
	Note: Service light on. Traction: traction mode maintained.
	Special note: Use the **Wiring Diagrams Technical Note for Twizy**.

Perform fault finding on the multiplex function (see Section 11.1: Multiplexing).
Make sure that the computers installed in the vehicle are the correct type and are compatible with the vehicle. Check that the computers are supplied correctly (earth, + battery, + accessories or + after ignition).
Check the **connection** and **condition** of the **charger/converter** connectors, component code **2093**. If the connectors are faulty and if there is a repair procedure (see **Renault Technical Note 6015A, Repairing electrical wiring, Wiring: Precautions for repair**), repair the connectors, otherwise replace the wiring.
Check the **connection** and **condition** of the **diagnostic socket** connectors, component code **225**. If the connectors are faulty and if there is a repair procedure (see **Renault Technical Note 6015A, Repairing electrical wiring, Wiring: Precautions for repair**), repair the connectors, otherwise replace the wiring.

AFTER REPAIR	Follow the instructions. Deal with any other faults. Clear the **stored** faults.

DF299 CONTINUED	

Check the **connection** and **condition** of the **inverter** connectors, component code **1063**. If the connectors are faulty and if there is a repair procedure (see **Renault Technical Note 6015A, Repairing electrical wiring, Wiring: Precautions for repair**), repair the connectors, otherwise replace the wiring.
Check the **insulation, continuity** and the **absence of interference resistance** of the following connections: • **133B** between components **2093** and **225** • **133C** between components **2093** and **225** • **133B** between components **1063** and **225** • **133C** between components **1063** and **225** If the connection is faulty and if there is a repair procedure (see **Renault Technical Note 6015A, Repairing electrical wiring, Wiring: Precautions for repair**), repair the wiring, otherwise replace the wiring.
If the fault is still present, replace the **inverter, component code 1063**.

AFTER REPAIR	Follow the instructions. Deal with any other faults. Clear the **stored** faults.

DF320 **DF324** **DF427** **DF321** **DF322** **DF325** **PRESENT** **OR** **STORED**	LBC MULTIPLEX TRANSMISSION ABSENT

NOTES	**Special notes:** The fault is **present in all modes**.
	Note: In activation mode: no charge, no traction, brake light and/or service light on Charge: charging stopped Traction: traction maintained
	Special note: Use the **Wiring Diagrams Technical Note for Twizy**.

Perform fault finding on the multiplex function (see Section 11.1: Multiplexing).
Make sure that the computers installed in the vehicle are the correct type and are compatible with the vehicle. Check that the computers are supplied correctly (earth, + battery, + accessories or + after ignition).
To deal with this fault, it is necessary to lock out the vehicle and to use the appropriate safety equipment; see Technical Note 6037A.
Check the **connection** and **condition** of the **charger/converter** connectors, component code **2093**. If the connectors are faulty and if there is a repair procedure (see **Renault Technical Note 6015A, Repairing electrical wiring, Wiring: Precautions for repair**), repair the connectors, otherwise replace the wiring.

AFTER REPAIR	Follow the instructions. Deal with any other faults. Clear the **stored** faults.

DF320 **DF324** **DF427** **DF321** **DF322** **DF325** **CONTINUED**	

Check the **insulation, continuity** and the **absence of interference resistance** of the following connections:
- **133B** between components **2093** and **225**
- **133C** between components **2093** and **225**

If the connection is faulty and if there is a repair procedure (see **Renault Technical Note 6015A, Repairing electrical wiring, Wiring: Precautions for repair**), repair the wiring, otherwise replace the wiring.

If the fault is still present, contact the Techline before replacing the **traction battery, component code 938**.

AFTER REPAIR	Follow the instructions. Deal with any other faults. Clear the **stored** faults.

DF323 PRESENT OR STORED	LBC MULTIPLEX TRANSMISSION ABSENT

NOTES	**Special notes:** The fault is **present** in activation mode and charge mode.
	Note: In activation mode: no charge, no traction, brake light and/or service light on – Charge: charging stopped
	Special note: Use the **Wiring Diagrams Technical Note for Twizy**.

Deal first with the traction battery faults.
Perform fault finding on the multiplex function (see Section 11.1: Multiplexing).
Check the charger side interlock status **ET295 BCB* interlock**, this status should be **Closed**. Deal with the faults linked to the interlock.
To deal with this fault, it is necessary to lock out the vehicle and to use the appropriate safety equipment; see Technical Note 6037A.

*Battery Charger Unit (Charger Computer)

AFTER REPAIR	Follow the instructions. Deal with any other faults. Clear the **stored** faults.

DF323 CONTINUED	

Check the **connection** and **condition** of the **charger/converter** connectors, component code **2093**. If the connectors are faulty and if there is a repair procedure (see **Renault Technical Note 6015A, Repairing electrical wiring, Wiring: Precautions for repair**), repair the connectors, otherwise replace the wiring.
Check the **insulation, continuity** and the **absence of interference resistance** of the following connections: • **133B** between components **2093** and **225** • **133C** between components **2093** and **225** If the connection is faulty and if there is a repair procedure (see **Renault Technical Note 6015A, Repairing electrical wiring, Wiring: Precautions for repair**), repair the wiring, otherwise replace the wiring.
If the fault is still present, contact the Techline.

AFTER REPAIR	Follow the instructions. Deal with any other faults. Clear the **stored** faults.

DF326 PRESENT OR STORED	LBC MULTIPLEX TRANSMISSION ABSENT

NOTES	**Special notes:** The fault is in activation mode.
	Special note: Use the **Wiring Diagrams Technical Note for Twizy**.

With the ignition switched off, the vehicle must not be in charge mode; remove **fuse F2** (**60 A**) from the **passenger compartment fuse and relay box**, component code **1016**, wait **2 minutes** and then refit the fuse.
If the fault is still present, contact the Techline.

AFTER REPAIR	Follow the instructions. Deal with any other faults. Clear the **stored** faults.

DF347 PRESENT OR STORED	DCDC 14 V OUTPUT 1. DEF: 12 V battery overvoltage

NOTES	**Special notes:** The fault is **present** in activation, charge and traction mode.
	Note: – In activation mode: No charge or traction. – In charge mode: charging interrupted. – In traction mode: traction mode maintained.
	Special note: Use the **Wiring Diagrams Technical Note for Twizy**.

Check the auxiliary battery using a multimeter. If the voltage is greater than 16 V, replace the auxiliary battery.
If the fault is still present, contact the Techline.

AFTER REPAIR	Follow the instructions. Deal with any other faults. Clear the **stored** faults.

DF348 PRESENT OR STORED	DCDC 14 V OUTPUT 1.DEF: 12 V battery undervoltage during vehicle activation

NOTES	**Special notes:** The fault is **present** in activation mode.
	Note: – In activation mode at the time of a charge request: no effect on the system. – In activation mode at the time of a traction request: traction mode is not possible.
	Special note: Use the **Wiring Diagrams Technical Note for Twizy**.

Check the **auxiliary battery** using a multimeter. If the voltage is less than **8 V**, replace the auxiliary battery.
If the fault is still present, contact the Techline.

AFTER REPAIR	Follow the instructions. Deal with any other faults. Clear the **stored** faults.

DF349 PRESENT OR STORED	DCDC 14 V OUTPUT 1.DEF: 12 Volt battery undervoltage

NOTES	**Special notes:** The fault is **present** when charging and in traction mode.
	Note: – In charge mode: charging interrupted. – In traction mode: traction mode maintained.
	Special note: Use the **Wiring Diagrams Technical Note for Twizy**.

Check the **auxiliary battery** using a multimeter. If the voltage is less than **8 V**, replace the auxiliary battery.
If the fault is still present, contact the Techline.

AFTER REPAIR	Follow the instructions. Deal with any other faults. Clear the **stored** faults.

DF351 PRESENT OR STORED	DCDC 14 V OUTPUT 1. DEF: Polarity inversion

NOTES	**Special notes:** The fault is **present** in activation mode.
	Note: – In activation mode: charging not possible.
	Special note: Use the **Wiring Diagrams Technical Note for Twizy**.

Switch off the ignition and check that there is no power consumer.
Check the battery using the **Midtronics R330** tool (**Elé. 1593**).
– The message is **Battery OK** + **recharge** or **Charge + retest**: recharge the battery.
– The message is **Test impossible**: If the message appears for the first time, check that the tool is correctly connected to the auxiliary battery, check that there is no power consumer and re-test using the **Midtronics tool**. If the message appears more than once, check that the test was carried out with the battery disconnected. If it was, replace the battery; if it was not, disconnect the battery (starting with the earth) then perform another test using the **Midtronics tool**.
If the fault is still present, contact the Techline.

AFTER REPAIR	Follow the instructions. Deal with any other faults. Clear the **stored** faults.

DF352 **DF443** **DF444** **PRESENT** **OR** **STORED**	DCDC 14 V OUTPUT

NOTES	**Special notes:** The fault is **present** in activation mode, charge mode and traction mode.
	Note: – During system activation: charging not possible. – During charge mode: charging not possible. – During traction mode: traction maintained.
	Special note: Use the **Wiring Diagrams Technical Note for Twizy**.

Check the condition of fuse **F02 (60 A) of the passenger compartment fuse and relay box**, component code **1016**. Replace the fuse if it is defective.
Check that the auxiliary battery is not in short circuit. If the auxiliary battery is in short circuit, replace the auxiliary battery.
Check the **condition** and **connection** of the connectors of the **battery charger unit**, component code **2093**. If the connectors are faulty and if there is a repair procedure (see **Renault Technical Note 6015A, Repairing electrical wiring, Wiring: Precautions for repair**), repair the connectors, otherwise replace the wiring.

AFTER REPAIR	Follow the instructions. Deal with any other faults. Clear the **stored** faults.

DF352 **DF443** **DF444** **CONTINUED**	

Check the **condition** and **connection** of the **passenger compartment fuse box** connectors, component code **1016**. If the connectors are faulty and if there is a repair procedure (see **Renault Technical Note 6015A, Repairing electrical wiring, Wiring: Precautions for repair**), repair the connectors, otherwise replace the wiring.
Check the **continuity and insulation** of the following connections: • **BP25** between components **1016** and **2093**. • **ML** between components **1016** and **2093**. If the connection or connections are faulty and if there is a repair procedure (see **Renault Technical Note 6015A, Repairing electrical wiring, Wiring: Precautions for repair**), repair the wiring, otherwise replace the wiring.
If the fault is still present, contact the Techline.

AFTER REPAIR	Follow the instructions. Deal with any other faults. Clear the **stored** faults.

DF362 PRESENT OR STORED	COMPUTER INTERNAL TEMPERATURE

NOTES	**Special notes:** The fault is **present** in activation, charge and traction mode. The fault relates to a fault on one of the two internal temperature sensors inside the charger.
	Note: Retry the test after a pause. – In activation mode: no charge or traction. – Charge: charging stopped – Traction: traction stopped for **120 seconds**.
	Special note: Use the **Wiring Diagrams Technical Note for Twizy**.

If the status **ET331 Computer internal temperature** is **Fault**, leave the charger to cool down and then check that status **ET331** is **Correct**.
If the fault is still present, contact the Techline.

AFTER REPAIR	Follow the instructions. Deal with any other faults. Clear the **stored** faults.

DF363 PRESENT OR STORED	COMPUTER INTERNAL TEMPERATURE

NOTES	**Special notes:** The fault is **present** in activation, charge and traction mode.
	Note: Retry the test after a pause. – In activation mode: no charge or traction. – Charge: charging stopped – Traction: traction stopped for **120 seconds**.
	Special note: Use the **Wiring Diagrams Technical Note for Twizy**.

If the status **ET331 Computer internal temperature** is **Fault**, leave the charger to cool down and then check that status **ET331** is **Correct**.
If the fault is still present, contact the Techline.

AFTER REPAIR	Follow the instructions. Deal with any other faults. Clear the **stored** faults.

DF445 PRESENT OR STORED	TRACTION BATTERY VOLTAGE MEASUREMENT

NOTES	**Special notes:** The fault is **present** in activation, charge and traction mode.
	Special note: Use the **Wiring Diagrams Technical Note for Twizy**.

With the ignition switched off, the vehicle must not be in charge mode; remove **fuse F2** (**60 A**) from the **passenger compartment fuse and relay box**, component code **1016**, wait **2 minutes** and then refit the fuse.
If the fault is still present, contact the Techline.

AFTER REPAIR	Follow the instructions. Deal with any other faults. Clear the **stored** faults.

DF434 PRESENT OR STORED	LBC MULTIPLEX TRANSMISSION ABSENT

NOTES	**Special notes:** The fault is recorded as present after the orange connector of the traction battery has been disconnected (inverter side).
	Note: Fault immobilising the vehicle.
	Special note: Use the **Wiring Diagrams Technical Note for Twizy**.

Check that the status **ET312 PEB* interlock** is **Closed**. If status **ET312** is **Open**, disconnect and reconnect the orange connector of the traction battery (inverter side).
To deal with this fault, it is necessary to lock out the vehicle and to use the appropriate safety equipment; see Technical Note 6037A.
Check the condition and connection of the orange connector of the **traction battery**, component code **938**. If the connectors are faulty and if there is a repair procedure (see **Renault Technical Note 6015A, Electrical wiring repair, Wiring: Precautions for repair**), repair the connectors, otherwise replace the wiring.
If the fault is still present, contact the Techline before replacing the **traction battery, component code 938**.
Perform fault finding on the multiplex function (see **88B Multiplexing**).
If the fault is still present, contact Techline before replacing the traction battery.

AFTER REPAIR	Follow the instructions. Deal with any other faults. Clear the **stored** faults.

DF528 PRESENT OR STORED	INTERNAL FAULT 1.DEF: Charger internal fault

NOTES	**Special notes:** The fault affects the external fan of the charger The fault is **present in all modes**.
	Special note: Use the **Wiring Diagrams Technical Note for Twizy**.

Put the vehicle on charge and check for fault.
Check that there are no foreign bodies preventing the fan from working properly.
Put back the vehicle back on charge and check for the fault again.
If the vehicle has been driven through water, dry the area around the fan to remove excess water and wait until the area is dry. Check for the fault again during charging.
If the fault is still present, replace the external fan kit of the charger.
After the repair, check that the fault is no longer present during charging.
If the fault is still present, contact Techline before replacing the charger.

AFTER REPAIR	Follow the instructions. Deal with any other faults. Clear the **stored** faults.

DF508 **DF527** **DF529** **DF531** **DF530** **DF554** **DF532** **PRESENT** **OR** **STORED**	INTERNAL FAULT 1.DEF: Charger internal fault

NOTES	**Special notes:** The fault is **present in all modes**.
	Special note: Use the **Wiring Diagrams Technical Note for Twizy**.

Place the vehicle on charge; can you hear the charger fan?
If the fault is still present, contact Techline before replacing the charger.

AFTER REPAIR	Follow the instructions. Deal with any other faults. Clear the **stored** faults.

DF539 PRESENT OR STORED	INTERNAL FAULT 1.DEF: Charger internal fault

NOTES	**Special notes:** The fault is **present in all modes**.
	Special note: Use the **Wiring Diagrams Technical Note for Twizy**.

Check the condition of fuse **F13 (5 A)** of the **passenger compartment fuse and relay box**, component code **1016**. Replace the fuse if it is defective. If the fuse blows again, check the insulation of the following line: **AP3** between components **1016** and **104**.
Check the condition of fuse **F01 (50 A)** of the **passenger compartment fuse and relay box**, component code **1016**. Replace the fuse if it is defective. Check the condition of fuse **F02 (60 A) of the passenger compartment fuse and relay box**, component code **1016**. Replace the fuse if it is defective.
Check the **insulation, continuity** and the **absence of interference resistance** of the following connections: • **BP25** between components **1792** and **2093**. If the connection is faulty and if there is a repair procedure (see **Renault Technical Note 6015A, Repairing electrical wiring, Wiring: Precautions for repair**), repair the wiring, otherwise replace the wiring.

AFTER REPAIR	Follow the instructions. Deal with any other faults. Clear the **stored** faults.

TDB_V04_DF539

DF539 CONTINUED	

Check the **insulation, continuity** and the **absence of interference resistance** of the following connections: • **2AE** between components **938** and **2093**. If the connection is faulty and if there is a repair procedure (see **Renault Technical Note 6015A, Repairing electrical wiring, Wiring: Precautions for repair**), repair the wiring, otherwise replace the wiring.
Switch off the ignition for 2 minutes, switch on the ignition again and check if the fault is still present.
If the fault is still present, contact Techline before replacing the charger.

AFTER REPAIR	Follow the instructions. Deal with any other faults. Clear the **stored** faults.

3. Faults linked to the BMS/Traction Battery

Tool fault	Diagnostic tool title
DF024	MULTIPLEX LINE COMMUNICATION
DF113	TRACTION BATTERY TRAY TEMPERATURE
DF114	PEB INTERLOCK
DF144	BATTERY TRAY OVERVOLTAGE LEVEL 1
DF145	BATTERY TRAY OVERVOLTAGE LEVEL 2
DF146	BATTERY TRAY UNDERVOLTAGE LEVEL 1
DF147	BATTERY TRAY UNDERVOLTAGE LEVEL 2
DF148	BATTERY TRAY UNDERVOLTAGE LEVEL 3
DF149	BATTERY TRAY CURRENT
DF377	
DF153	BCB INTERLOCK
DF158	CELL OVERVOLTAGE
DF551	
DF160	CELL SECOND OVERVOLTAGE
DF166	CELL VOLTAGE DIFFERENCE WHEN STARTING
DF167	INCONSISTENCY BETWEEN CELL AND MODULE VOLTAGE
DF168	CELL LINE UNDERVOLTAGE
DF240	CELL OVERVOLTAGE
DF249	CELL UNDERVOLTAGE

3. Faults linked to the BMS/Traction Battery (continued 1)

Tool fault	Diagnostic tool title
DF250	CELL UNDERVOLTAGE
DF251	CELL UNDERVOLTAGE
DF252	CELL UNDERVOLTAGE
DF268	BCB MULTIPLEX TRANSMISSION ABSENT
DF327	LBC MULTIPLEX TRANSMISSION ABSENT
DF328	
DF329	
DF372	TRACTION BATTERY TRAY TEMPERATURE
DF373	
DF404	60 V BATTERY
DF543	LBC
DF245	BATTERY CELL No. 1 VOLTAGE
DF246	BATTERY CELL No. 2 VOLTAGE
DF247	BATTERY CELL No. 3 VOLTAGE
DF248	BATTERY CELL No. 4 VOLTAGE
DF498	BATTERY CELL No. 5 VOLTAGE
DF499	BATTERY CELL No. 6 VOLTAGE
DF500	BATTERY CELL No. 7 VOLTAGE
DF501	BATTERY CELL No. 8 VOLTAGE
DF502	BATTERY CELL No. 9 VOLTAGE

3. Faults linked to the BMS/Traction Battery (continued 2)

DF503	BATTERY CELL No. 10 VOLTAGE
DF504	BATTERY CELL No. 11 VOLTAGE
DF505	BATTERY CELL No. 12 VOLTAGE
DF506	BATTERY CELL No. 13 VOLTAGE
DF507	BATTERY CELL No. 14 VOLTAGE
DF513	BATTERY CELL No. 1 VOLTAGE
DF514	BATTERY CELL No. 2 VOLTAGE
DF515	BATTERY CELL No. 3 VOLTAGE
DF516	BATTERY CELL No. 4 VOLTAGE
DF517	BATTERY CELL No. 5 VOLTAGE
DF518	BATTERY CELL No. 6 VOLTAGE
DF519	BATTERY CELL No. 7 VOLTAGE
DF520	BATTERY CELL No. 8 VOLTAGE
DF521	BATTERY CELL No. 9 VOLTAGE
DF522	BATTERY CELL No. 10 VOLTAGE
DF523	BATTERY CELL No. 11 VOLTAGE
DF524	BATTERY CELL No. 12 VOLTAGE
DF525	BATTERY CELL No. 13 VOLTAGE
DF526	BATTERY CELL No. 14 VOLTAGE

DF215 PRESENT OR STORED	TEMPERATURE SENSOR CIRCUIT

NOTES	**Special notes:** The fault is recorded as present in charge mode and traction mode.
	Note: The fault is linked to the traction battery internal temperature. The vehicle will not start.
	Special note: Use the **Wiring Diagrams Technical Note for Twizy**.

Replace the **traction battery 938**.
If the fault is still present, contact the Techline.

AFTER REPAIR	Follow the instructions. Deal with any other faults. Clear the **stored** faults.

TDB_V04_DF215

DF543 PRESENT OR STORED	LBC

NOTES	**Special notes:** The fault is recorded as present in charge mode and normal mode.
	Note: The vehicle will not start The fault is an internal fault in the traction battery computer
	Special note: Use the **Wiring Diagrams Technical Note for Twizy**.

Switch the ignition off and then on again. If the fault is still present, contact Techline before replacing the traction battery.

AFTER REPAIR	Follow the instructions. Deal with any other faults. Clear the **stored** faults.

DF245	BATTERY CELL NO. 1 VOLTAGE
DF246	BATTERY CELL NO. 2 VOLTAGE
DF247	BATTERY CELL NO. 3 VOLTAGE
DF248	BATTERY CELL NO. 4 VOLTAGE
DF498	BATTERY CELL NO. 5 VOLTAGE
DF499	BATTERY CELL NO. 6 VOLTAGE
DF500	BATTERY CELL NO. 7 VOLTAGE
DF501	BATTERY CELL NO. 8 VOLTAGE
DF502	BATTERY CELL NO. 9 VOLTAGE
DF503	BATTERY CELL NO. 10 VOLTAGE
DF504	BATTERY CELL NO. 11 VOLTAGE
DF505	BATTERY CELL NO. 12 VOLTAGE
DF506	BATTERY CELL NO. 13 VOLTAGE
DF507	BATTERY CELL NO. 14 VOLTAGE
PRESENT OR STORED	

NOTES	**Special notes:** The fault is recorded as present in charge mode and normal mode.
	Note: The undervoltage is level 1; the voltage of a traction battery cell has dropped below 3.0 V Reduction in vehicle performance.
	Special note: Use the **Wiring Diagrams Technical Note for Twizy**.

AFTER REPAIR	Follow the instructions. Deal with any other faults. Clear the **stored** faults.

TDB_V04_DF245/TDB_V04_DF246/TDB_V04_DF247/TDB_V04_DF248/TDB_V04_DF498/TDB_V04_DF499/TDB_V04_DF500/
TDB_V04_DF501/TDB_V04_DF502/TDB_V04_DF503/TDB_V04_DF504/TDB_V04_DF505/TDB_V04_DF506/TDB_V04_DF507

DF245 **DF246** **DF247** **DF248** **DF498** **DF499** **DF500** **DF501** **DF502** **DF503** **DF504** **DF505** **DF506** **DF507** **CONTINUED**	

Recharge the traction battery. If the fault recurs, contact the Techline before replacing the traction battery.
To deal with this fault, it is necessary to lock out the vehicle and to use the appropriate safety equipment; see Technical Note 6037A.
Replace the **traction battery, component code 938**.
If the fault is still present, contact the Techline.

AFTER REPAIR	Follow the instructions. Deal with any other faults. Clear the **stored** faults.

DF513	BATTERY CELL NO. 1 VOLTAGE
DF514	BATTERY CELL NO. 2 VOLTAGE
DF515	BATTERY CELL NO. 3 VOLTAGE
DF516	BATTERY CELL NO. 4 VOLTAGE
DF517	BATTERY CELL NO. 5 VOLTAGE
DF518	BATTERY CELL NO. 6 VOLTAGE
DF519	BATTERY CELL NO. 7 VOLTAGE
DF520	BATTERY CELL NO. 8 VOLTAGE
DF521	BATTERY CELL NO. 9 VOLTAGE
DF522	BATTERY CELL NO. 10 VOLTAGE
DF523	BATTERY CELL NO. 11 VOLTAGE
DF524	BATTERY CELL NO. 12 VOLTAGE
DF525	BATTERY CELL NO. 13 VOLTAGE
DF526	BATTERY CELL NO. 14 VOLTAGE
PRESENT OR STORED	

NOTES	**Special notes:** The fault is recorded as present in charge mode and normal mode.
	Note: The undervoltage is level 4; the voltage of a traction battery cell has dropped below 2.0 V Reduction in vehicle performance.
	Special note: Use the **Wiring Diagrams Technical Note for Twizy**.

AFTER REPAIR	Follow the instructions. Deal with any other faults. Clear the **stored** faults.

TDB_V04_DF513/TDB_V04_DF514/TDB_V04_DF515/TDB_V04_DF516/TDB_V04_DF517/TDB_V04_DF518/TDB_V04_DF519/
TDB_V04_DF520/TDB_V04_DF521/TDB_V04_DF522/TDB_V04_DF523/TDB_V04_DF524/TDB_V04_DF525/TDB_V04_DF526

DF513 **DF514** **DF515** **DF516** **DF517** **DF518** **DF519** **DF520** **DF521** **DF522** **DF523** **DF524** **DF525** **DF526** **CONTINUED**	

To deal with this fault, it is necessary to lock out the vehicle and to use the appropriate safety equipment; see Technical Note 6037A.
Replace the **traction battery, component code 938**.
If the fault is still present, contact the Techline.

AFTER REPAIR	Follow the instructions. Deal with any other faults. Clear the **stored** faults.

DF024 PRESENT OR STORED	MULTIPLEX LINE COMMUNICATION

NOTES	**Special notes:** The fault is recorded as present in charge mode and normal mode.
	Note: The vehicle will not start The fault is an internal fault in the traction battery computer
	Special note: Use the **Wiring Diagrams Technical Note for Twizy**.

Switch the ignition off and then on again. If the fault is still present, contact Techline before replacing the traction battery.

AFTER REPAIR	Follow the instructions. Deal with any other faults. Clear the **stored** faults.

TDB_V04_DF024

DF113 PRESENT OR STORED	TRACTION BATTERY TRAY TEMPERATURE

NOTES	**Special notes:** The fault is recorded as present after one occurrence of high temperature of the battery tray.
	Note: Reduction in vehicle performance.
	Special note: Use the **Wiring Diagrams Technical Note for Twizy**.

Leave the vehicle to cool down.
To deal with this fault, it is necessary to lock out the vehicle and to use the appropriate safety equipment; see Technical Note 6037A.
Replace the **traction battery 938**
If the fault is still present, contact the Techline.

AFTER REPAIR	Follow the instructions. Deal with any other faults. Clear the **stored** faults.

DF114 PRESENT OR STORED	PEB INTERLOCK

NOTES	**Special notes:** The fault is recorded as present after the orange connector of the traction battery has been disconnected (inverter side).
	Note: Fault immobilising the vehicle.
	Special note: Use the **Wiring Diagrams Technical Note for Twizy**.

Check that status **ET312 PEB* interlock** " is **Closed**. If status **ET312** is **Open**, disconnect and reconnect the orange connector of the traction battery (inverter side).
To deal with this fault, it is necessary to lock out the vehicle and to use the appropriate safety equipment; see Technical Note 6037A.
Check the **condition** and **connection** of the orange connector of the **traction battery**, component code **938**. If the connectors are faulty and if there is a repair procedure (see **Renault Technical Note 6015A, Repairing electrical wiring, Wiring: Precautions for repair**), repair the connectors, otherwise replace the wiring.
If the fault is still present, contact Techline before replacing the **traction battery 938**
If the fault is still present, contact the Techline.

*Power Electronic Block (Inverter Computer)

AFTER REPAIR	Follow the instructions. Deal with any other faults. Clear the **stored** faults.

TDB_V04_DF114

DF144 PRESENT OR STORED	BATTERY TRAY OVERVOLTAGE LEVEL 1

NOTES	**Special notes:** The fault is recorded as present in charge mode and normal mode.
	Note: A warning is sent to the driver Vehicle charging is prohibited. There is no battery regeneration.
	Check that the CLIP diagnostic tool update is recent enough to be able to deal with faults on the vehicle.

To deal with this fault, it is necessary to lock out the vehicle and to use the appropriate safety equipment; see Technical Note 6037A.
Replace the **traction battery 938**
If the fault is still present, contact the Techline.

AFTER REPAIR	Follow the instructions. Deal with any other faults. Clear the **stored** faults.

TDB_V04_DF144

DF145 PRESENT OR STORED	BATTERY TRAY OVERVOLTAGE LEVEL 2

NOTES	**Special notes:** The fault is recorded as present in charge mode.
	Note: Immobilising fault.
	Check that the CLIP diagnostic tool update is recent enough to be able to deal with faults on the vehicle.
	Special note: Use the **Wiring Diagrams Technical Note for Twizy**.

To deal with this fault, it is necessary to lock out the vehicle and to use the appropriate safety equipment; see Technical Note 6037A.
Replace the **traction battery 938**
If the fault is still present, contact the Techline.

AFTER REPAIR	Follow the instructions. Deal with any other faults. Clear the **stored** faults.

TDB_V04_DF145

DF146 PRESENT OR STORED	BATTERY TRAY UNDERVOLTAGE LEVEL 1

NOTES	**Special notes:** The fault is recorded as present in charge mode and normal mode.
	Note: Reduction in vehicle performance.
	Special note: Use the **Wiring Diagrams Technical Note for Twizy**.

To deal with this fault, it is necessary to lock out the vehicle and to use the appropriate safety equipment; see Technical Note 6037A.
Replace the **traction battery 938**
If the fault is still present, contact the Techline.

AFTER REPAIR	Follow the instructions. Deal with any other faults. Clear the **stored** faults.

TDB_V04_DF146

DF147 PRESENT OR STORED	BATTERY TRAY UNDERVOLTAGE LEVEL 2

NOTES	**Special notes:** The fault is recorded as present in charge mode and normal mode.
	Note: Fault immobilising the vehicle.
	Special note: Use the **Wiring Diagrams Technical Note for Twizy**.

To deal with this fault, it is necessary to lock out the vehicle and to use the appropriate safety equipment; see Technical Note 6037A.
Replace the **traction battery 938**
If the fault is still present, contact the Techline.

AFTER REPAIR	Follow the instructions. Deal with any other faults. Clear the **stored** faults.

TDB_V04_DF147

DF148 PRESENT OR STORED	BATTERY TRAY UNDERVOLTAGE LEVEL 3

NOTES	**Special notes:** The fault is recorded as present in charge mode and normal mode.
	Note: Fault immobilising the vehicle.
	Special note: Use the **Wiring Diagrams Technical Note for Twizy**.

To deal with this fault, it is necessary to lock out the vehicle and to use the appropriate safety equipment; see Technical Note 6037A.
Replace the **traction battery 938**
If the fault is still present, contact the Techline.

AFTER REPAIR	Follow the instructions. Deal with any other faults. Clear the **stored** faults.

TDB_V04_DF148

DF149 **DF377** **PRESENT** **OR** **STORED**	BATTERY TRAY CURRENT

NOTES	**Special notes:** The fault is recorded as present in charge mode and normal mode.
	Note: Impossible to charge the vehicle. Fault immobilising the vehicle.
	Special note: Use the **Wiring Diagrams Technical Note for Twizy**.

To deal with this fault, it is necessary to lock out the vehicle and to use the appropriate safety equipment; see Technical Note 6037A.
Replace the **traction battery 938**
If the fault is still present, contact the Techline.

AFTER REPAIR	Follow the instructions. Deal with any other faults. Clear the **stored** faults.

DF153 PRESENT OR STORED	BCB INTERLOCK

NOTES	**Special notes:** The fault is recorded as present after the orange connector of the traction battery has been disconnected (charger/converter side).
	Note: Fault immobilising the vehicle.
	Special note: Use the **Wiring Diagrams Technical Note for Twizy**.

Check that status **ET295 BCB* interlock** is **CLOSED**. If the status is **OPEN**, disconnect and reconnect the orange connector of the traction battery (charger/converter side).
To deal with this fault, it is necessary to lock out the vehicle and to use the appropriate safety equipment; see Technical Note 6037A.
Check the **condition** and **connection** of the orange connector of the **traction battery**, component code **938**. If the connectors are faulty and if there is a repair procedure (see **Renault Technical Note 6015A, Repairing electrical wiring, Wiring: Precautions for repair**), repair the connectors, otherwise replace the wiring.
If the fault is still present, contact the Techline before replacing the **traction battery 938**.
If the fault is still present, contact the Techline.

*Battery Charge Block (Charger Computer)

AFTER REPAIR	Follow the instructions. Deal with any other faults. Clear the **stored** faults.

TDB_V04_DF153

DF158 PRESENT OR STORED	CELL OVERVOLTAGE 1DEF: Level 1

NOTES	**Special notes:** The fault is recorded when charging.
	Note: Impossible to recharge the traction battery.
	Check that the CLIP diagnostic tool update is recent enough to be able to deal with faults on the vehicle.
	Special note: Use the **Wiring Diagrams Technical Note for Twizy**.

To deal with this fault, it is necessary to lock out the vehicle and to use the appropriate safety equipment; see Technical Note 6037A.
Replace the **traction battery 938**
If the fault is still present, contact the Techline.

AFTER REPAIR	Follow the instructions. Deal with any other faults. Clear the **stored** faults.

TDB_V04_DF158

DF551 PRESENT OR STORED	CELL OVERVOLTAGE

NOTES	**Special notes:** The fault is recorded as present during charge mode.
	Note: The fault occurred when charging the vehicle Impossible to recharge the traction battery.
	Check that the CLIP diagnostic tool update is recent enough to be able to deal with faults on the vehicle.
	Special note: Use the **Wiring Diagrams Technical Note for Twizy**.

To deal with this fault, it is necessary to lock out the vehicle and to use the appropriate safety equipment; see Technical Note 6037A.
Replace the **traction battery 938**
If the fault is still present, contact the Techline.

AFTER REPAIR	Follow the instructions. Deal with any other faults. Clear the **stored** faults.

TDB_V04_DF551

DF160 PRESENT OR STORED	CELL SECOND OVERVOLTAGE

NOTES	**Special notes:** The fault is present in charge mode.
	Note: Traction mode is impossible.
	Special note: Use the **Wiring Diagrams Technical Note for Twizy**.

To deal with this fault, it is necessary to lock out the vehicle and to use the appropriate safety equipment; see Technical Note 6037A.
Replace the **traction battery 938**
If the fault is still present, contact the Techline.

AFTER REPAIR	Follow the instructions. Deal with any other faults. Clear the **stored** faults.

TDB_V04_DF160

DF166 PRESENT OR STORED	CELL VOLTAGE DIFFERENCE WHEN STARTING

NOTES	**Special notes:** The fault is recorded as present in charge mode and normal mode.
	Note: Fault immobilising the vehicle.
	Special note: Use the **Wiring Diagrams Technical Note for Twizy**.

To deal with this fault, it is necessary to lock out the vehicle and to use the appropriate safety equipment; see Technical Note 6037A.
Replace the **traction battery 938**
If the fault is still present, contact the Techline.

AFTER REPAIR	Follow the instructions. Deal with any other faults. Clear the **stored** faults.

TDB_V04_DF166

DF167 PRESENT OR STORED	INCONSISTENCY BETWEEN CELL AND MODULE VOLTAGE

NOTES	**Special notes:** The fault is recorded as present in charge mode.
	Special note: Use the **Wiring Diagrams Technical Note for Twizy**.

To deal with this fault, it is necessary to lock out the vehicle and to use the appropriate safety equipment; see Technical Note 6037A.
Replace the **traction battery 938**
If the fault is still present, contact the Techline.

AFTER REPAIR	Follow the instructions. Deal with any other faults. Clear the **stored** faults.

TDB_V04_DF167

DF168 PRESENT OR STORED	CELL LINE UNDERVOLTAGE

NOTES	**Note:** Fault immobilising the vehicle.
	Special note: Use the **Wiring Diagrams Technical Note for Twizy**.

Switch the ignition off and then on again. If the fault is still present, contact Techline before replacing the traction battery.
To deal with this fault, it is necessary to lock out the vehicle and to use the appropriate safety equipment; see Technical Note 6037A.
Replace the **traction battery 938**
If the fault is still present, contact the Techline.

AFTER REPAIR	Follow the instructions. Deal with any other faults. Clear the **stored** faults.

TDB_V04_DF168

DF240 PRESENT OR STORED	CELL OVERVOLTAGE

NOTES	**Note:** The fault is **present** in normal mode.
	Note: If this fault is present, the vehicle will not start. The overvoltage is level 2; the voltage of a traction battery cell has risen above **4.4 V**.
	Special note: Use the **Wiring Diagrams Technical Note for Twizy**.

To deal with this fault, it is necessary to lock out the vehicle and to use the appropriate safety equipment; see Technical Note 6037A.
Replace the **traction battery 938**
If the fault is still present, contact the Techline.

AFTER REPAIR	Follow the instructions. Deal with any other faults. Clear the **stored** faults.

TDB_V04_DF240

DF249 PRESENT OR STORED	CELL UNDERVOLTAGE

NOTES	**Note:** The fault is recorded as **present** in charge mode and normal mode.
	Note: The undervoltage is level 1; the voltage of a traction battery cell has dropped below 3 V Reduction in vehicle performance.
	Special note: Use the **Wiring Diagrams Technical Note for Twizy**.

Recharge the traction battery. If the fault recurs, contact the Techline before replacing the traction battery.
To deal with this fault, it is necessary to lock out the vehicle and to use the appropriate safety equipment; see Technical Note 6037A.
Replace the **traction battery 938**
If the fault is still present, contact the Techline.

AFTER REPAIR	Follow the instructions. Deal with any other faults. Clear the **stored** faults.

TDB_V04_DF249

DF250 PRESENT OR STORED	CELL UNDERVOLTAGE

NOTES	**Note:** The fault is recorded as **present** in charge mode and normal mode.
	Note: The undervoltage is level 2; the voltage of a traction battery cell has dropped below 2.8 V Reduction in vehicle performance.
	Special note: Use the **Wiring Diagrams Technical Note for Twizy**.

To deal with this fault, it is necessary to lock out the vehicle and to use the appropriate safety equipment; see Technical Note 6037A.
Replace the **traction battery 938**
If the fault is still present, contact the Techline.

AFTER REPAIR	Follow the instructions. Deal with any other faults. Clear the **stored** faults.

DF251 PRESENT OR STORED	CELL UNDERVOLTAGE

NOTES	**Note:** The fault is recorded as **present** in charge mode and normal mode.
	Note: The undervoltage is level 3; the voltage of a cell has dropped below 2.5 V. Reduction in vehicle performance. Immobilising fault.
	Special note: Use the **Wiring Diagrams Technical Note for Twizy**.

To deal with this fault, it is necessary to lock out the vehicle and to use the appropriate safety equipment; see Technical Note 6037A.
Replace the **traction battery 938**
If the fault is still present, contact the Techline.

AFTER REPAIR	Follow the instructions. Deal with any other faults. Clear the **stored** faults.

TDB_V04_DF251

DF252 PRESENT OR STORED	CELL UNDERVOLTAGE

NOTES	**Note:** The fault is recorded as **present** in charge mode and normal mode.
	Note: The undervoltage is level 4; the voltage of a cell has dropped below 2 V Reduction in vehicle performance.
	Special note: Use the **Wiring Diagrams Technical Note for Twizy**.

To deal with this fault, it is necessary to lock out the vehicle and to use the appropriate safety equipment; see Technical Note 6037A.
Replace the **traction battery 938**
If the fault is still present, contact the Techline.

AFTER REPAIR	Follow the instructions. Deal with any other faults. Clear the **stored** faults.

TDB_V04_DF252

DF268 PRESENT OR STORED	BCB MULTIPLEX TRANSMISSION ABSENT

NOTES	**Note:** The fault is **present in all contexts**.
	Special note: Use the **Wiring Diagrams Technical Note for Twizy**.

Perform fault finding on the multiplex function (see Section 12.1 Multiplexing).
Check that the computers physically present on the vehicle are definitely the correct computers and are compatible with the vehicle. Check that there is a good supply to the computers (earth, + battery, + accessories or + after ignition).
Check the **connection** and **condition** of the **traction battery** connectors, component code **938**. If the connectors are faulty and if there is a repair procedure (see **Renault Technical Note 6015A, Repairing electrical wiring, Wiring: Precautions for repair**), repair the connectors, otherwise replace the wiring.
Check the **insulation, continuity** and the **absence of interference resistance** of the following connections: • **137G** between components **938** and **1063** • **137H** between components **938** and **1063** If the connection is faulty and if there is a repair procedure (see **Renault Technical Note 6015A, Repairing electrical wiring, Wiring: Precautions for repair**), repair the wiring, otherwise replace the wiring.
If the fault is still present, contact the Techline.

AFTER REPAIR	Follow the instructions. Deal with any other faults. Clear the **stored** faults.

TDB_V04_DF268

DF327 **DF328** **DF329** **PRESENT** **OR** **STORED**	LBC MULTIPLEX TRANSMISSION ABSENT

NOTES	**Note:** The fault is **present in all contexts**.
	Special note: Use the **Wiring Diagrams Technical Note for Twizy**.

Perform fault finding on the multiplex function (see Section 12.1 Multiplexing).
Make sure that the computers installed in the vehicle are the correct type and are compatible with the vehicle. Check that the computers are supplied correctly (earth, + battery, + accessories or + after ignition).
Check the **connection** and **condition** of the **traction battery** connectors, component code **938**. If the connectors are faulty and if there is a repair procedure (see **Renault Technical Note 6015A, Repairing electrical wiring, Wiring: Precautions for repair**), repair the connectors, otherwise replace the wiring.
Check the **insulation, continuity** and the **absence of interference resistance** of the following connections: • **137G** between components **938** and **1063** • **137H** between components **938** and **1063** If the connection is faulty and if there is a repair procedure (see **Renault Technical Note 6015A, Repairing electrical wiring, Wiring: Precautions for repair**), repair the wiring, otherwise replace the wiring.
If the fault is still present, contact the Techline.

AFTER REPAIR	Follow the instructions. Deal with any other faults. Clear the **stored** faults.

TDB_V04_DF327/TDB_V04_DF328/TDB_V04_DF329

DF372 **DF373** **PRESENT** **OR** **STORED**	TRACTION BATTERY TRAY TEMPERATURE

NOTES	**Special notes:** The fault is recorded as present after one occurrence of high temperature of the battery tray.
	Note: The maximum temperature of the battery pack is above 54°C Vehicle performance is reduced. After the vehicle has stopped, the fault immobilises the vehicle.
	Special note: Use the **Wiring Diagrams Technical Note for Twizy**.

To deal with this fault, it is necessary to lock out the vehicle and to use the appropriate safety equipment; see Technical Note 6037A.
Replace the **traction battery 938**
If the fault is still present, contact the Techline.

AFTER REPAIR	Follow the instructions. Deal with any other faults. Clear the **stored** faults.

DF404 PRESENT OR STORED	60 V BATTERY

NOTES	**Special notes:** The fault is recorded as present in charge mode and normal mode.
	Special note: Use the **Wiring Diagrams Technical Note for Twizy**.

If the temperature of the traction battery is below **-5°C**; place the vehicle in a sheltered location in order to increase the temperature of the battery.
If the temperature of the traction battery is not below **-5°C,** contact Techline before replacing the **traction battery.**
To deal with this fault, it is necessary to lock out the vehicle and to use the appropriate safety equipment; see Technical Note 6037A.
Replace the **traction battery 938**
If the fault is still present, contact the Techline.

AFTER REPAIR	Follow the instructions. Deal with any other faults. Clear the **stored** faults.

TDB_V04_DF404

4. Faults linked to the inverter

Tool fault	Diagnostic tool title
DF115	ELECTRIC MOTOR PHASE CIRCUIT
DF198	
DF536	SENSOR CIRCUIT ACCELERATOR PEDAL POSITION
DF396	
DF121	TEMPERATURE SENSOR CIRCUIT
DF214	
DF122	DEFECT MODE
DF123	BRAKE PEDAL TRAVEL SENSOR CIRCUIT
DF124	REVERSING LIGHTS CONTROL
DF126	PEB
DF136	+ START
DF163	PEDAL POTENTIOMETER CIRCUIT GANG 1
DF483	
DF484	
DF164	PEDAL POTENTIOMETER CIRCUIT GANG 2
DF486	
DF487	
DF194	60 V BATTERY
DF402	60 V BATTERY
DF178	

4. Faults linked to the inverter (continued 1)

Tool fault	Diagnostic tool title
DF263	BCB MULTIPLEX TRANSMISSION ABSENT
DF276	
DF298	LBC MULTIPLEX TRANSMISSION ABSENT
DF330	
DF331	
DF332	
DF428	
DF429	
DF430	
DF431	
DF432	
DF353	INVERTER POWER RELAY
DF354	
DF355	
DF403	
DF228	REVERSE GEAR LIGHTS CONTROL
DF366	INSTRUMENT PANEL MULTIPLEX SIGNAL ABSENT
DF415	PEB
DF416	PEB
DF417	PEB

4. Faults linked to the inverter (continued 2)

DF206	INVERTER SUPPLY RELAY
DF157	
DF456	PEB
DF030	IMMOBILISER CIRCUIT
DF465	ELECTRIC MOTOR
DF463	ELECTRIC MOTOR
DF470	ELECTRIC MOTOR
DF471	ELECTRIC MOTOR
DF472	ELECTRIC MOTOR
DF473	ELECTRIC MOTOR
DF459	PEB
DF458	PEB
DF447	ELECTRIC MOTOR TEMPERATURE
DF358	COMPUTER INTERNAL TEMPERATURE

DF115 PRESENT OR STORED	ELECTRIC MOTOR PHASE CIRCUIT

NOTES	**Special notes:** The fault is **present** in charge mode
	Note: The Charge Power limit is 0%
	Special note: **To perform the electrical checks below, it is necessary to use the test means described in Technical Note 6037A.**

To deal with this fault, it is necessary to lock out the vehicle and to use the appropriate safety equipment; see Technical Note 6037A.
Check the connection and condition of the **inverter** connector, component code **1063**. If the connector is faulty and if there is a repair procedure (see **Technical Note 6015A (Renault), Repairing electrical wiring, Wiring: Precautions for repair**), repair the connector, otherwise replace the wiring.

AFTER REPAIR	Follow the instructions. Deal with any other faults. Clear the **stored** faults.

TDB_V04_DF115

DF115 CONTINUED	

Disconnect the three phase electric motor from the inverter and check **the continuity and insulation to earth** of the following connections:

- **155A** for the **electric motor**, component code **262**
- **155B** for the **electric motor**, component code **262.**
- **155D** for the **electric motor**, component code **262.**
- **MHA vehicle earth**

If a connection is faulty, contact Techline before replacing the electric motor.
If all the connections are correct, check the continuity and insulation of the following connections:
(measured directly by the bolt thread which makes contact)

- **M1** for the **inverter**, component code **1063.**
- **M2** for the **inverter**, component code **1063.**
- **M3** for the **inverter**, component code **1063.**
- **MHA vehicle earth**

If a connection is faulty, contact Techline before replacing the inverter.
If the fault is still present, contact the Techline.

Contact the Techline.

AFTER REPAIR	Follow the instructions. Deal with any other faults. Clear the **stored** faults.

DF198 PRESENT OR STORED	ELECTRIC MOTOR PHASE CIRCUIT

NOTES	**Special notes:** The fault is **present** in charge mode
	Note: The Charge Power limit is 0%
	Special note: **To perform the electrical checks below, it is necessary to use the test means described in Technical Note 6037A.**

To deal with this fault, it is necessary to lock out the vehicle and to use the appropriate safety equipment; see Technical Note 6037A.
Check the connection and condition of the **inverter** connector, component code **1063**. If the connector is faulty and if there is a repair procedure (see **Technical Note 6015A (Renault), Repairing electrical wiring, Wiring: Precautions for repair**), repair the connector, otherwise replace the wiring.
Check the continuity and the insulation between the inverter and the electric motor for the following connections: • **155A** between components **1063** and **262**. • **155B** between components **1063** and **262**. • **155D** between components **1063** and **262**. If the connection is faulty and if there is a repair procedure (see **Renault Technical Note 6015A, Repairing electrical wiring, Wiring: Precautions for repair**), repair the wiring, otherwise replace the wiring.
Contact Techline before replacing the **inverter**, component code**1063**.

AFTER REPAIR	Follow the instructions. Deal with any other faults. Clear the **stored** faults.

TDB_V04_DF198

DF396 **DF536** **PRESENT** **OR** **STORED**	ACCELERATOR PEDAL POSITION SENSOR CIRCUIT

NOTES	**Special notes:** Use the **Wiring Diagrams Technical Note for Twizy**.

To deal with this fault, it is necessary to lock out the vehicle and to use the appropriate safety equipment; see Technical Note 6037A.
If the fault status is **Stored,** depress the accelerator and check the consistency of the action with **PR146 Accelerator pedal position** to find a fault or to change the fault to **Present**.
Check the connection and condition of the **accelerator position sensor** connector, component code **729**. If the connector is faulty and if there is a repair procedure (see **Technical Note 6015A (Renault), Repairing electrical wiring, Wiring: Precautions for repair**), repair the connector, otherwise replace the wiring.
Check the connection and condition of the **inverter** connector, component code **1063**. If the connector is faulty and if there is a repair procedure (see **Technical Note 6015A (Renault), Repairing electrical wiring, Wiring: Precautions for repair**), repair the connector, otherwise replace the wiring.

AFTER REPAIR	Follow the instructions. Deal with any other faults. Clear the **stored** faults.

TDB_V04_DF396/TDB_V04_DF536

DF396 DF536 CONTINUED 1	

Disconnect the connector for the **accelerator pedal**, component code **729**
Using a multimeter in the ohmmeter position, measure the resistance between the following connections:
- **Track 4 (3LS)** between components **729**
- **Track 6 (MB)** between components **729**

Expected values: between 1150 and 2875 Ohms (linear variation proportional to the action on the accelerator pedal)

Using a multimeter in the ohmmeter position, measure the resistance between the following **connections**:
- **Track 1 (3LW)** between components **729**
- **Track 5 (MAM)** between components **729**

Expected values: between 2300 and 5750 Ohms (linear variation proportional to the action on the accelerator pedal)

If the values are different from the expected value, replace the **accelerator pedal**, component code **729**

Switch the ignition to + after ignition feed.
Check the supply voltage of the **accelerator pedal**, component code **729** between the following connections:
- **Track 3 (3LR)** on component **729**.
- **Track 6 (MB)** on component **729**.

Expected value: 10 V
If the value is different from the expected value, check **the continuity** and **insulation** of the following connections:
- **3LR** between components **729** and **1063**.
- **MB** between components **729** and **1063**.

After checking the **connections 3LR and MB**:
If the connection is faulty and if there is a repair procedure (see **Renault Technical Note 6015A, Repairing electrical wiring, Wiring: Precautions for repair**), repair the wiring, otherwise replace the wiring.
If the connection is correct, replace the **inverter**, component code **1063**.

AFTER REPAIR	Follow the instructions. Deal with any other faults. Clear the **stored** faults.

DF396 DF536 CONTINUED 2	

Switch the ignition to + after ignition feed.
Check the supply voltage of the **accelerator pedal**, component code **729** between the following connections:
- **3LU** on component **729**.
- **MAM** on component **729**.

Expected value: 10 V

If the value is different from the expected value, check **the continuity** and **insulation** of the following connections:
- **3LU** between components **729** and **1063**.
- **MAM** between components **729** and **1063**.

After checking the **connections 3LU and MAM**:
If the connection is faulty and if there is a repair procedure (see **Renault Technical Note 6015A, Repairing electrical wiring, Wiring: Precautions for repair**), repair the wiring, otherwise replace the wiring.
If the connection is correct, replace the **inverter**, component code **1063**.

AFTER REPAIR	Follow the instructions. Deal with any other faults. Clear the **stored** faults.

DF396 DF536 CONTINUED 3	

Place the vehicle under the following conditions:
Connector for the **accelerator pedal**, component code **729** connected
Connector for the **inverter**, component code **1063** connected
Ignition on
No action on the accelerator pedal

Using a multimeter in the voltmeter position, measure the supply voltage of the **accelerator pedal**, component code **729** between the following connections:
- **Track 4 (3LS)** on component **729**.
- **Track 6 (MB)** on component **729**.

Expected value: 1.5 V

If the value is different from the expected value, check **the continuity** and **insulation** of the following connection:
- **3LS** between components **729** and **1063**.

After checking the connection **3LS**:
If the connection is faulty and if there is a repair procedure (see **Renault Technical Note 6015A, Repairing electrical wiring, Wiring: Precautions for repair**), repair the wiring, otherwise replace the wiring.
If the connection is correct, replace the **inverter**, component code **1063**.

AFTER REPAIR	Follow the instructions. Deal with any other faults. Clear the **stored** faults.

DF396 **DF536** **CONTINUED 4**	

Place the vehicle under the following conditions:
Connector for the **accelerator pedal**, component code **729** connected
Connector for the **inverter**, component code **1063** connected
Ignition on
No action on the accelerator pedal

Using a multimeter in the voltmeter position, measure the supply voltage of the **accelerator pedal**, component code **729** between the following connections:
Track 1 (3LW) on component **729.**
Track 5 (MAM) on component **729.**
Expected value: 0.75 V

If the value is different from the expected value, check **the continuity** and **insulation** of the following connection: **3LW** between components **729** and **1063**.

After checking the connection **3LW**:
If the connection is faulty and if there is a repair procedure (see **Renault Technical Note 6015A, Repairing electrical wiring, Wiring: Precautions for repair**), repair the wiring, otherwise replace the wiring.
If the connection is correct, replace the **inverter**, component code **1063**.

Replace the **inverter**, component code **1063**.

If the fault is still present, contact the Techline.

AFTER REPAIR	Follow the instructions. Deal with any other faults. Clear the **stored** faults.

DF454 **DF453** **DF126** **DF555** **DF556** **DF559** **PRESENT** **OR** **STORED**	INVERTER INTERNAL FAULT

NOTES	**Special notes:** The fault is **present in all contexts**.
	Note: The fault is a fault inside the inverter. The inverter power relay line is open; impossible to supply power to the electric motor.
	Special notes: Use the **Wiring Diagrams Technical Note for Twizy**.

Replace the **inverter**, component code **1063**.
If the fault is still present, contact the Techline.

AFTER REPAIR	Follow the instructions. Deal with any other faults. Clear the **stored** faults.

DF121 **DF214** **PRESENT** **OR** **STORED**	TEMPERATURE SENSOR CIRCUIT

NOTES	**Note:** Immobilising fault.
	Special notes: Use the **Wiring Diagrams Technical Note for Twizy**.

Check that parameter **PR152 ELECTRIC MOTOR TEMPERATURE** varies by performing a road test. To do this, if possible, perform the road test with a passenger. Otherwise, record the temperature before the road test and compare it after returning from the test.
Check the connection and condition of the **inverter** connector, component code **1063**. If the connector is faulty and if there is a repair procedure (see **Technical Note 6015A (Renault), Repairing electrical wiring, Wiring: Precautions for repair**), repair the connector, otherwise replace the wiring.
Check the connection and condition of the connector for the **traction motor**, component code **262**. If the connector is faulty and if there is a repair procedure (see **Technical Note 6015A (Renault), Repairing electrical wiring, Wiring: Precautions for repair**), repair the connector, otherwise replace the wiring.
Check the + 5 V supply of the temperature sensor (fitted to the **traction motor** (**262**)) between the following connections: • **55R** and **MHA** of component **262**.

AFTER REPAIR	Follow the instructions. Deal with any other faults. Clear the **stored** faults.

TDB_V04_DF121/TDB_V04_DF214

DF121 **DF214** **CONTINUED**	

Check the **continuity** and the **insulation** of the following connections:
- **55R** between components **262** and **1063**.
- **MH** between components **262** and **1063**.
- **MHA** between components **262** and **1063**.

If the connection is faulty and if there is a repair procedure (see **Renault Technical Note 6015A, Repairing electrical wiring, Wiring: Precautions for repair**), repair the wiring, otherwise replace the wiring.

If the fault is still present, use the second temperature sensor fitted to the electric motor.
If the second temperature sensor has already been used, contact Techline before replacing the **traction motor**, component code **262**.

Contact Techline before replacing the **traction motor**, component code **262**.

AFTER REPAIR	Follow the instructions. Deal with any other faults. Clear the **stored** faults.

DF122 PRESENT OR STORED	DEFECT MODE

NOTES	**Special notes:** The fault is **present** at vehicle activation and in traction mode
	Note: The fault corresponds to a fault on the two gangs of the accelerator pedal
	Special notes: Use the **Wiring Diagrams Technical Note for Twizy**.

To deal with this fault, it is necessary to lock out the vehicle and to use the appropriate safety equipment; see Technical Note 6037A.
If the fault status is **Stored,** depress the accelerator and check the consistency of the action with **PR146 ACCELERATOR PEDAL POSITION** to find a fault or to change the fault to **Present**.
Check the connection and condition of the **accelerator position sensor** connector, component code **729**. If the connector is faulty and if there is a repair procedure (see **Technical Note 6015A (Renault), Repairing electrical wiring, Wiring: Precautions for repair**), repair the connector, otherwise replace the wiring.
Check the connection and condition of the **inverter** connector, component code **1063**. If the connector is faulty and if there is a repair procedure (see **Technical Note 6015A (Renault), Repairing electrical wiring, Wiring: Precautions for repair**), repair the connector, otherwise replace the wiring.

AFTER REPAIR	Follow the instructions. Deal with any other faults. Clear the **stored** faults.

TDB_V04_DF122

DF122 CONTINUED 1	

Disconnect the connector for the **accelerator pedal**, component code **729**
Using a multimeter in the ohmmeter position, measure the resistance between the following **connections**:
- **Track 4 (3LS)** between components **729**
- **Track 6 (MB)** between components **729**

Expected values: between 1150 and 2875 Ohms (linear variation proportional to the action on the accelerator pedal)

Using a multimeter in the ohmmeter position, measure the resistance between the following **connections**:
- **Track 1 (3LW)** between components **729**
- **Track 5 (MAM)** between components **729**

Expected values: between 2300 and 5750 Ohms (linear variation proportional to the action on the accelerator pedal)

If the values are different from the expected value, replace the **accelerator pedal**, component code **729**

Switch the ignition to + after ignition feed.
Check the supply voltage of the **accelerator pedal**, component code **729** between the following connections:
- **Track 3 (3LR)** on component **729**.
- **Track 6 (MB)** on component **729**.

Expected value: 10 V
If the value is different from the expected value, check **the continuity** and **insulation** of the following connections:
- **3LR** between components **729** and **1063**.
- **MB** between components **729** and **1063**.

After checking the **connections 3LR and MB**:
If the connection is faulty and if there is a repair procedure (see **Renault Technical Note 6015A, Repairing electrical wiring, Wiring: Precautions for repair**), repair the wiring, otherwise replace the wiring.
If the connection is correct, replace the **inverter**, component code **1063**.

AFTER REPAIR	Follow the instructions. Deal with any other faults. Clear the **stored** faults.

DF122 CONTINUED 2	

Switch the ignition to + after ignition feed.
Check the supply voltage of the **accelerator pedal**, component code **729** between the following connections:
- **3LU** on component **729**.
- **MAM** on component **729**.

Expected value: 10 V

If the value is different from the expected value, check **the continuity** and **insulation** of the following connections:
- **3LU** between components **729** and **1063**.
- **MAM** between components **729** and **1063**.

After checking the **connections 3LU and MAM**:
If the connection is faulty and if there is a repair procedure (see **Renault Technical Note 6015A, Repairing electrical wiring, Wiring: Precautions for repair**), repair the wiring, otherwise replace the wiring.
If the connection is correct, replace the **inverter**, component code **1063**.

AFTER REPAIR	Follow the instructions. Deal with any other faults. Clear the **stored** faults.

DF122 CONTINUED 3	

Place the vehicle under the following conditions:
Connector for the **accelerator pedal**, component code **729** connected
Connector for the **inverter**, component code **1063** connected
Ignition on
No action on the accelerator pedal

Using a multimeter in the voltmeter position, measure the supply voltage of the **accelerator pedal**, component code **729** between the following connections:
Track 4 (3LS) on component **729**.
Track 6 (MB) on component **729**.
Expected value: 1.5 V

If the value is different from the expected value, check **the continuity** and **insulation** of the following connection: **3LS** between components **729** and **1063**.

After checking the connection **3LS**:
If the connection is faulty and if there is a repair procedure (see **Renault Technical Note 6015A, Repairing electrical wiring, Wiring: Precautions for repair**), repair the wiring, otherwise replace the wiring.
If the connection is correct, replace the **inverter**, component code **1063**.

AFTER REPAIR	Follow the instructions. Deal with any other faults. Clear the **stored** faults.

DF122 CONTINUED 4	

Place the vehicle under the following conditions:
Connector for the **accelerator pedal**, component code **729** connected
Connector for the **inverter**, component code **1063** connected
Ignition on
No action on the accelerator pedal

Using a multimeter in the voltmeter position, measure the supply voltage of the **accelerator pedal**, component code **729** between the following connections:
Track 1 (3LW) on component **729.**
Track 5 (MAM) on component **729.**
Expected value: 0.75 V

If the value is different from the expected value, check **the continuity** and **insulation** of the following connection: **3LW** between components **729** and **1063**.

After checking the connection **3LW**:
If the connection is faulty and if there is a repair procedure (see **Renault Technical Note 6015A, Repairing electrical wiring, Wiring: Precautions for repair**), repair the wiring, otherwise replace the wiring.
If the connection is correct, replace the **inverter**, component code **1063**.

Replace the **inverter**, component code **1063**.

If the fault is still present, contact the Techline.

AFTER REPAIR	Follow the instructions. Deal with any other faults. Clear the **stored** faults.

DF542 PRESENT OR STORED	BRAKE PEDAL SENSOR

NOTES	**Special notes:** The fault is **present in Activation mode, Charge mode and Traction mode**.
	Special notes: Use the **Wiring Diagrams Technical Note for Twizy**.

If the fault status is **stored,** switch on the + after ignition feed, depress and release the brake pedal and check the status of the **brake light switch**, component code **160 ET313 Brake pedal** to note a fault or to change the status of the fault to **present**. Repeat this operation several times.
Check the condition of fuse **F06 (15 A) of the passenger compartment fuse and relay box**, component code **1016**. Replace the fuse if it is defective. If the fuse blows again, check the **insulation** of the following connection: **AP2** between components **1016** and **160**.
Check the connection and condition of the **brake light switch** connector, component code **160**. If the connector is faulty and if there is a repair procedure (see **Technical Note 6015A (Renault), Repairing electrical wiring, Wiring: Precautions for repair**), repair the connector, otherwise replace the wiring.
Check the connection and condition of the **passenger compartment fuse and relay box** connector, component code **1016**. If the connector is faulty and if there is a repair procedure (see **Technical Note 6015A (Renault), Repairing electrical wiring, Wiring: Precautions for repair**), repair the connector, otherwise replace the wiring.

AFTER REPAIR	Follow the instructions. Deal with any other faults. Clear the **stored** faults.

TDB_V04_DF542

DF542 CONTINUED 1	

Check the connection and condition of the **boot lid left-hand light** connector, component code **1285**. If the connector is faulty and if there is a repair procedure (see **Technical Note 6015A (Renault), Repairing electrical wiring, Wiring: Precautions for repair**), repair the connector, otherwise replace the wiring.
Check the connection and condition of the **inverter** connector, component code **1063**. If the connector is faulty and if there is a repair procedure (see **Technical Note 6015A (Renault), Repairing electrical wiring, Wiring: Precautions for repair**), repair the connector, otherwise replace the wiring.
With the ignition off and the connector for the **brake switch**, component code **160**, disconnected. Use a multimeter in the ohmmeter position to check the **brake light switch**, component code **160** Expected values: • Brake pedal released Between Track 1 and Track 2: infinite Between Track 3 and Track 4: 0 Ohms • Brake pedal depressed Between Track 1 and Track 2: 0 Ohms Between Track 3 and Track 4: infinite If the check is not correct, replace the **brake light switch**, component code **160**.

AFTER REPAIR	Follow the instructions. Deal with any other faults. Clear the **stored** faults.

DF542 CONTINUED 2	

Ignition on

Use a multimeter in the voltmeter position to measure the voltage between:
- **AP2** on **brake light switch**, component code **160**
- **MAM** on **brake light switch**, component code **160**

Expected value: 12V

If the value does not correspond to the expected value, use a multimeter in the voltmeter position to measure the voltage between:
- **AP2** on **brake light switch**, component code **160**
- **A chassis earth**

Expected value: 12V

If the value still does not correspond to the expected value, check the **continuity** of the following connection:
- **AP2** between components **160** and **1285**

If the connection is faulty and if there is a repair procedure (see **Renault Technical Note 6015A, Repairing electrical wiring, Wiring: Precautions for repair**), repair the wiring, otherwise replace the wiring.
If the value corresponds to the expected value, check the **continuity** of the following connection:
- **MAM**

If the connection is faulty and if there is a repair procedure (see **Renault Technical Note 6015A, Repairing electrical wiring, Wiring: Precautions for repair**), repair the wiring, otherwise replace the wiring.

AFTER REPAIR	Follow the instructions. Deal with any other faults. Clear the **stored** faults.

DF542 CONTINUED 3	

Switch on the + after ignition feed, depress the brake pedal and check the voltage of the **brake light switch**, component code **1285** between:
- **65A**
- **chassis earth**

If the value does not correspond to the expected value, check the **continuity** and **insulation** of the following connection:
65A between components **160** and **1285**
If the connection is faulty and if there is a repair procedure (see **Renault Technical Note 6015A, Repairing electrical wiring, Wiring: Precautions for repair**), repair the wiring, otherwise replace the wiring.

With the ignition off and the brake pedal released.
Use a multimeter in the ohmmeter position to measure the continuity between:
- **5A** of the **inverter**, component code **1063**
- **chassis earth**

If the connection is faulty and if there is a repair procedure (see **Renault Technical Note 6015A, Repairing electrical wiring, Wiring: Precautions for repair**), repair the wiring, otherwise replace the wiring.

With the ignition off and the brake pedal released.
Use a multimeter to check the insulation of the following connection:
- **5A** of the **inverter**, component code **1063**

If the connection is faulty and if there is a repair procedure (see **Renault Technical Note 6015A, Repairing electrical wiring, Wiring: Precautions for repair**), repair the wiring, otherwise replace the wiring.

Contact the Techline. before replacing the **inverter**, component code **1063.**

AFTER REPAIR	Follow the instructions. Deal with any other faults. Clear the **stored** faults.

DF126 PRESENT OR STORED	PEB

NOTES	**Special notes:** The fault is **present in Activation mode, Charge mode and Traction mode**.
	Note: Inverter internal fault Immobilising fault.
	Special notes: Use the **Wiring Diagrams Technical Note for Twizy**.

To deal with this fault, it is necessary to lock out the vehicle and to use the appropriate safety equipment; see Technical Note 6037A.
If the fault is still present, contact Techline before replacing the **inverter** (component code **1063**).

AFTER REPAIR	Follow the instructions. Deal with any other faults. Clear the **stored** faults.

TDB_V04_DF126

DF124 PRESENT OR STORED	REVERSING LIGHTS CONTROL

NOTES	
	Special notes: The fault is **present** in Activation mode.
	Special notes: Use the **Wiring Diagrams Technical Note for Twizy**.

Check the condition of the reversing lights bulb. If the bulb is faulty, replace the bulb.
Check the condition of fuse **F10 (10 A) of the passenger compartment fuse and relay box**, component code **1016**. Replace the fuse if it is defective. If the fuse blows again, check the **insulation** of the following connection: • **AP1** between components **1016** and **602**.
Check the condition of fuse **F03 (15 A) of the passenger compartment fuse and relay box**, component code **1016**. Replace the fuse if it is defective. If the fuse blows again, check the **insulation** of the following connection: • **BP56** between components **1016** and **602**.
Check the connection and condition of the **reversing light relay**, component code **602** located on the **passenger compartment fuse and relay box**, component code **1016**. If a physical fault is noted, replace the relay.
Check the connection and condition of the **inverter** connector, component code **1063**. If the connector is faulty and if there is a repair procedure (see **Technical Note 6015A (Renault), Repairing electrical wiring, Wiring: Precautions for repair**), repair the connector, otherwise replace the wiring.

AFTER REPAIR	
	Follow the instructions. Deal with any other faults. Clear the **stored** faults.

DF124 CONTINUED 1	

Check the connection and condition of the **passenger compartment fuse and relay box** connector, component code **1016**. If the connector is faulty and if there is a repair procedure (see **Technical Note 6015A (Renault), Repairing electrical wiring, Wiring: Precautions for repair**), repair the connector, otherwise replace the wiring.
Check the relay, component code **602** on the **passenger compartment fuse and relay box**, component code **1016**.
Check the operation of the reversing light relay, component code **602** on the **passenger compartment fuse and relay box**, component code **1016**. If the relay is defective, replace the relay.
Switch on the + after ignition feed, select reverse gear and check that the voltage is**12 V** between the following terminals on the **reversing light relay**, component code **1285:** • **H66P** • **A chassis earth** If the value corresponds to the expected value, check the **continuity** and **insulation** of the connection **MG** If the connection is faulty and if there is a repair procedure (see **Renault Technical Note 6015A, Repairing electrical wiring, Wiring: Precautions for repair**), repair the wiring, otherwise replace the wiring. Otherwise, replace the **reversing light**, component code **1285.**

AFTER REPAIR	Follow the instructions. Deal with any other faults. Clear the **stored** faults.

DF124 CONTINUED 2	

Switch on the + after ignition feed, check that the voltage is **12 V** between the following terminals on the **reversing light relay**, component code **602:**

- **BP56**
- **A chassis earth**

If the value does not correspond to the expected value, check the **continuity** of the following connection:
BP56 between components **602** and **1016**
If the connection is faulty and if there is a repair procedure (see **Renault Technical Note 6015A, Repairing electrical wiring, Wiring: Precautions for repair**), repair the wiring, otherwise replace the wiring.

Switch on the + after ignition feed, select reverse gear and check that the voltage is **12 V** between the following terminals on the **reversing light relay**, component code **602:**

- **66G**
- **BP56**

If the value does not correspond to the expected value, check the **continuity** and **insulation** of the following connection:
66G between components **602** and **1063**
If the connection is faulty and if there is a repair procedure (see **Renault Technical Note 6015A, Repairing electrical wiring, Wiring: Precautions for repair**), repair the wiring, otherwise replace the wiring.

AFTER REPAIR	Follow the instructions. Deal with any other faults. Clear the **stored** faults.

DF124 CONTINUED 3	

Switch on the + after ignition feed, check that the voltage is **12 V** between the following terminals on the **reversing light relay**, component code **602:**
- **AP1**
- **A chassis earth**

If the value does not correspond to the expected value, check the **continuity** of the following connection:
AP1 between components **602** and **1016**
If the connection is faulty and if there is a repair procedure (see **Renault Technical Note 6015A, Repairing electrical wiring, Wiring: Precautions for repair**), repair the wiring, otherwise replace the wiring.

Check the **continuity** and **insulation** of the following connection:
- **H66P** between components **1016** and **1285**.

If the connection is faulty and if there is a repair procedure (see **Renault Technical Note 6015A, Repairing electrical wiring, Wiring: Precautions for repair**), repair the wiring, otherwise replace the wiring.

Contact Techline before replacing the **inverter**, component code **1063;**

AFTER REPAIR	Follow the instructions. Deal with any other faults. Clear the **stored** faults.

DF228 PRESENT OR STORED	REVERSING LIGHTS CONTROL

NOTES	**Special notes:** The fault is **present** in Activation mode.
	Special notes: Use the **Wiring Diagrams Technical Note for Twizy**.

To deal with this fault, it is necessary to lock out the vehicle and to use the appropriate safety equipment; see Technical Note 6037A.
Check the vehicle fuses. If a fuse is faulty, replace the fuse
Switch on the + after ignition feed and select reverse gear Use a multimeter in the voltmeter position to check the voltage between the following connections on the **reversing light**, component code **1285:** • **65A** • **Chassis earth** Expected value: 12V If the value measured does not correspond to the expected value and if the connector is faulty and if there is a repair procedure (see **Technical Note 6015A (Renault), Repairing electrical wiring, Wiring: Precautions for repair**), repair the connector, otherwise replace the wiring. If the value measured does not correspond to the expected value, and the fault is still present, replace the **inverter**, component code **1063**

AFTER REPAIR	Follow the instructions. Deal with any other faults. Clear the **stored** faults.

TDB_V04_DF228

DF228 CONTINUED	

Check the connection and condition of the **inverter** connector, component code **1063**. If the connector is faulty and if there is a repair procedure (see **Technical Note 6015A (Renault), Repairing electrical wiring, Wiring: Precautions for repair**), repair the connector, otherwise replace the wiring.
Check the **continuity** and **insulation to +60 V** of the following connection: **66G** between **1063** and **602** If the connection is faulty and if there is a repair procedure (see **Renault Technical Note 6015A, Repairing electrical wiring, Wiring: Precautions for repair**), repair the wiring, otherwise replace the wiring. If the **inverter**, component code **1063** is faulty, replace the **inverter**, component code **1063**. If the **reversing light relay**, component code **602** is faulty, replace the **reversing light relay**, component code **602**.
Check the operation of the reversing light relay, component code **602** on the **passenger compartment fuse and relay box**, component code **1016**. If the relay is defective, replace the relay.
If the fault is still present, contact the Techline.

AFTER REPAIR	Follow the instructions. Deal with any other faults. Clear the **stored** faults.

DF136 PRESENT OR STORED	+ START

NOTES	**Special notes:** The fault is **present** in Activation mode.
	Note: Immobilising fault.
	Special notes: Use the **Wiring Diagrams Technical Note for Twizy**.

If the fault status is **stored,** turn the ignition key to position + START for several seconds, then release the key and check status **ET316 + Start** to note a fault or to change the fault status to **present**. Repeat this operation several times.
Check the condition of fuse **F21 (5 A) of the passenger compartment fuse and relay box**, component code **1016**. Replace the fuse if it is defective. If the fuse blows again, check the **insulation** of the following connection: • **D** between components **1016** and **1063**. If the connection is faulty and if there is a repair procedure (see **Renault Technical Note 6015A, Repairing electrical wiring, Wiring: Precautions for repair**), repair the wiring, otherwise replace the wiring.
Check the connection and condition of the **inverter** connector, component code **1063**. If the connector is faulty and if there is a repair procedure (see **Technical Note 6015A (Renault), Repairing electrical wiring, Wiring: Precautions for repair**), repair the connector, otherwise replace the wiring.

AFTER REPAIR	Follow the instructions. Deal with any other faults. Clear the **stored** faults.

DF136 CONTINUED 1	

Check the connection and condition of the **passenger compartment fuse and relay box** connector, component code **1016**. If the connector is faulty and if there is a repair procedure (see **Technical Note 6015A (Renault), Repairing electrical wiring, Wiring: Precautions for repair**), repair the connector, otherwise replace the wiring.
Check the connection and condition of the **immobiliser switch** connector, component code **104**. If the connector is faulty and if there is a repair procedure (see **Technical Note 6015A (Renault), Repairing electrical wiring, Wiring: Precautions for repair**), repair the connector, otherwise replace the wiring.
Switch on the + after ignition feed. Check the operation of the radio and the wipers. If the components do not operate, check the following components in the following order: • fuse **F1 (50A)** of **1793** • fuse **F1 (50A)** of **1792** • **Immobiliser switch,** component code **1016** • Connection **BP13** between **104** and **1793**
Check the earth strap between the **inverter**, component code **1063** and the vehicle chassis**.** If the connection is faulty and if there is a repair procedure (see **Renault Technical Note 6015A, Repairing electrical wiring, Wiring: Precautions for repair**), repair the wiring, otherwise replace the wiring.

AFTER REPAIR	Follow the instructions. Deal with any other faults. Clear the **stored** faults.

DF136 CONTINUED 2	

Turn the key to position + START and hold it there to check the voltage on connection **D** of the **passenger compartment fuse and relay box**, component code **1016.**
Expected value: 12V

Release the key and check the voltage on connection **D** of the **passenger compartment fuse and relay box**, component code **1016.**
Expected value: 0 V

If the value does not correspond to the expected value, check the **continuity** and **insulation** of the following connection:
- **D** between components **104** and **1016**.

If the connection is faulty and if there is a repair procedure (see **Renault Technical Note 6015A, Repairing electrical wiring, Wiring: Precautions for repair**), repair the wiring, otherwise replace the wiring.

Turn the key to position + START and hold it there to check the voltage on connection **D** of the **inverter**, component code **1063**.
Expected value: 12V

Release the key and check the voltage on connection **D** of the **inverter**, component code **1063.**
Expected value: 0 V

If the value does not correspond to the expected value, check the **continuity** and **insulation** of the following connection:
- **D** between components **1063** and **1016**.

If the connection is faulty and if there is a repair procedure (see **Renault Technical Note 6015A, Repairing electrical wiring, Wiring: Precautions for repair**), repair the wiring, otherwise replace the wiring.

AFTER REPAIR	Follow the instructions. Deal with any other faults. Clear the **stored** faults.

DF136 CONTINUED 3	

Test conditions:
- With the ignition off
- With the connectors of the **passenger compartment fuse and relay box**, component code **1016** disconnected
- Fuse **F21 (5 A)** of the **passenger compartment fuse and relay box**, component code **1016**, is correct

Use a multimeter in the ohmmeter position to check the **continuity** between connections **D** of the **passenger compartment fuse and relay box**, component code **1016.**

If the check is not correct, replace the **passenger compartment fuse and relay box**, component code **1016.**

Contact Techline, before replacing the **inverter**, component code **1063**

AFTER REPAIR	Follow the instructions. Deal with any other faults. Clear the **stored** faults.

DF220 PRESENT OR STORED	+ START

NOTES	**Special notes:** The fault **is detected when driving**.
	Note: Immobilising fault.
	Special notes: Use the **Wiring Diagrams Technical Note for Twizy**.

If the customer held the key in position + START for more than 30 seconds, this fault should not be dealt with.
Check the condition of fuse **F21 (5 A) of the passenger compartment fuse and relay box**, component code **1016**. Replace the fuse if it is defective. If the fuse blows again, check the **insulation** of the following connection: **D** between components **1016** and **1063**. If the connection is faulty and if there is a repair procedure (see **Renault Technical Note 6015A, Repairing electrical wiring, Wiring: Precautions for repair**), repair the wiring, otherwise replace the wiring.
Check the condition of fuse **F1 (50 A)** of the **fuse holder module 2**, component code **1793**. Replace the fuse if it is defective. If the fuse blows again, check the **insulation** of the following connection: **BP13** between components **1793** and **104**. If the connection is faulty and if there is a repair procedure (see **Renault Technical Note 6015A, Repairing electrical wiring, Wiring: Precautions for repair**), repair the wiring, otherwise replace the wiring.

AFTER REPAIR	Follow the instructions. Deal with any other faults. Clear the **stored** faults.

TDB_V04_DF220

DF220 CONTINUED 1	

Check the condition of fuse **F1 (50 A)** of the **fuse holder module 1**, component code **1793**. Replace the fuse if it is defective. If the fuse blows again, check the **insulation** of the following connection: **BP12** between components **1793** and **1792**. If the connection is faulty and if there is a repair procedure (see **Renault Technical Note 6015A, Repairing electrical wiring, Wiring: Precautions for repair**), repair the wiring, otherwise replace the wiring.
Check the connection and condition of the **inverter** connector, component code **1063**. If the connector is faulty and if there is a repair procedure (see **Technical Note 6015A (Renault), Repairing electrical wiring, Wiring: Precautions for repair**), repair the connector, otherwise replace the wiring.
Check the connection and condition of the **passenger compartment fuse and relay box** connector, component code **1016**. If the connector is faulty and if there is a repair procedure (see **Technical Note 6015A (Renault), Repairing electrical wiring, Wiring: Precautions for repair**), repair the connector, otherwise replace the wiring.
Check the connection and condition of the **immobiliser switch** connector, component code **104**. If the connector is faulty and if there is a repair procedure (see **Technical Note 6015A (Renault), Repairing electrical wiring, Wiring: Precautions for repair**), repair the connector, otherwise replace the wiring.

AFTER REPAIR	Follow the instructions. Deal with any other faults. Clear the **stored** faults.

DF220 CONTINUED 2	

Turn the key to position + START and hold it there to check the voltage between connection **D** of the **inverter**, component code **1063** and a **chassis earth**.
Expected value: 12V

Release the key and check the voltage between connection **D** of the **Inverter**, component code **1063** and a **chassis earth.**
Expected value: 0 V

If the value corresponds to the expected value, check the earth strap between the **inverter**, component code **1063** and the vehicle chassis.

If the connection is faulty and if there is a repair procedure (see **Renault Technical Note 6015A, Repairing electrical wiring, Wiring: Precautions for repair**), repair the wiring, otherwise replace the wiring.

Check to perform on connection **D** downstream of the **passenger compartment fuse and relay box**, component code **1016.**
Turn the key to position + START and hold it there to check the voltage between connection **D** of the **passenger compartment fuse and relay box**, component code **1016** and a **chassis earth**.
Expected value: 12V

Release the key and check the voltage between connection **D** of the **passenger compartment fuse and relay box**, component code **1016** and a **chassis earth.**
Expected value: 0 V

If the value corresponds to the expected value, repair the following connection:
- **D** between components **1063** and **1016**.

If the connection is faulty and if there is a repair procedure (see **Renault Technical Note 6015A, Repairing electrical wiring, Wiring: Precautions for repair**), repair the wiring, otherwise replace the wiring.

AFTER REPAIR	Follow the instructions. Deal with any other faults. Clear the **stored** faults.

DF220 CONTINUED 3	

Check to perform on connection **D** upstream of the **passenger compartment fuse and relay box**, component code **1016.**
Turn the key to position + START and hold it there to check the voltage between connection **D** of the **passenger compartment fuse and relay box**, component code **1016** and a **chassis earth**.
Expected value: 12V

Release the key and check the voltage between connection **D** of the **passenger compartment fuse and relay box**, component code **1016** and a **chassis earth.**
Expected value: 0 V

If the value corresponds to the expected value, replace the **passenger compartment fuse and relay box**, component code **1016.**

Turn the key to position + START and hold it there to check the voltage between connection **D** of the **immobiliser switch**, component code **104** and a **chassis earth**.
Expected value: 12V

Release the key and check the voltage between connection **D** of the immobiliser switch, component code **104** and a **chassis earth.**
Expected value: 0 V

If the value corresponds to the expected value, repair the following connection:
- **D** between components **1016** and **104**.

If the connection is faulty and if there is a repair procedure (see **Renault Technical Note 6015A, Repairing electrical wiring, Wiring: Precautions for repair**), repair the wiring, otherwise replace the wiring.

AFTER REPAIR	Follow the instructions. Deal with any other faults. Clear the **stored** faults.

DF220 CONTINUED 4	

Use a multimeter in the voltmeter position to measure the voltage between the following connections:
- **BP13** between component **104**

Chassis earth
Expected value: 12V

If the value corresponds to the expected value, replace the **immobiliser switch**, component code **104**

Use a multimeter in the voltmeter position to measure the voltage between the following connections:
- **BP13** between component **1793**

Chassis earth
Expected value: 12V

If the value corresponds to the expected value, repair the following connection:
BP13 between components **1793** and **104**.

If the connection is faulty and if there is a repair procedure (see **Renault Technical Note 6015A, Repairing electrical wiring, Wiring: Precautions for repair**), repair the wiring, otherwise replace the wiring.

Use a multimeter in the voltmeter position to measure the voltage between the following connections:
- **BP12** between component **1793**

Chassis earth
Expected value: 12V

If the value corresponds to the expected value, replace **fuse holder module 2**, component code **1793**

AFTER REPAIR	Follow the instructions. Deal with any other faults. Clear the **stored** faults.

DF220 CONTINUED 5	

Use a multimeter in the voltmeter position to measure the voltage between the following connections:
- **BP12** between components **1792**

Chassis earth
Expected value: 12V

If the value corresponds to the expected value, repair the following connection:
- **BP12** between components **1793** and **1792**.

If the connection is faulty and if there is a repair procedure (see **Renault Technical Note 6015A, Repairing electrical wiring, Wiring: Precautions for repair**), repair the wiring, otherwise replace the wiring.

Use a multimeter in the voltmeter position to measure the voltage between the following connections:
- **B** between components **1792**

Chassis earth
Expected value: 12V

If the value corresponds to the expected value, replace the **fuse holder module 1**, component code **1792**

Contact Techline, before replacing the **inverter**, component code **1063**

AFTER REPAIR	Follow the instructions. Deal with any other faults. Clear the **stored** faults.

DF163 **DF483** **DF484** **PRESENT** **OR** **STORED**	PEDAL POTENTIOMETER CIRCUIT GANG 1

NOTES	**Special notes:** Use the **Wiring Diagrams Technical Note for Twizy**.

To deal with this fault, it is necessary to lock out the vehicle and to use the appropriate safety equipment; see Technical Note 6037A.
If the fault status is **stored,** depress the accelerator and check the consistency of the action with **PR146 Accelerator pedal position** to find a fault or to change the fault to **present**.
Check the connection and condition of the **accelerator position sensor** connector, component code **729**. If the connector is faulty and if there is a repair procedure (see **Technical Note 6015A (Renault), Repairing electrical wiring, Wiring: Precautions for repair**), repair the connector, otherwise replace the wiring.
Check the connection and condition of the **inverter** connector, component code **1063**. If the connector is faulty and if there is a repair procedure (see **Technical Note 6015A (Renault), Repairing electrical wiring, Wiring: Precautions for repair**), repair the connector, otherwise replace the wiring.

AFTER REPAIR	Follow the instructions. Deal with any other faults. Clear the **stored** faults.

TDB_V04_DF163/TDB_V04_DF483/TDB_V04_DF484

DF163 DF483 DF484 CONTINUED 1	

Disconnect the connector for the **accelerator pedal**, component code **729**
Using a multimeter in the ohmmeter position, measure the resistance between the following **connections**:
- **3LS** between components **729**
- **MB** between components **729**

Expected values: between 1150 and 2875 Ohms (linear variation proportional to the action on the accelerator pedal)

If the value is different from the expected value, replace the **accelerator pedal**, component code **729**

Switch the ignition to + after ignition feed.
Check the supply voltage of the **accelerator pedal**, component code **729** between the following connections:
- **3LR** on component **729**.
- **MB** on component **729**.

Expected value: 10 V

If the value is different from the expected value, check **the continuity** and **insulation** of the following connections:
- **3LR** between components **729** and **1063**.
- **MB** between components **729** and **1063**.

After checking the connections **3LR** and **MB**:
If the connection is faulty and if there is a repair procedure (see **Renault Technical Note 6015A, Repairing electrical wiring, Wiring: Precautions for repair**), repair the wiring, otherwise replace the wiring.
If the connection is correct, replace the **inverter**, component code **1063**.

AFTER REPAIR	Follow the instructions. Deal with any other faults. Clear the **stored** faults.

DF163 DF483 DF484 CONTINUED 2	

Place the vehicle under the following conditions:
- Connector for the **accelerator pedal**, component code **729** connected
- Connector for the **inverter**, component code **1063** connected
- Ignition on
- No action on the accelerator pedal

Using a multimeter in the voltmeter position, measure the supply voltage of the **accelerator pedal**, component code **729** between the following connections:
- **3LS** on component **729**.
- **MB** on component **729**.

Expected value: 1.5 V

If the value is different from the expected value, check **the continuity** and **insulation** of the following connection:
- **3LS** between components **729** and **1063**.

After checking the connection **3LS**:
If the connection is faulty and if there is a repair procedure (see **Renault Technical Note 6015A, Repairing electrical wiring, Wiring: Precautions for repair**), repair the wiring, otherwise replace the wiring.
If the connection is correct, replace the **inverter**, component code **1063**.

Replace the **inverter**, component code **1063**.

If the fault is still present, contact the Techline.

AFTER REPAIR	Follow the instructions. Deal with any other faults. Clear the **stored** faults.

DF164 **DF486** **DF487** **PRESENT** **OR** **STORED**	PEDAL POTENTIOMETER CIRCUIT GANG 2

NOTES	**Special notes:** Vehicle in + after ignition feed position Inverter power relay stuck
	Note: Use the electric safety equipment Fault immobilising the vehicle
	Special notes: Use the **Wiring Diagrams Technical Note for Twizy**.

Use the electric safety elements, at position + after ignition feed, check **the voltage** of the following connection:
- **45AA** between components **1063**
- **A chassis earth MHA**

If the voltage is around 0 V, check the **continuity** and **insulation** of the following connection:
- **45AA** between components **1063** and **938**.

If the connection is faulty and if there is a repair procedure (see **Renault Technical Note 6015A, Repairing electrical wiring, Wiring: Precautions for repair**), repair the wiring, otherwise replace the wiring.

If the voltage is 12 V, disconnect the orange connector (RCS 800) between the traction battery and terminals B+ and B- of the inverter and measure the voltage at the **traction battery output** terminals:
If the voltage is approximately **60 V**, **contact Techline** before **replacing the traction battery**, **component code 938**.
If the voltage is **0 V**, **contact Techline** before **replacing the inverter, component code 1063**.

AFTER REPAIR	Follow the instructions. Deal with any other faults. Clear the **stored** faults.

TDB_V04_DF164/TDB_V04_DF486/TDB_V04_DF487

DF164 DF486 DF487 CONTINUED 1	

Switch the ignition to + after ignition feed.
Check the supply voltage of the **accelerator pedal**, component code **729** between the following connections:
- **3LU** on component **729**.
- **MAM** on component **729**.
- Expected value: 10 V

If the value is different from the expected value, check **the continuity** and **insulation** of the following connections:
- **3LU** between components **729** and **1063**.
- **MAM** between components **729** and **1063**.

After checking the **connections 3LU and MAM**:
If the connection is faulty and if there is a repair procedure (see **Renault Technical Note 6015A, Repairing electrical wiring, Wiring: Precautions for repair**), repair the wiring, otherwise replace the wiring.
If the connection is correct, replace the **inverter**, component code **1063**.

AFTER REPAIR	Follow the instructions. Deal with any other faults. Clear the **stored** faults.

DF164 DF486 DF487 CONTINUED 2	

Place the vehicle under the following conditions:
Connector for the **accelerator pedal**, component code **729** connected
Connector for the **inverter**, component code **1063** connected
Ignition on
No action on the accelerator pedal

Using a multimeter in the voltmeter position, measure the supply voltage of the **accelerator pedal**, component code **729** between the following connections:
- **3LW** on component **729**.
- **MAM** on component **729**.

Expected value: 0.75 V

If the value is different from the expected value, check **the continuity** and **insulation** of the following connection:
- **3LW** between components **729** and **1063**.

After checking the connection **3LW**:
If the connection is faulty and if there is a repair procedure (see **Renault Technical Note 6015A, Repairing electrical wiring, Wiring: Precautions for repair**), repair the wiring, otherwise replace the wiring.
If the connection is correct, replace the **inverter**, component code **1063**.

Replace the **inverter**, component code **1063**.

If the fault is still present, contact the Techline.

AFTER REPAIR	Follow the instructions. Deal with any other faults. Clear the **stored** faults.

DF194 PRESENT OR STORED	60 V BATTERY

NOTES	**Special notes:** Vehicle in + after ignition feed position Inverter power relay stuck
	Note: Use the electric safety equipment Fault immobilising the vehicle
	Special notes: Use the **Wiring Diagrams Technical Note for Twizy**.

Check the connection and condition of the connector **B + (60 V) inverter side**, component code **1063**.
If the connector is faulty and if there is a repair procedure (see **Technical Note 6015A (Renault), Repairing electrical wiring, Wiring: Precautions for repair**), repair the connector, otherwise replace the wiring.
Use the electric safety equipment and in the + after ignition feed, disconnect the 35-track connector for the inverter.
Check the **voltage** of the following connection:
- **45AA** between components **1063** and **938**.

If the voltage is around 0 V, check fuse **F21** (**5A**) of component **1016 of the passenger compartment fuse box**.
If the fuse is correct, check **the continuity** and **insulation** of the following connection:
- **45AA** between components **1063** and **938**.

If the connection is faulty and if there is a repair procedure (see **Renault Technical Note 6015A, Repairing electrical wiring, Wiring: Precautions for repair**), repair the wiring, otherwise replace the wiring.
If the fault is still present, contact Techline before replacing the traction battery.

AFTER REPAIR	Follow the instructions. Deal with any other faults. Clear the **stored** faults.

DF194 CONTINUED	

If the voltage is 12 V, place the vehicle in the + Start position and with the green GO indicator light illuminated on the instrument panel, measure the voltage between the B + and B- terminals on the inverter:
If the voltage is around **25 V**, **contact Techline** before replacing the **traction battery**, **component code 938**.
If the voltage is around **60 V**, **contact Techline** before replacing the **inverter, component code 1063**.

AFTER REPAIR	Follow the instructions. Deal with any other faults. Clear the **stored** faults.

DF402 **DF178** **PRESENT** **OR** **STORED**	60 V BATTERY

NOTES	**Special notes:** Vehicle in + after ignition feed position Inverter power relay stuck
	Note: Use the electric safety equipment Fault immobilising the vehicle
	Special notes: Use the **Wiring Diagrams Technical Note for Twizy**.

Use the electric safety elements, at position + after ignition feed, check **the voltage** of the following connection:
- **45AA** between components **1063**
- **A chassis earth MHA**

If the voltage is around 0 V, check the **continuity** and **insulation** of the following connection:
- **45AA** between components **1063** and **938**.

If the connection is faulty and if there is a repair procedure (see **Renault Technical Note 6015A, Repairing electrical wiring, Wiring: Precautions for repair**), repair the wiring, otherwise replace the wiring.
If the fault is still present, contact Techline before replacing the traction battery.

If the voltage is 12 V, disconnect the orange connector (RCS 800) between the traction battery and terminals B+ and B- of the inverter and measure the voltage at the **traction battery output** terminals:
If the voltage is approximately **60 V**, **contact Techline** before **replacing the traction battery, component code 938**.
If the voltage is **0 V**, **contact Techline** before **replacing the inverter, component code 1063**.

AFTER REPAIR	Follow the instructions. Deal with any other faults. Clear the **stored** faults.

TDB_V04_DF402/TDB_V04_DF178

DF263 **DF276** **PRESENT** **OR** **STORED**	BCB MULTIPLEX TRANSMISSION ABSENT

NOTES	**Special notes:** The fault is **present in all modes**. Loss of communication with the charger/converter computer.
	Note: If this fault **is present, there is no electric motor torque**. If the charger/converter opens the relay, the current = 0 A.
	Special notes: Use the **Wiring Diagrams Technical Note for Twizy**. Check that the CLIP diagnostic tool update is recent enough to be able to deal with faults on the vehicle.

Perform a test on the multiplex network (see **88B, Multiplexing**).
Make sure that the computers installed in the vehicle are the correct type and are compatible with the vehicle. Check that the computers are supplied correctly (earth, + battery, + accessories or + after ignition).
Check the **connection** and **condition** of the **inverter** connectors, component code **1063**. If the connectors are faulty and if there is a repair procedure (see **Renault Technical Note 6015A, Repairing electrical wiring, Wiring: Precautions for repair**), repair the connectors, otherwise replace the wiring.

AFTER REPAIR	Follow the instructions. Deal with any other faults. Clear the **stored** faults.

TDB_V04_DF263/TDB_V04_DF276

DF263 **DF276** **CONTINUED**	

Check the **connection** and **condition** of the charger connectors, component code **2093**. If the connectors are faulty and if there is a repair procedure (see **Renault Technical Note 6015A, Repairing electrical wiring, Wiring: Precautions for repair**), repair the connectors, otherwise replace the wiring.
Check the **connection** and **condition** of the diagnostic socket connectors, component code **225**. If the connectors are faulty and if there is a repair procedure (see **Renault Technical Note 6015A, Repairing electrical wiring, Wiring: Precautions for repair**), repair the connectors, otherwise replace the wiring.
Check the **insulation, continuity** and the **absence of interference resistance** of the following connections: • **133B** between components **1063** and **2093** • **133C** between components **1063** and **2093** If the connection is faulty and if there is a repair procedure (see **Renault Technical Note 6015A, Repairing electrical wiring, Wiring: Precautions for repair**), repair the wiring, otherwise replace the wiring.
If the fault is still present, contact the Techline.

AFTER REPAIR	Follow the instructions. Deal with any other faults. Clear the **stored** faults.

DF298 **DF330** **DF331** **DF332** **DF428** **DF429** **DF430** **DF431** **DF432** **PRESENT** **OR** **STORED**	LBC MULTIPLEX TRANSMISSION ABSENT

NOTES	**Special notes:** The fault is **present** in traction mode.
	Special notes: Use the **Wiring Diagrams Technical Note for Twizy**.

If the fault status is **stored,** turn a drive wheel and check whether **PR116 Electric motor speed** varies.
Check the connection and condition of the **inverter** connector, component code **1063**. If the connector is faulty and if there is a repair procedure (see **Technical Note 6015A (Renault), Repairing electrical wiring, Wiring: Precautions for repair**), repair the connector, otherwise replace the wiring.
Check the connection and condition of the speed sensor connector on the **traction motor**, component code **262**. If the connector is faulty and if there is a repair procedure (see **Technical Note 6015A (Renault), Repairing electrical wiring, Wiring: Precautions for repair**), repair the connector, otherwise replace the wiring.

AFTER REPAIR	Follow the instructions. Deal with any other faults. Clear the **stored** faults.

TDB_V04_DF330/TDB_V04_DF331/TDB_V04_DF332/TDB_V04_DF428/TDB_V04_DF429/TDB_V04_DF430/TDB_V04_DF431/
TDB_V04_DF432

DF298 **DF330** **DF331** **DF332** **DF428** **DF429** **DF430** **DF431** **DF432** **CONTINUED**	

Check the **continuity** and the **insulation** of the following connections:
- **155A** between components **262** and **1063**.
- **155B** between components **262** and **1063**.
- **155C** between components **262** and **1063**.
- **155D** between components **262** and **1063**.

If the connection is faulty and if there is a repair procedure (see **Renault Technical Note 6015A, Repairing electrical wiring, Wiring: Precautions for repair**), repair the wiring, otherwise replace the wiring.

Check the voltage between the following connections:
- **155C** on component **262.**
- **155D** on component **262.**

Expected value: **10 V**
If the value corresponds to the expected value, replace the **speed sensor** on the traction motor.

If the fault is still present, replace the **inverter, component code 1063**.

AFTER REPAIR	Follow the instructions. Deal with any other faults. Clear the **stored** faults.

DF403 PRESENT OR STORED	INVERTER POWER RELAY

NOTES	**Special notes:** The fault is present during + after ignition feed.
	Note: Immobilising fault.
	Special notes: Use the **Wiring Diagrams Technical Note for Twizy**.

To deal with this fault, it is necessary to lock out the vehicle and to use the appropriate safety equipment; see Technical Note 6037A.

Check the presence and condition of supply fuse **F22 (10 A)** of the **passenger compartment fuse and relay box**, component code **1016**:
Replace the fuses if the checks are not correct (see **MR 451 Mechanical, 81C, Fuses, Fuses: List and location of components**).

Check the **continuity** and **insulation** of the following connections:

- **BPR1** between components **1016** and **938**
- **MG1** between components **938** and the chassis earth.

Are the connections correct?

If the connection is faulty and if there is a repair procedure (see **Technical Note 6015A, (Renault).**
If the connection or connections are faulty and if there is a repair procedure (see **Renault Technical Note 6015A, Repairing electrical wiring, Wiring: Precautions for repair**), repair the wiring, otherwise replace the wiring.

AFTER REPAIR	Follow the instructions. Deal with any other faults. Clear the **stored** faults.

DF403 CONTINUED 1	

Using status **ET306 INVERTER POWER RELAY**, check that the status is **CLOSED** Request the specifications taken by the status according to the operating conditions.
Check the **status** and **connection** of the B+ connector for the **inverter**, component code **1063** (connector RCS800). If the connectors are faulty and if there is a repair procedure (see **Renault Technical Note 6015A, Repairing electrical wiring, Wiring: Precautions for repair**), repair the connectors, otherwise replace the wiring.
Check the voltage between the following connections during + after ignition feed: • **15AA** on component **1063.** • **MHA** on component **1063.** Expected value: **12 V** If the value corresponds to the expected value, check the voltage between the following connections in the + start position: • **+B** on component **1063.** • **-B** on component **1063.** Expected value: approximately **25 V** If the value does not correspond, contact Techline before replacing the **traction battery**, component code **938**

AFTER REPAIR	Follow the instructions. Deal with any other faults. Clear the **stored** faults.

DF403 CONTINUED 2	

Check the **condition** and **connection** of the **inverter**, component code **1063** If the connectors are faulty and if there is a repair procedure (see **Renault Technical Note 6015A, Repairing electrical wiring, Wiring: Precautions for repair**), repair the connectors, otherwise replace the wiring.
Check the continuity and insulation of the inverter power connections: • **15AA** between components **1063** and **938** • **MHA** between components **1063** and the chassis If the connection is faulty and if there is a repair procedure (see **Renault Technical Note 6015A, Repairing electrical wiring, Wiring: Precautions for repair**), repair the wiring, otherwise replace the wiring.
Check fuse **F02** (**20 A**) of the **passenger compartment fuse box** component code **1016.** If the fuse is OK, contact Techline before replacing the **traction battery**, component code **938**
If all the checks are correct, contact Techline before replacing the **inverter**, component code **1063.**

AFTER REPAIR	Follow the instructions. Deal with any other faults. Clear the **stored** faults.

DF353 **DF355** **PRESENT** **OR** **STORED**	INVERTER POWER RELAY

NOTES	**Special notes:** The fault is present during + after ignition feed.
	Note: Immobilising fault.
	Special notes: Use the **Wiring Diagrams Technical Note for Twizy**.

To deal with this fault, it is necessary to lock out the vehicle and to use the appropriate safety equipment; see Technical Note 6037A.

Ignition on
Use a multimeter in the voltmeter position to check the voltage of the **inverter**, component code **1063** between the following connections:
- **B+** between components **1063** and **938**
- **B-** between components **1063** and **938**

Expected value: 60 V

If the value measured corresponds to the expected value, use a multimeter in the voltmeter position to check the voltage between the following connections:
- **45AA** between **1063** and **938**

Chassis earth

Expected value: 12V

AFTER REPAIR	Follow the instructions. Deal with any other faults. Clear the **stored** faults.

DF353 DF355 CONTINUED 1	

If the value measured corresponds to the expected value, replace the **traction battery**, component code **938.**
If the value measured does not correspond to the expected value, perform the following checks:
Check the **condition** and **connection** of the connectors of the **inverter**, component code **1063** (connector RCS800).
If the connectors are faulty and if there is a repair procedure (see **Renault Technical Note 6015A, Repairing electrical wiring, Wiring: Precautions for repair**), repair the connectors, otherwise replace the wiring.
Check the **condition** and the **connection** of the connectors of the **traction Battery**, component code **938**.
If the connectors are faulty and if there is a repair procedure (see **Renault Technical Note 6015A, Repairing electrical wiring, Wiring: Precautions for repair**), repair the connectors, otherwise replace the wiring.
Check the **continuity** and **insulation** of the control connection of the inverter power relay:
- **45AA** between components **1063** and **938**

If the connection is faulty and if there is a repair procedure (see **Renault Technical Note 6015A, Repairing electrical wiring, Wiring: Precautions for repair**), repair the wiring, otherwise replace the wiring.
If the **inverter**, component code **1063** is **faulty,** replace the **inverter**, component code **1063**
If the **traction battery**, component code **938** is faulty, replace the **traction battery**, component code **938**.
If all the checks are correct, replace the **traction battery**, component code **938.**

Use a multimeter in the voltmeter position to check the voltage between the following connections:
- **45AA** between **1063** and **938**
- **Chassis earth**

Expected value: 12V

If the value measured corresponds to the expected value, replace the **inverter**, component code **1063**

AFTER REPAIR	Follow the instructions. Deal with any other faults. Clear the **stored** faults.

DF353 DF355 CONTINUED 2	

Check the **condition** and **connection** of the connectors of the **inverter**, component code **1063** (connector RCS800). If the connectors are faulty and if there is a repair procedure (see **Renault Technical Note 6015A, Repairing electrical wiring, Wiring: Precautions for repair**), repair the connectors, otherwise replace the wiring.
Check the **condition** and **connection** of the connectors of the **traction battery**, component code **938**. If the connectors are faulty and if there is a repair procedure (see **Renault Technical Note 6015A, Repairing electrical wiring, Wiring: Precautions for repair**), repair the connector, otherwise replace the wiring.
Check the **continuity** and **insulation** of the control connection of the inverter power relay: • **45AA** between components **1063** and **938** If the connection is faulty and if there is a repair procedure (see **Renault Technical Note 6015A, Repairing electrical wiring, Wiring: Precautions for repair**), repair the wiring, otherwise replace the wiring. If the **inverter**, component code **1063** is **faulty,** replace the **inverter**, component code **1063** If the **traction battery**, component code **938** is faulty, replace the **traction battery**, component code **938**.
If the fault is still present, contact the Techline.

AFTER REPAIR	Follow the instructions. Deal with any other faults. Clear the **stored** faults.

DF354 PRESENT OR STORED	INVERTER POWER RELAY

NOTES	**Special notes:** The fault is present during + after ignition feed.
	Note: Immobilising fault.
	Special notes: Use the **Wiring Diagrams Technical Note for Twizy**.

To deal with this fault, it is necessary to lock out the vehicle and to use the appropriate safety equipment; see Technical Note 6037A.

Ignition on
Use a multimeter in the voltmeter position to check the voltage between the following connections:
- **45AA** between **1063** and **938**
- **Chassis earth**

Expected value: 60 V

If the value measured does not correspond to the expected value, replace the **inverter**, component code **1063**

Check the **condition** and **connection** of the connectors of the **inverter**, component code **1063** (connector RCS800).
If the connectors are faulty and if there is a repair procedure (see **Renault Technical Note 6015A, Repairing electrical wiring, Wiring: Precautions for repair**), repair the connectors, otherwise replace the wiring.

AFTER REPAIR	Follow the instructions. Deal with any other faults. Clear the **stored** faults.

DF354 CONTINUED	

Check the **condition** and the **connection** of the connectors of the **traction Battery**, component code **938**. If the connectors are faulty and if there is a repair procedure (see **Renault Technical Note 6015A, Repairing electrical wiring, Wiring: Precautions for repair**), repair the connectors, otherwise replace the wiring.
Check the **insulation to + 60 V** of the control connection of the inverter power relay: • **45AA** between components **1063** and **938** If the connection is faulty and if there is a repair procedure (see **Renault Technical Note 6015A, Repairing electrical wiring, Wiring: Precautions for repair**), repair the wiring, otherwise replace the wiring. If the **inverter**, component code **1063** is **faulty,** replace the **inverter**, component code **1063** If the **traction battery**, component code **938** is faulty, replace the **traction battery**, component code **938**.
Replace the **traction battery**, component code **938**.

AFTER REPAIR	Follow the instructions. Deal with any other faults. Clear the **stored** faults.

DF366 PRESENT OR STORED	TDB MULTIPLEX TRANSMISSION ABSENT

NOTES	**Special notes:** The fault is **present in all situations**.
	Note: Immobilising fault.
	Special notes: Use the **Wiring Diagrams Technical Note for Twizy**.

Perform fault finding on the multiplex function (see **88B Multiplexing**).
Check that the computers physically present on the vehicle are definitely the correct computers and are compatible with the vehicle. Check that there is a good supply to the computers (earth, + battery, + accessories or + after ignition).
Check the **connection** and **condition** of the inverter connectors, component code **1063**. If the connectors are faulty and if there is a repair procedure (see **Renault Technical Note 6015A, Repairing electrical wiring, Wiring: Precautions for repair**), repair the connectors, otherwise replace the wiring.
Check the **insulation, continuity** and the **absence of interference resistance** of the following connections: • **133B** between components **1063** and **225** • **133C** between components **1063** and **225** If the connection is faulty and if there is a repair procedure (see **Renault Technical Note 6015A, Repairing electrical wiring, Wiring: Precautions for repair**), repair the wiring, otherwise replace the wiring.
If the fault is still present, contact the Techline.

AFTER REPAIR	Follow the instructions. Deal with any other faults. Clear the **stored** faults.

TDB_V04_DF366

DF415 PRESENT OR STORED	PEB

NOTES	**Special notes:** The fault is **present in Activation mode, Charge mode and Traction mode**.
	Note: Inverter internal fault Immobilising fault.
	Special notes: Use the **Wiring Diagrams Technical Note for Twizy**.

To deal with this fault, it is necessary to lock out the vehicle and to use the appropriate safety equipment; see Technical Note 6037A.
If the fault is still present, contact Techline before replacing the **inverter** (component code **1063**).

AFTER REPAIR	Follow the instructions. Deal with any other faults. Clear the **stored** faults.

DF416 PRESENT OR STORED	PEB

NOTES	**Special notes:** The fault is **present in Activation mode, Charge mode and Traction mode**.
	Note: Inverter internal fault Immobilising fault.
	Special notes: Use the **Wiring Diagrams Technical Note for Twizy**.

To deal with this fault, it is necessary to lock out the vehicle and to use the appropriate safety equipment; see Technical Note 6037A.
If the fault is still present, contact Techline before replacing the inverter, component code **1093**

AFTER REPAIR	Follow the instructions. Deal with any other faults. Clear the **stored** faults.

DF417 PRESENT OR STORED	PEB

NOTES	**Special notes:** The fault is **present in Activation mode**.
	Note: Inverter internal fault Immobilising fault.
	Special notes: Use the **Wiring Diagrams Technical Note for Twizy**.

To deal with this fault, it is necessary to lock out the vehicle and to use the appropriate safety equipment; see Technical Note 6037A.
Check the **connection** and **condition** of the connector of the **traction battery**, component code **938**. If the connectors are faulty and if there is a repair procedure (see **Renault Technical Note 6015A, Repairing electrical wiring, Wiring: Precautions for repair**), repair the connectors, otherwise replace the wiring.
Check the **connection** and **condition** of the connector of the **inverter**, component code **1063**. If the connectors are faulty and if there is a repair procedure (see **Renault Technical Note 6015A, Repairing electrical wiring, Wiring: Precautions for repair**), repair the connectors, otherwise replace the wiring.
Measure the power supply voltage of the **inverter**, component code **1063**, between the B + and B- terminals. **+ BAT_HV + BAT_HV** on the inverter If the value is close to 25 V, replace the **inverter**, component code **1063**.

AFTER REPAIR	Follow the instructions. Deal with any other faults. Clear the **stored** faults.

TDB_V04_DF417

DF417 CONTINUED	

Disconnect the 60 V wiring harness connecting the **traction battery**, component code **938** to the **inverter**, component code **1063**. Measure the voltage between the B+ and B- terminals of the **traction battery**, component code **938** If the value is close to 25 V, replace the **traction battery**, component code **938**.
Check the continuity and insulation of the power wiring harness between the **traction battery,** component code **938** and the **inverter**, component code **1063**. If the connection is faulty and if there is a repair procedure (see **Renault Technical Note 6015A, Repairing electrical wiring, Wiring: Precautions for repair**), repair the wiring, otherwise replace the wiring.
Contact Techline before replacing the **inverter**, component code **1063**.

AFTER REPAIR	Follow the instructions. Deal with any other faults. Clear the **stored** faults.

DF206 PRESENT OR STORED	INVERTER SUPPLY RELAY

NOTES	**Special notes:** The fault is **present in + START and Traction mode**.
	Note: The inverter has detected an overvoltage above 69 V If the status of this fault is recorded as present, the vehicle is immobilised. Electric motor torque is reduced to 0%. The inverter power relay is open and there is no electric motor torque at the output.
	Special notes: Use the **Wiring Diagrams Technical Note for Twizy**.

To deal with this fault, it is necessary to lock out the vehicle and to use the appropriate safety equipment; see Technical Note 6037A.
Disconnect the black 35-track connector of the **inverter**, component code **1063.** Switch on the + after ignition feed and check the voltage between connection **55CF** of the **inverter**, component code **1063** and the chassis. If the value is above **39 V**, contact Techline before replacing the **inverter**, component code **1063.**
Check the **connection** and **condition** of the **inverter** connectors, component code **1063**. If the connectors are faulty and if there is a repair procedure (see **Renault Technical Note 6015A, Repairing electrical wiring, Wiring: Precautions for repair**), repair the connectors, otherwise replace the wiring.
Check the **connection** and **condition** of the **traction battery** connectors, component code **938**. If the connectors are faulty and if there is a repair procedure (see **Renault Technical Note 6015A, Repairing electrical wiring, Wiring: Precautions for repair**), repair the connectors, otherwise replace the wiring.
Check the continuity and insulation of the following connection: • **55CF** between components **1063** and **938** If all the checks are correct, contact Techline before replacing the **traction battery**, component code **938**

AFTER REPAIR	Follow the instructions. Deal with any other faults. Clear the **stored** faults.

TDB_V04_DF206

DF157 PRESENT OR STORED	INVERTER SUPPLY RELAY

NOTES	**Special notes:** The fault is **present in Activation mode, Charge mode and Traction mode**.
	Note: The inverter has detected an undervoltage between 17 V and 39 V If the status of this fault is recorded as present, braking torque is reduced.
	Special notes: Use the **Wiring Diagrams Technical Note for Twizy**.

To deal with this fault, it is necessary to lock out the vehicle and to use the appropriate safety equipment; see Technical Note 6037A.
Turn the key to + start and check the voltage at the B + and B- terminals of the **traction battery**, component code **938**. If the value is between **60 V** and **69 V**, contact Techline before replacing the **traction battery**, component code **938.**
Contact Techline before replacing the **inverter**, component code **1063.**

AFTER REPAIR	Follow the instructions. Deal with any other faults. Clear the **stored** faults.

TDB_V04_DF157

DF030 PRESENT OR STORED	IMMOBILISER CIRCUIT

NOTES	**Special notes:** The fault is **present in Activation mode, Charge mode and Traction mode**.
	Note: Immobilising fault
	Special notes: Use the **Wiring Diagrams Technical Note for Twizy**.

To deal with this fault, it is necessary to lock out the vehicle and to use the appropriate safety equipment; see Technical Note 6037A.
Check the connection and condition of the **inverter** connector, component code **1063**. If the connector is faulty and if there is a repair procedure (see **Technical Note 6015A (Renault), Repairing electrical wiring, Wiring: Precautions for repair**), repair the connector, otherwise replace the wiring.
Check the connection and condition of the UCH connector, component code **645**. If the connector is faulty and if there is a repair procedure (see **Technical Note 6015A (Renault), Repairing electrical wiring, Wiring: Precautions for repair**), repair the connector, otherwise replace the wiring.
Check the **continuity** and **insulation** of the following connection: **H17** between components **645** and **1063.** If the connection is faulty and if there is a repair procedure (see **Renault Technical Note 6015A, Repairing electrical wiring, Wiring: Precautions for repair**), repair the wiring, otherwise replace the wiring.
If the fault is still present, contact Techline before replacing the **inverter**, component code **1063**.

AFTER REPAIR	Follow the instructions. Deal with any other faults. Clear the **stored** faults.

DF465 PRESENT OR STORED	ELECTRIC MOTOR

NOTES	**Special notes:** The fault is **present in Traction mode**.
	Note: Fault occurs after an overspeed detected by the inverter No electric motor torque, if the motor's speed of rotation has increased above 7600 rpm
	Special notes: Use the **Wiring Diagrams Technical Note for Twizy**.

To deal with this fault, it is necessary to lock out the vehicle and to use the appropriate safety equipment; see Technical Note 6037A.
No action, normal situation when the vehicle is on a steep slope. Explain to the customer that this is not a fault; this is a protective function to prevent damage to parts. If the fault is still present, carry out the following checks:
Check the connection and condition of the speed sensor connector on the **traction motor**, component code **262**. If the connector is faulty and if there is a repair procedure (see **Technical Note 6015A (Renault), Repairing electrical wiring, Wiring: Precautions for repair**), repair the connector, otherwise replace the wiring.

AFTER REPAIR	Follow the instructions. Deal with any other faults. Clear the **stored** faults.

TDB_V04_DF465

DF465 CONTINUED	

Check the **continuity** and the **insulation** of the following connections:
- **155A** between components **262** and **1063**.
- **155B** between components **262** and **1063**.
- **155C** between components **262** and **1063**.
- **155D** between components **262** and **1063**.

If the connection is faulty and if there is a repair procedure (see **Renault Technical Note 6015A, Repairing electrical wiring, Wiring: Precautions for repair**), repair the wiring, otherwise replace the wiring.

Check the voltage between the following connections:
155C on component **729.**
155D on component **729.**
Expected value: **10 V**
If the value corresponds to the expected value, contact Techline before replacing the **traction motor**, component code **262**

If the fault is still present, contact the Techline.

AFTER REPAIR	Follow the instructions. Deal with any other faults. Clear the **stored** faults.

DF463 PRESENT OR STORED	ELECTRIC MOTOR

NOTES	**Special notes:** The fault is **present in Traction mode**.
	Note: Fault occurs after an overspeed detected by the inverter No electric motor torque, if the motor's speed of rotation has increased above 11,000 rpm
	Special notes: Use the **Wiring Diagrams Technical Note for Twizy**.

To deal with this fault, it is necessary to lock out the vehicle and to use the appropriate safety equipment; see Technical Note 6037A.
No action, normal situation when the vehicle is on a steep slope. Explain to the customer that this is not a fault; this is a protective function to prevent damage to parts. If the fault is still present, carry out the following checks:
Check the connection and condition of the speed sensor connector on the **traction motor**, component code **262**. If the connector is faulty and if there is a repair procedure (see **Technical Note 6015A (Renault), Repairing electrical wiring, Wiring: Precautions for repair**), repair the connector, otherwise replace the wiring.
If the fault is still present, contact the Techline.

AFTER REPAIR	Follow the instructions. Deal with any other faults. Clear the **stored** faults.

TDB_V04_DF463

DF463 CONTINUED	

Check the **continuity** and the **insulation** of the following connections: • **155A** between components **262** and **1063**. • **155B** between components **262** and **1063**. • **155C** between components **262** and **1063**. • **155D** between components **262** and **1063**. If the connection is faulty and if there is a repair procedure (see **Renault Technical Note 6015A, Repairing electrical wiring, Wiring: Precautions for repair**), repair the wiring, otherwise replace the wiring.
Check the voltage between the following connections: • **155C** on component **729.** • **155D** on component **729.** Expected value: **10 V** If the value corresponds to the expected value, contact Techline before replacing the **traction motor**, component code **262**
If the fault is still present, contact the Techline.

AFTER REPAIR	Follow the instructions. Deal with any other faults. Clear the **stored** faults.

DF470 PRESENT OR STORED	ELECTRIC MOTOR

NOTES	**Special notes:** The fault is **present in Activation mode, Charge mode and Traction mode**.
	Note: Immobilising fault
	Special notes: Use the **Wiring Diagrams Technical Note for Twizy**.

To deal with this fault, it is necessary to lock out the vehicle and to use the appropriate safety equipment; see Technical Note 6037A.
If the fault status is **stored,** turn a drive wheel and check whether **PR116 Electric motor speed** varies.
Check the connection and condition of the **inverter** connector, component code **1063**. If the connector is faulty and if there is a repair procedure (see **Technical Note 6015A (Renault), Repairing electrical wiring, Wiring: Precautions for repair**), repair the connector, otherwise replace the wiring.
Check the connection and condition of the connector for the **connection to the traction motor**, component code **R262**. If the connection is faulty and if there is a repair procedure (see **Technical Note 6015A (Renault), Repairing electrical wiring, Wiring: Precautions for repair**), repair the wiring, otherwise replace the wiring.
Check the voltage between the following connections: • **155C** on component **904**. • **155D** on component **904**. Expected value: **10 V** If the value corresponds to the expected value, replace the speed sensor (rotor position sensor) of the electric motor, component code **904**.
If the fault is still present, contact the Techline.

AFTER REPAIR	Follow the instructions. Deal with any other faults. Clear the **stored** faults.

TDB_V04_DF470

DF472 PRESENT OR STORED	ELECTRIC MOTOR

NOTES	**Special notes:** The fault is **present in Activation mode, Charge mode and Traction mode**.
	Note: Inverter internal fault Immobilising fault
	Special notes: Use the **Wiring Diagrams Technical Note for Twizy**.

To deal with this fault, it is necessary to lock out the vehicle and to use the appropriate safety equipment; see Technical Note 6037A.
Check that the current does not exceed 140% of the maximum current.
Check the connection and condition of the wiring to the **inverter**, component code **1063**. If the connector is faulty and if there is a repair procedure (see **Technical Note 6015A (Renault), Repairing electrical wiring, Wiring: Precautions for repair**), repair the connector, otherwise replace the wiring.
Check the connection and condition of the wiring to the **traction motor**, component code **262**. If the connector is faulty and if there is a repair procedure (see **Technical Note 6015A (Renault), Repairing electrical wiring, Wiring: Precautions for repair**), repair the connector, otherwise replace the wiring.

AFTER REPAIR	Follow the instructions. Deal with any other faults. Clear the **stored** faults.

DF472 CONTINUED	

Check the **continuity** and the **insulation** of the following connections:
- **Phase U** between components **262** and **1063.**
- **Phase V** between components **262** and **1063.**
- **Phase W** between components **262** and **1063.**

If the connection is faulty and if there is a repair procedure (see **Renault Technical Note 6015A, Repairing electrical wiring, Wiring: Precautions for repair**), repair the wiring, otherwise replace the wiring.

If the fault is still present when restarting, contact Techline before replacing the inverter, component code **1063**.

AFTER REPAIR	Follow the instructions. Deal with any other faults. Clear the **stored** faults.

DF473 PRESENT OR STORED	ELECTRIC MOTOR

NOTES	**Special notes:** The fault is **present in Activation mode, Charge mode and Traction mode**.
	Note: Immobilising fault
	Special notes: Use the **Wiring Diagrams Technical Note for Twizy**.

To deal with this fault, it is necessary to lock out the vehicle and to use the appropriate safety equipment; see Technical Note 6037A.
Check the connection and condition of the wiring to the **inverter**, component code **1063**. If the connector is faulty and if there is a repair procedure (see **Technical Note 6015A (Renault), Repairing electrical wiring, Wiring: Precautions for repair**), repair the connector, otherwise replace the wiring.
Check the connection and condition of the wiring to the **traction motor**, component code **262**. If the connector is faulty and if there is a repair procedure (see **Technical Note 6015A (Renault), Repairing electrical wiring, Wiring: Precautions for repair**), repair the connector, otherwise replace the wiring.
Check the **continuity** and the **insulation** of the following connections: • **Phase U** between components **262** and **1063.** • **Phase V** between components **262** and **1063.** • **Phase W** between components **262** and **1063.** If the connection is faulty and if there is a repair procedure (see **Renault Technical Note 6015A, Repairing electrical wiring, Wiring: Precautions for repair**), repair the wiring, otherwise replace the wiring.
If the fault is still present when restarting, contact Techline before replacing the inverter, component code **1063**.

AFTER REPAIR	Follow the instructions. Deal with any other faults. Clear the **stored** faults.

DF459 PRESENT OR STORED	PEB

NOTES	**Special notes:** Immobilising fault
	Note: Electric motor torque is reduced at temperatures between 80°C and 90°C and the temperature warning light comes on. Above 100°C, the inverter power relay is open.
	Special notes: Use the **Wiring Diagrams Technical Note for Twizy**.

To deal with this fault, it is necessary to lock out the vehicle and to use the appropriate safety equipment; see Technical Note 6037A.
Leave the vehicle to cool down so that the temperature of the **inverter**, component code **1063** is less than 75°C. Check the temperature of the inverter using **PR162 Computer internal temperature**.
If the fault is still present, contact the Techline before replacing the **inverter**, component code **1063**.

AFTER REPAIR	Follow the instructions. Deal with any other faults. Clear the **stored** faults.

DF458 PRESENT OR STORED	PEB

NOTES	**Note:** Immobilising fault
	Special notes: Use the **Wiring Diagrams Technical Note for Twizy**.

Leave the vehicle to cool down so that the temperature of the **traction motor**, component code **262** is less than 150°C. Check the temperature of the inverter using **PR152 Electric motor temperature.** If the fault is no longer present, ignore the fault.
Check the connection and condition of the **inverter** connector, component code **1063**. If the connector is faulty and if there is a repair procedure (see **Technical Note 6015A (Renault), Repairing electrical wiring, Wiring: Precautions for repair**), repair the connector, otherwise replace the wiring.
Check the connection and condition of the connector for the **traction motor**, component code **262**. If the connector is faulty and if there is a repair procedure (see **Technical Note 6015A (Renault), Repairing electrical wiring, Wiring: Precautions for repair**), repair the connector, otherwise replace the wiring.
Check the **continuity** and the **insulation** of the following connections: • **55R** between components **262** and **1063**. • **MH** between components **262** and **1063.** • **MHA** between components **262** and **1063.** If the connection is faulty and if there is a repair procedure (see **Renault Technical Note 6015A, Repairing electrical wiring, Wiring: Precautions for repair**), repair the wiring, otherwise replace the wiring.
Use the second temperature sensor fitted to the **traction motor**, component code **262**. If the fault is still present, replace the **inverter**, component code **1063**.
If the second temperature sensor has already been used, contact Techline before replacing the **traction motor**, component code **262**.

AFTER REPAIR	Follow the instructions. Deal with any other faults. Clear the **stored** faults.

DF447 PRESENT OR STORED	ELECTRIC MOTOR TEMPERATURE

NOTES	**Special notes:** Electric motor below temperature The fault is present in all modes (activation, charge and traction)
	Note: The temperature of the electric motor is not a positive value.
	Special notes: Use the **Wiring Diagrams Technical Note for Twizy**.

Perform a road test so that the temperature of the **traction motor**, component code **262** is greater than -30°C. Check the temperature of the inverter using **PR152 Electric motor temperature.** If the fault is no longer present, ignore the fault.
Check the connection and condition of the **inverter** connector, component code **1063**. If the connector is faulty and if there is a repair procedure (see **Technical Note 6015A (Renault), Repairing electrical wiring, Wiring: Precautions for repair**), repair the connector, otherwise replace the wiring.
Check the connection and condition of the connector for the **traction motor**, component code **262**. If the connector is faulty and if there is a repair procedure (see **Technical Note 6015A (Renault), Repairing electrical wiring, Wiring: Precautions for repair**), repair the connector, otherwise replace the wiring.

AFTER REPAIR	Follow the instructions. Deal with any other faults. Clear the **stored** faults.

TDB_V04_DF447

DF447 CONTINUED	

Check the **continuity** and the **insulation** of the following connections: • **55R** between components **262** and **1063**. • **MH** between components **262** and **1063.** • **MHA** between components **262** and **1063.** If the connection is faulty and if there is a repair procedure (see **Renault Technical Note 6015A, Repairing electrical wiring, Wiring: Precautions for repair**), repair the wiring, otherwise replace the wiring.
Use the second temperature sensor fitted to the **traction motor**, component code **262**. If the fault is still present, replace the **inverter**, component code **1063**.
If the second temperature sensor has already been used, contact Techline before replacing the **traction motor**, component code **262**.

AFTER REPAIR	Follow the instructions. Deal with any other faults. Clear the **stored** faults.

DF358 PRESENT OR STORED	COMPUTER INTERNAL TEMPERATURE

NOTES	**Special notes:** In defect mode, the inverter output power is limited.
	Note: Electric motor torque is reduced at temperatures between 80°C and 90°C and the temperature warning light comes on.
	Special notes: Use the **Wiring Diagrams Technical Note for Twizy**.

Leave the vehicle to cool down so that the temperature of the **inverter**, component code **1063** is less than 75°C. Check the temperature of the inverter using **PR162 Computer internal temperature**
To deal with this fault, it is necessary to lock out the vehicle and to use the appropriate safety equipment; see Technical Note 6037A.
If the fault is still present, contact the Techline before replacing the **inverter**, component code **1063**.

AFTER REPAIR	Follow the instructions. Deal with any other faults. Clear the **stored** faults.

NOTES	Only check conformity after a full check with the **diagnostic tool**. The values shown in this conformity check are given as a guide. Application condition: **engine off, ignition on**.

MAIN SCREEN

Parameter or status checked or action		Display and notes	Fault finding
ET002:	+ 12 V AFTER IGNITION	**ACTIVE** (This status must be active when the ignition key is turned to position "**A**" (Accessories) and position "**M**" (On).	In the event of a fault, apply the interpretation of status **ET002**.
ET274:	+ 12 V SIDE LIGHTS FEED	**ACTIVE** (this status must be active when the lighting and signals switch is turned by one position)	In the event of a fault, apply the interpretation of status **ET274**.
ET295:	BCB INTERLOCK	**CLOSE** (This status indicates that the connector between the **traction battery** and the **charger/ converter** is correctly connected)	In the event of a fault, apply the interpretation of status **ET295.**
ET312:	PEB INTERLOCK	**CLOSE** (This status indicates that the connector between the **traction battery** and the **inverter** is correctly connected)	In the event of a fault, apply the interpretation of status **ET312**.

NOTES	Only check conformity after a full check with the **diagnostic tool**. The values shown in this conformity check are given as a guide. Application condition: **engine off, ignition on**.

MAIN SCREEN (CONTINUED 1)

Parameter or status checked or action		Display and notes	Fault finding
ET305:	TRACTION BATTERY	**SLOW CHARGING** **RAPID CHARGING** **TRANSIENT** **NORMAL** **QUICKDROP** (This status indicates the charge mode at a given time)	In the event of a fault, apply the interpretation of status **ET305**.
ET314:	INVERTER	**TWIZY 45** **TWIZY 75** (This status indicates the type of inverter fitted to the vehicle. The inverter for Twizy 45 is smaller than that for Twizy 75)	
ET306:	INVERTER POWER RELAY	**OPEN** **CLOSED** **FAULT** (Gives the status of the traction relay inside the battery tray. This relay is controlled by the inverter and authorises the power for the traction.)	In the event of a fault, apply the procedure for dealing with status **ET306**.
ET318:	CHARGER POWER RELAY	**OPEN** **CLOSED** **FAULT** (Gives the status of the charge relay inside the battery tray. This relay is controlled by the charger and authorises the power to charge the vehicle)	In the event of a fault, apply the procedure for dealing with status **ET318**.

NOTES	Only check conformity after a full check with the **diagnostic tool**. The values shown in this conformity check are given as a guide. Application condition: **engine off, ignition on**.

MAIN SCREEN (CONTINUED 2)

Parameter or status checked or action		Display and notes	Fault finding
ET323:	INVERTER SUPPLY RELAY	**OPEN** **CLOSED** **FAULT** (Gives the status of the supply relay inside the battery tray. This relay is controlled by the charger and authorises the supply to charge the vehicle)	In the event of a problem, apply the procedure for dealing with status **ET323**. In the event of a fault, apply the procedure for dealing with fault **DF157**
ET322:	AUTHORISATION TO START	**AUTHORISED** **PROHIBITED**	In the event of a problem, apply the procedure for dealing with status **ET322**.
PR160:	TRACTION BATTERY CHARGE	**Must be greater than 12%**	Below this value, recharge the traction battery
PR085:	BATTERY HEALTH STATUS	**Between 0% and 100%**	Below 75%, contact Techline before replacing the traction battery
PR087:	POWER MEASURED BY THE LBC	**Between 0 and 50 kWh**	

NOTES	Only check conformity after a full check with the **diagnostic tool**. The values shown in this conformity check are given as a guide. Application condition: **engine off, ignition on**.

MAIN SCREEN (CONTINUED 3)

Parameter or status checked or action		Display and notes	Fault finding
PR145:	CURRENT MEASURED BY LBC	**-200 A and 400 A**	
PR155:	TRACTION BATTERY VOLTAGE MEASUREMENT	**42 V and 58.8 V**	
PR135:	INVERTER SUPPLY	**Between 0 V and 60 V**	In the event of a problem, apply the procedure for dealing with status **ET323**. In the event of a fault, apply the procedure for dealing with fault **DF157**
PR148:	COMPUTER SUPPLY VOLTAGE	**Between 0 V and 15.87 V**	

NOTES	Only check conformity after a full check with the **diagnostic tool**. The values shown in this conformity check are given as a guide. Application condition: **engine off, ignition on**.

FUNCTION: ELECTRIC VEHICLE

SUB-FUNCTION: INVERTER

Parameter or status checked or action		Display and notes	Fault finding
ET314:	INVERTER	**TWIZY 45** **TWIZY 75** (This status indicates the type of inverter fitted to the vehicle. The inverter for Twizy 45 is smaller than that for Twizy 75)	
ET131:	POSITION D INDICATOR LIGHT	**OFF** **FLASHING** **ON**	In the event of a fault, apply the procedure for dealing with status **ET131**.
ET311:	POSITION N INDICATOR LIGHT	**OFF** **FLASHING** **ON**	In the event of a fault, apply the procedure for dealing with status **ET311**.
ET130:	POSITION R INDICATOR LIGHT	**OFF** **FLASHING** **ON**	In the event of a fault, apply the procedure for dealing with status **ET130**.
ET265:	PARKING BRAKE INDICATOR LIGHT	**OFF** **FLASHING** **ON**	In the event of a fault, apply the procedure for dealing with status **ET265**.

NOTES	Only check conformity after a full check with the **diagnostic tool**. The values shown in this conformity check are given as a guide. Application condition: **engine off, ignition on**.

FUNCTION: ELECTRIC VEHICLE (CONTINUED 1)

SUB-FUNCTION: INVERTER

Parameter or status checked or action		Display and notes	Fault finding
ET310:	ELECTRIC MOTOR	**OFF** **STARTING** **RUNNING**	In the event of a problem, apply the procedure for dealing with status **ET310**. In the event of a fault, apply the procedure for dealing with fault **DF471**
ET313:	BRAKE PEDAL	**PRESSED** **RELEASED**	In the event of a problem, apply the procedure for dealing with status **ET313**.
ET316:	+ START FEED	**INACTIVE** **ACTIVE**	In the event of a problem, apply the procedure for dealing with status **ET316**.
ET306:	INVERTER POWER RELAY	**OPEN** **CLOSED** **FAULT** (Gives the status of the traction relay inside the battery tray. This relay is controlled by the inverter and authorises the power for the traction.)	In the event of a fault, apply the procedure for dealing with status **ET306**.

NOTES	Only check conformity after a full check with the **diagnostic tool**. The values shown in this conformity check are given as a guide. Application condition: **engine off, ignition on**.

FUNCTION: ELECTRIC VEHICLE (CONTINUED 2)

SUB-FUNCTION: INVERTER

Parameter or status checked or action		Display and notes	Fault finding
PR146:	ACCELERATOR PEDAL POSITION	**Between 0 and 253 Ohms**	
PR144:	INVERTER INSTANT POWER	**-100%**	
PR116:	ENGINE SPEED	**-20,000 rpm**	
PR152:	ELECTRIC MOTOR TEMPERATURE	**-40°C**	
PR135:	INVERTER SUPPLY	**Between 0 V and 60 V**	In the event of a problem, apply the procedure for dealing with status **ET323**. In the event of a fault, apply the procedure for dealing with fault **DF157**

NOTES	Only check conformity after a full check with the **diagnostic tool**. The values shown in this conformity check are given as a guide. Application condition: **engine off, ignition on**.

FUNCTION: ELECTRIC VEHICLE

SUB-FUNCTION: CHARGER

Parameter or status checked or action		Display and notes	Fault finding
ET326:	AFTER IGNITION SEEN BY BCB	**ABSENT** **PRESENT**	In the event of a problem, apply the procedure for dealing with status **ET326**.
ET318:	CHARGER POWER RELAY	**OPEN** **CLOSED** **FAULT** (Gives the status of the charge relay inside the battery tray. This relay is controlled by the charger and authorises the power to charge the vehicle)	In the event of a fault, apply the procedure for dealing with status **ET318**.
ET323:	INVERTER SUPPLY RELAY	**OPEN** **CLOSED** **FAULT** (Gives the status of the supply relay inside the battery tray. This relay is controlled by the charger and authorises the supply to charge the vehicle)	In the event of a problem, apply the procedure for dealing with status **ET323**. In the event of a fault, apply the procedure for dealing with fault **DF157**
ET320:	TRACTION BATTERY CHARGING	**NO** **IN PROGRESS** **COMPLETED**	In the event of a problem, apply the procedure for dealing with status **ET320**.

NOTES	Only check conformity after a full check with the **diagnostic tool**. The values shown in this conformity check are given as a guide. Application condition: **engine off, ignition on**.

FUNCTION: ELECTRIC VEHICLE (CONTINUED 1)

SUB-FUNCTION: CHARGER

Parameter or status checked or action		Display and notes	Fault finding
ET322:	AUTHORISATION TO START	**AUTHORISED** **PROHIBITED**	In the event of a problem, apply the procedure for dealing with status **ET322**.
ET317:	TYPE OF ACTIVATION	**CUSTOMER** **TECHNICAL**	In the event of a problem, apply the procedure for dealing with status **ET317**.
ET319:	220 V SOCKET	**ABSENT** **PRESENT**	In the event of a problem, apply the procedure for dealing with status **ET319**.
ET325:	LBC STATUS SEEN BY THE BCB	**NONE** **SLOW CHARGING** **RAPID CHARGING** **NORMAL** **QUICKDROP**	In the event of a problem, apply the procedure for dealing with status **ET325**.
PR148:	COMPUTER SUPPLY VOLTAGE	**Between 9 V and 16 V**	
PR149:	DCDC REGULATION VOLTAGE	**12V**	
ET306:	INVERTER POWER RELAY	**OPEN** **CLOSED** **FAULT** (Gives the status of the traction relay inside the battery tray. This relay is controlled by the inverter and authorises the power for the traction.)	In the event of a fault, apply the procedure for dealing with status **ET306**.

NOTES	Only check conformity after a full check with the **diagnostic tool**. The values shown in this conformity check are given as a guide. Application condition: **engine off, ignition on**.

FUNCTION: ELECTRIC VEHICLE (CONTINUED 2)

SUB-FUNCTION: CHARGER

Parameter or status checked or action		Display and notes	Fault finding
PR146:	ACCELERATOR PEDAL POSITION	**0**	
PR144:	INVERTER INSTANT POWER	**-100%**	
PR116:	ENGINE SPEED	**-20,000 rpm**	
PR152:	ELECTRIC MOTOR TEMPERATURE	**-40°C**	
PR135:	INVERTER SUPPLY	**Between 0 V and 60 V**	In the event of a problem, apply the procedure for dealing with status **ET323**. In the event of a fault, apply the procedure for dealing with fault **DF157**

NOTES	Only check conformity after a full check with the **diagnostic tool**. The values shown in this conformity check are given as a guide. Application condition: **engine off, ignition on**.

FUNCTION: ELECTRIC VEHICLE

SUB-FUNCTION: TRACTION BATTERY

Parameter or status checked or action		Display and notes	Fault finding
PR083:	CUMULATIVE POWER CHARGE	**0 KWh**	
PR076:	TRACTION BATTERY TRAY TEMPERATURE	**-40°C**	
PR086:	LOWEST CELL VOLTAGE LEVEL	**Between 3 V and 4.3 V**	
PR084:	HIGHEST CELL VOLTAGE LEVEL	**Between 3 V and 4.3 V**	
PR085:	BATTERY HEALTH STATUS	**Between 0% and 100%**	Below 75%, contact Techline before replacing the traction battery
PR078:	HIGH VOLTAGE BATTERY TRAY MAX. TEMPERATURE	**Between -15°C and 48°C**	
PR087:	POWER MEASURED BY THE LBC	**Between 0 and 6.47 kWh**	

NOTES	Only check conformity after a full check with the **diagnostic tool**. The values shown in this conformity check are given as a guide. Application condition: **engine off, ignition on**.

FUNCTION: ELECTRIC VEHICLE (CONTINUED 1)

SUB-FUNCTION: TRACTION BATTERY

Parameter or status checked or action		Display and notes	Fault finding
ET297:	LBC FAULT	**ABSENT** **PRESENT**	In the event of a problem, apply the interpretation of status **ET297**.
ET298:	END OF CHARGE REQUEST	**OFF** **STARTING** **RUNNING**	In the event of a problem, apply the interpretation of status **ET298**.
ET295:	BCB INTERLOCK	**CLOSE** (This status indicates that the connector between the **traction battery** and the **charger/ converter** is correctly connected)	In the event of a fault, apply the interpretation of status **ET295.**
ET312:	PEB INTERLOCK	**CLOSE** (This status indicates that the connector between the **traction battery** and the **inverter** is correctly connected)	In the event of a fault, apply the interpretation of status **ET312**.
ET302:	TRACTION RELAY PROHIBITED CLOSURE	**AUTHORISED** **PROHIBITED**	In the event of a problem, apply the interpretation of status **ET302**.

NOTES	Only check conformity after a full check with the **diagnostic tool**. The values shown in this conformity check are given as a guide. Application condition: **engine off, ignition on**.

FUNCTION: ELECTRIC VEHICLE (CONTINUED 2)

SUB-FUNCTION: TRACTION BATTERY

Parameter or status checked or action		Display and notes	Fault finding
ET305:	TRACTION BATTERY	**SLOW CHARGING** **RAPID CHARGING** **TRANSIENT** **NORMAL** **QUICKDROP** (This status indicates the charge mode at a given time)	In the event of a fault, apply the interpretation of status **ET305**.
PR145:	CURRENT MEASURED BY LBC	**-200 A and 400 A**	
PR090:	TRACTION BATTERY TOTAL KM / MILEAGE	**0 miles and 393,210 miles (0 km and 655,350 kms)**	
PR155:	TRACTION BATTERY VOLTAGE MEASUREMENT	**Between 42 V and 58.8 V**	
PR089:	POWER MEASURED BY THE LBC	**Between 0 kW and 6.47 kW**	
PR088:	RECUPERATIVE BRAKING POWER	**Between 0 kW and 2.1 kW**	

NOTES	Only check conformity after a full check with the **diagnostic tool**. The values shown in this conformity check are given as a guide. Application condition: **engine off, ignition on**.

FUNCTION: INSTRUMENT PANEL

SUB-FUNCTION: DISPLAY

Parameter or status checked or action		Display and notes	Fault finding
ET002:	+ 12 V AFTER IGNITION	**ACTIVE** (This status must be active when the ignition key is turned to position "**A**" (Accessories) and position "**M**" (On).	In the event of a fault, apply the interpretation of status **ET002**.
ET274:	+ 12 V SIDE LIGHTS FEED	**ACTIVE** (this status must be active when the lighting and signals switch is turned by one position)	In the event of a fault, apply the interpretation of status **ET274**.
ET245:	INDICATORS	**INACTIVE** **ACTIVE**	In the event of a fault, apply the interpretation of status **ET245**.
ET109:	SERVICE WARNING LIGHT	**INACTIVE** **ACTIVE**	In the event of a fault, apply the interpretation of status **ET109**.
ET108:	STOP WARNING LIGHT	**INACTIVE** **ACTIVE**	In the event of a problem, apply the interpretation of status **ET108**.
PR009:	MILEOMETER	**Between 0 miles and 119,999 miles (0 km and 199,999 kms)**	

ET002	+ 12 V AFTER IGNITION
ET108	STOP WARNING LIGHT
ET109	SERVICE WARNING LIGHT
ET130	POSITION R INDICATOR LIGHT
ET131	POSITION D INDICATOR LIGHT
ET169	PASSENGER PRESENCE DETECTED
ET245	INDICATORS
ET265	PARKING BRAKE INDICATOR LIGHT
ET274	+ 12 V SIDE LIGHTS FEED
ET295	BCB INTERLOCK
ET297	LBC FAULT
ET298	END OF CHARGE REQUEST
ET302	TRACTION RELAY PROHIBITED CLOSURE
ET305	TRACTION BATTERY
ET306	INVERTER POWER RELAY
ET310	ELECTRIC MOTOR
ET311	POSITION N INDICATOR LIGHT

ET312	PEB INTERLOCK
ET313	BRAKE PEDAL
ET314	INVERTER
ET316	+ START
ET317	TYPE OF ACTIVATION
ET318	CHARGER POWER RELAY
ET319	220 V SOCKET
ET320	TRACTION BATTERY CHARGING
ET322	AUTHORISATION TO START
ET323	INVERTER SUPPLY RELAY
ET324	BOOST MODE WARNING LIGHT
ET325	LBC STATUS SEEN BY THE BCB
ET326	AFTER IGNITION SEEN BY BCB
ET331	COMPUTER INTERNAL TEMPERATURE
ET332	INVERTER IMMOBILISER CODE

ET002	+ 12 VOLTS AFTER IGNITION

NOTES	There must be no present or stored faults. Switch on the ignition. The status must be ACTIVE.
	Special note: Use the Wiring Diagrams Technical Note for Twizy.

ET002: **INACTIVE with the ignition on.**
Check fuse **F1** (**50 A**) of the **fuse holder module 2,** component code **1793.**
Check the connection and condition of the connector for the **immobiliser switch**, component code **104**. If the connector is faulty and if there is a repair procedure (see **Technical Note 6015A (Renault), Repairing electrical wiring, Wiring: Precautions for repair**), repair the connector, otherwise replace the wiring.
Check for **+12 V** after ignition feed on the **immobiliser switch**, component code **104** on the following connection: • **A** of component **104**.

AFTER REPAIR	Carry out another fault finding check on the system. Deal with any other faults. Clear the **stored** faults.

TDB_V04_ET002

ET002 CONTINUED	

Check the **continuity** and **insulation to earth** of the following connection: • **A** between components **104** and **1016**. If the connection or connections are faulty and if there is a repair procedure (see **Technical Note 6015A (Renault) or Technical Note 9804A (Dacia), Electrical wiring repair, Wiring: Precautions for repair**), repair the wiring, otherwise replace it.
Check for **+12 V** after ignition feed on the **immobiliser switch**, component code **104** on the following connection: • **BP13** of component **104**. If the value corresponds to the expected value, replace the **immobiliser switch,** component code **104.**
Check the **continuity** and **insulation to earth** of the following connection: • **BP13** between components **104** and **1793**. If the connection or connections are faulty and if there is a repair procedure (see **Technical Note 6015A (Renault), Repairing electrical wiring, Wiring: Precautions for repair**), repair the wiring, otherwise replace it.
If the fault is still present, contact the techline.

AFTER REPAIR	Carry out another fault finding check on the system. Deal with any other faults. Clear the **stored** faults.

ET108	STOP WARNING LIGHT

NOTES	The warning light illuminates when an important technical fault appears. The vehicle must be stopped.
	Special note: Use the Wiring Diagrams Technical Note for Twizy.

Illumination of the warning light, for this project, is linked exclusively to a fault code.
Deal with all the faults to clear the STOP warning light.
If there is no fault and the warning light is still lit, run command **RZ001 FAULT MEMORY**. If the fault is still present, contact Techline.

AFTER REPAIR	Carry out another fault finding check on the system. Deal with any other faults. Clear the **stored** faults.

TDB_V04_ET108

ET109	SERVICE WARNING LIGHT

NOTES	The warning light illuminates when an important technical fault appears. The vehicle must be stopped.
	Special note: Use the Wiring Diagrams Technical Note for Twizy.

Illumination of the warning light, for this project, is linked exclusively to a fault code.
Deal with all the faults to clear the STOP warning light.
If there is no fault and the warning light is still lit, run command **RZ001 FAULT MEMORY**. If the fault is still present, contact Techline.

AFTER REPAIR	Carry out another fault finding check on the system. Deal with any other faults. Clear the **stored** faults.

TDB_V04_ET109

ET130 **ET131** **ET311**	POSITION R INDICATOR LIGHT POSITION D INDICATOR LIGHT POSITION N INDICATOR LIGHT

NOTES	**Special note:** Use the **Wiring Diagrams Technical Note for Twizy**.

ET002: OFF FLASHING ON
Warning light remains **OFF**
Run fault finding on the multiplex network.
Check the presence and condition of fuse **F20 (10 A)** in the **passenger compartment fuse and relay box** (component code **1016**): Replace the fuses if the checks are not correct (see **MR 451 Mechanical, 81C, Fuses, Fuses: List and location of components**).
Check the connection and condition of the connector for the **shift pattern control**, component code **129**. If the connector is faulty and if there is a repair procedure (see **Technical Note 6015A (Renault), Repairing electrical wiring, Wiring: Precautions for repair**), repair the connector, otherwise replace the wiring.

AFTER REPAIR	Carry out another fault finding check on the system. Deal with any other faults. Clear the **stored** faults.

ET130 **ET131** **ET311** **CONTINUED**	

Check the connection and condition of the **passenger compartment fuse and relay box**, component code **1016**. If the connector is faulty and if there is a repair procedure (see **Technical Note 6015A (Renault), Repairing electrical wiring, Wiring: Precautions for repair**), repair the connector, otherwise replace the wiring.
Check the **+ after ignition feed** on **track 3** and **track 7** of the **shift pattern control**, component code **129**.
Check the **continuity** and **insulation** of the following connection: • **LPD** between components **129** and **1016** • **MAM** between components **129** and the **earth** • **55N** between components **129** and **1016** • **55L** between components **129** and **1016** If the connection is faulty and if there is a repair procedure (see **Renault Technical Note 6015A, Repairing electrical wiring, Wiring: Precautions for repair**), repair the wiring, otherwise replace the wiring.
If the checks are correct and the other warning lights illuminate on the instrument panel (other than the one with the fault), replace the **instrument panel**, component code **247**.

AFTER REPAIR	Carry out another fault finding check on the system. Deal with any other faults. Clear the **stored** faults.

ET245	INDICATORS

NOTES	There must be no **present** or **stored** faults. Switch on the ignition. Activate the direction indicator control The status must be ACTIVE.
	Special note: Use the **Wiring Diagrams Technical Note for Twizy**.

ETS45: INACTIVE with the ignition on
Check the connection and condition of the connector for the direction indicator, component code **209**. If the connector is faulty and if there is a repair procedure (see **Technical Note 6015A (Renault), Repairing electrical wiring, Wiring: Precautions for repair**), repair the connector, otherwise replace the wiring.
Check for the **presence** of **+12 V** after ignition feed on the **switch stalk**, component code **209** on the following connections: • **64T** of component **209** • **64S** of component **209**
Check the **continuity** and **insulation to earth** of the following connections: • **64T** of component **209** • **64S** of component **209** If the connection or connections are faulty and if there is a repair procedure (see **Technical Note 6015A (Renault), Repairing electrical wiring, Wiring: Precautions for repair**), repair the wiring, otherwise replace it.

AFTER REPAIR	Carry out another fault finding check on the system. Deal with any other faults. Clear the **stored** faults.

TDB_V04_ET245

ET245 CONTINUED	

Check for the **presence** of **+12 V** after ignition feed on the **switch stalk**, component code **209** on the following connection:
- **BP13** of component **209**.

If the value corresponds to the expected value, replace the **switch stalk,** component code **209.**

Check the **continuity** and **insulation to earth** of the following connection:
- **BP13** between components **104** and **1793**.

If the connection or connections are faulty and if there is a repair procedure (see **Technical Note 6015A (Renault), Repairing electrical wiring, Wiring: Precautions for repair**), repair the wiring, otherwise replace it.

If all the checks are correct, replace the **switch stalk,** component code **209.**
If the fault is still present, contact the techline.

AFTER REPAIR	Carry out another fault finding check on the system. Deal with any other faults. Clear the **stored** faults.

ET265	PARKING BRAKE INDICATOR LIGHT

NOTES	**Special note:** The parking brake warning light must be **OFF**, when the handbrake is not applied and must be **ON** when the handbrake is applied. The parking brake warning light is **FLASHING**: while the parking brake is released and when pressing the brake pedal at the same time. Use the **Wiring Diagrams Technical Note for Twizy**.

The warning light remains OFF.
Check the connection and condition of the connector for the **handbrake switch**, component code **156**. If the connector is faulty and if there is a repair procedure (see **Technical Note 6015A (Renault), Repairing electrical wiring, Wiring: Precautions for repair**), repair the connector, otherwise replace the wiring.
With the connector for the parking brake switch disconnected and the brake engaged, check the continuity between **tracks 1** and **2** of component **156**. If the continuity is incorrect, replace the parking brake switch, component code **156**.
Check the **+ after ignition** feed on **track 1** of the **handbrake switch,** component code **156**.

AFTER REPAIR	Carry out another fault finding check on the system. Deal with any other faults. Clear the **stored** faults.

TDB_V04_ET265

ET265 CONTINUED	

Check the **continuity** and **insulation** of the following connection: • **65A** between components **156** and **1285** If the connection is faulty and if there is a repair procedure (see **Renault Technical Note 6015A, Repairing electrical wiring, Wiring: Precautions for repair**), repair the wiring, otherwise replace the wiring.
Check the connection and condition of the connector for the **instrument panel**, component code **247**. If the connector is faulty and if there is a repair procedure (see **Technical Note 6015A (Renault), Repairing electrical wiring, Wiring: Precautions for repair**), repair the connector, otherwise replace the wiring.
Check the **continuity** and **insulation** of the following connection: **H1** between components **156** and **247**. If the connection is faulty and if there is a repair procedure (see **Renault Technical Note 6015A, Repairing electrical wiring, Wiring: Precautions for repair**), repair the wiring, otherwise replace the wiring.
If the checks are correct, replace the **instrument panel**, component code **247**.

The warning light remains FLASHING
• Check the **insulation** of connection **65A** in relation to connection **H1**. • Check the **insulation** of connection **65A** in relation to **earth**. If the connection is faulty and if there is a repair procedure (see **Technical Note 6015A (Renault), Repairing electrical wiring, Wiring: Precautions for repair**), repair the wiring, otherwise replace the wiring.

AFTER REPAIR	Carry out another fault finding check on the system. Deal with any other faults. Clear the **stored** faults.

ET274	+ 12 V SIDE LIGHTS FEED

NOTES	There must be no **present** or **stored** faults. Switch on the ignition. Activate the side lights command The status must be "active"
	Special note: Use the **Wiring Diagrams Technical Note for Twizy**.

ET274: INACTIVE with the ignition on
Check the presence and condition of fuses **F19** (**10 A**) **and F20** (**10 A**) on the **passenger compartment fuse and relay box**, component code **1016**
Check the connection and condition of the connector for the side lights, component code **209.** If the connector is faulty and if there is a repair procedure (see **Technical Note 6015A (Renault), Repairing electrical wiring, Wiring: Precautions for repair**), repair the connector, otherwise replace the wiring.
Check the **+12 V after ignition feed** on connection **L** of the **switch stalk**, component code **209**.
Check the **continuity** and **insulation to earth** of the following connection: • **L** between components **209** and **1016**. If the connection or connections are faulty and if there is a repair procedure (see **Technical Note 6015A (Renault), Repairing electrical wiring, Wiring: Precautions for repair**), repair the wiring, otherwise replace it.

AFTER REPAIR	Carry out another fault finding check on the system. Deal with any other faults. Clear the **stored** faults.

TDB_V04_ET274

ET274 CONTINUED	

Check the **+12 V after ignition feed** on the **switch stalk**, component code **209** on the following connection:
- **BP13** of component **209**.

If the value corresponds to the expected value, replace the **switch stalk,** component code **209.**

Check the **continuity** and **insulation to earth** of the following connection:
- **BP13** between components **209** and **1793**.

If the connection or connections are faulty and if there is a repair procedure (see **Technical Note 6015A (Renault), Repairing electrical wiring, Wiring: Precautions for repair**), repair the wiring, otherwise replace it.

If the fault is still present, contact the techline.

AFTER REPAIR	Carry out another fault finding check on the system. Deal with any other faults. Clear the **stored** faults.

ET295	BCB INTERLOCK

NOTES	There must be no **present** or **stored** faults. Switch on the ignition.
	Special note: Use the **Wiring Diagrams Technical Note for Twizy**.

ET295: CLOSED	
The connector for the wiring harness connecting the **traction battery** (component code **938**) to the **charger**/ c**onverter** (component code **2093**) is correctly connected on the **traction battery** side (component code **938**).	
ET295: OPEN	
The connector on the **traction battery** (component code **938**) for the wiring harness connecting the **traction battery** (component code **938**) to the **charger/converter** (component code **2093**) is not connected properly or is disconnected. If this status is not required, follow the procedure below.	
Switch off the ignition. Disconnect and check the condition of the connector on the **traction battery** (component code **938**). for the wiring harness connecting the **traction battery** (component code **938**) to the **charger/converter** (component code **2093**). Reconnect the connector for the wiring harness connecting the **traction battery** (component code **938**) to the **charger/converter** (component code **2093**) on the **traction battery** side (component code **938**). Switch on the ignition and check status **ET312.** If the status still open, repeat this operation several times If the fault is still present, repair the connector, otherwise replace the wiring (see **Technical Note 6015A (Renault), Repairing electrical wiring, Wiring: Precautions for repair**).	
If the fault is still present, contact the techline.	

AFTER REPAIR	Carry out another fault finding check on the system. Deal with any other faults. Clear the **stored** faults.

TDB_V04_ET295

ET298	END OF CHARGE REQUEST

NOTES	**Special note:** Use the **Wiring Diagrams Technical Note for Twizy**.

ET298: INACTIVE
In Charge mode (220 V connected), the status is **INACTIVE** when the **traction battery** charge status is less than 100%. In this case, **ET320** is **IN PROGRESS**.
If this is not the case, contact Techline.
ET298: ACTIVE
In Charge mode (220 V connected), the status is **ACTIVE** as soon as the **traction battery** charge status is 100%. In this case, **ET320** is **COMPLETE**.
If this is not the case, contact Techline.

AFTER REPAIR	Carry out another fault finding check on the system. Deal with any other faults. Clear the **stored** faults.

TDB_V04_ET298

ET302	TRACTION RELAY PROHIBITED CLOSURE

NOTES	**Special note:** Use the **Wiring Diagrams Technical Note for Twizy**.

ET302: AUTHORISED
To ensure that the inverter power relay is closed, the following conditions must be met: • Vehicle not connected to the 220 V mains supply. • The traction battery charge must be sufficient. • Ignition at + START
ET302: PROHIBITED
The status is PROHIBITED if the above conditions are not met. If the conditions are met and the status is PROHIBITED, follow the procedure below.
Check for the presence of the following faults: • **DF402** • **DF353** • **DF354** • **DF355** • **DF403** If any one of these faults is present, deal with them as a priority

AFTER REPAIR	Carry out another fault finding check on the system. Deal with any other faults. Clear the **stored** faults.

TDB_V04_ET302

ET302 CONTINUED	

Check the connection and condition of the connector of the **traction battery**, component code **938.** If the connector is faulty and if there is a repair procedure (see **Technical Note 6015A (Renault), Repairing electrical wiring, Wiring: Precautions for repair**), repair the connector, otherwise replace the wiring.
Check the connection and condition of the **inverter** connector, component code **1063**. If the connector is faulty and if there is a repair procedure (see **Technical Note 6015A (Renault), Repairing electrical wiring, Wiring: Precautions for repair**), repair the connector, otherwise replace the wiring. Also use status **ET312: PEB INTERLOCK** if the status is OPEN while the connector is connected, refer to status **ET295: BCB INTERLOCK** in the **Fault finding – Interpretation of statuses section**
Check the **continuity** and **insulation to earth** of the following connection: **45AA** between components **1063** and **938**. If the connection is faulty and if there is a repair procedure (see **Renault Technical Note 6015A, Repairing electrical wiring, Wiring: Precautions for repair**), repair the wiring, otherwise replace the wiring.
Contact the Techline.

AFTER REPAIR	Carry out another fault finding check on the system. Deal with any other faults. Clear the **stored** faults.

ET305	TRACTION BATTERY

NOTES	**Special note:** Use the **Wiring Diagrams Technical Note for Twizy**.

ET305: SLOW CHARGING
The status should change to "SLOW CHARGING" as soon as the charging lead is connected to the 220 V mains supply If the vehicle does not charge, deal with any faults present. If no fault is present, refer to ALP No. 8 **Traction battery recharging: impossible** If the vehicle still does not charge, contact Techline.
ET305: NORMAL
The vehicle is in traction mode, charging is impossible

AFTER REPAIR	Carry out another fault finding check on the system. Deal with any other faults. Clear the **stored** faults.

TDB_V04_ET305

ET306	INVERTER POWER RELAY

NOTES	There must be no **present** or **stored** faults. The status must be "closed"
	Special note: Use the **Wiring Diagrams Technical Note for Twizy**.

ET306: OPEN with the ignition on.
Check the **condition** and **connection** of the connectors for the **inverter,** component code **1063.** If the connectors are faulty and if there is a repair procedure (see **Renault Technical Note 6015A, Repairing electrical wiring, Wiring: Precautions for repair**), repair the connectors, otherwise replace the wiring.
Check the **condition** and the **connection** of the connectors of the **traction Battery**, component code **938**. If the connectors are faulty and if there is a repair procedure (see **Renault Technical Note 6015A, Repairing electrical wiring, Wiring: Precautions for repair**), repair the connectors, otherwise replace the wiring.
Check the inverter power supply, B+ and B- terminals.

AFTER REPAIR	Carry out another fault finding check on the system. Deal with any other faults. Clear the **stored** faults.

TDB_V04_ET306

ET306 CONTINUED	

Check the continuity and insulation of the inverter power connections:
- B+ between components **1063** and **938**
- B- between components **1063** and **938**

If the connection is faulty and if there is a repair procedure (see **Renault Technical Note 6015A, Repairing electrical wiring, Wiring: Precautions for repair**), repair the wiring, otherwise replace the wiring.

Check the continuity and insulation of the control connection of the inverter power relay (CP1):
- **45AA** between components **1063** and **938**

If the connection is faulty and if there is a repair procedure (see **Renault Technical Note 6015A, Repairing electrical wiring, Wiring: Precautions for repair**), repair the wiring, otherwise replace the wiring.

Contact Techline before replacing the traction battery, component code 938

AFTER REPAIR	Carry out another fault finding check on the system. Deal with any other faults. Clear the **stored** faults.

ET310	ELECTRIC MOTOR

NOTES	There must be no **present** or **stored** faults.
	Special note: Use the **Wiring Diagrams Technical Note for Twizy**.

ET310: STARTING with the ignition on.
Check the electrical wiring between the **inverter**, component code **1063** and the **UCH**, component code **645**.
Check the connection and condition of the **inverter** connector, component code **1063**. If the connector is faulty and if there is a repair procedure (see **Technical Note 6015A (Renault), Repairing electrical wiring, Wiring: Precautions for repair**), repair the connector, otherwise replace the wiring.
Check the connection and condition of the connector for the **UCH**, component code **645**. If the connector is faulty and if there is a repair procedure (see **Technical Note 6015A (Renault), Repairing electrical wiring, Wiring: Precautions for repair**), repair the connector, otherwise replace the wiring.
Check the **continuity** and **insulation** of the following connection: **H17** between components **645** and **1063**. If the connection is faulty and if there is a repair procedure (see **Renault Technical Note 6015A, Repairing electrical wiring, Wiring: Precautions for repair**), repair the wiring, otherwise replace the wiring.
If the fault is still present, contact the Techline.

AFTER REPAIR	Carry out another fault finding check on the system. Deal with any other faults. Clear the **stored** faults.

TDB_V04_ET310

ET310 CONTINUED 1	

ET310: STARTING with the ignition on.
Check the speed sensor on the **traction motor**, component code **262**
If the fault status is **stored,** turn a drive wheel and check whether **PR116 ELECTRIC MOTOR SPEED** varies.
Check the connection and condition of the **inverter** connector, component code **1063**. If the connector is faulty and if there is a repair procedure (see **Technical Note 6015A (Renault), Repairing electrical wiring, Wiring: Precautions for repair**), repair the connector, otherwise replace the wiring.
Check the connection and condition of the speed sensor connector on the **traction motor**, component code **262**. If the connector is faulty and if there is a repair procedure (see **Technical Note 6015A (Renault), Repairing electrical wiring, Wiring: Precautions for repair**), repair the connector, otherwise replace the wiring.

AFTER REPAIR	Carry out another fault finding check on the system. Deal with any other faults. Clear the **stored** faults.

ET310 CONTINUED 2	

Check the **continuity** and the **insulation** of the following connections:
- **155A** between components **262** and **1063**.
- **155B** between components **262** and **1063**.
- **155C** between components **262** and **1063**.
- **155D** between components **262** and **1063**.

If the connection is faulty and if there is a repair procedure (see **Renault Technical Note 6015A, Repairing electrical wiring, Wiring: Precautions for repair**), repair the wiring, otherwise replace the wiring.

Check the voltage between the following connections:
- **155C** on component **729.**
- **155D** on component **729.**

Expected value: **10 V**
If the value corresponds to the expected value, contact Techline before replacing the traction motor, component code **262**

If the fault is still present, contact the Techline.

AFTER REPAIR	Carry out another fault finding check on the system. Deal with any other faults. Clear the **stored** faults.

ET310 CONTINUED 3	

ET310: STARTING with the ignition on.
Check the phases of the **traction motor**, component code **262.**
Check the connection and condition of the **inverter** connector, component code **1063**. If the connector is faulty and if there is a repair procedure (see **Technical Note 6015A (Renault), Repairing electrical wiring, Wiring: Precautions for repair**), repair the connector, otherwise replace the wiring.
Check the connection and condition of the connectors for the **traction motor**, component code **262**. If the connectors are faulty and if there is a repair procedure (see **Technical Note 6015A (Renault), Repairing electrical wiring, Wiring: Precautions for repair**), repair the connectors, otherwise replace the wiring.
Check the **continuity** and the **insulation** of the following connections: • **Phase U** between components **262** and **1063.** • **Phase V** between components **262** and **1063.** • **Phase W** between components **262** and **1063.** If the connection is faulty and if there is a repair procedure (see **Renault Technical Note 6015A, Repairing electrical wiring, Wiring: Precautions for repair**), repair the wiring, otherwise replace the wiring.
If the fault is still present, contact the Techline.

AFTER REPAIR	Carry out another fault finding check on the system. Deal with any other faults. Clear the **stored** faults.

ET310 CONTINUED 4	

ET310: STARTING with the ignition on.
Check the resistance of the **traction motor**, component code **262**.
Check the connection and condition of the connectors for the **traction motor**, component code **262**. If the connectors are faulty and if there is a repair procedure (see **Technical Note 6015A (Renault), Repairing electrical wiring, Wiring: Precautions for repair**), repair the connectors, otherwise replace the wiring.
Check the wheel speed value using parameter **PR116**: **ELECTRIC MOTOR SPEED**. The value should be greater than 0.
If the fault is still present, contact the Techline.

AFTER REPAIR	Carry out another fault finding check on the system. Deal with any other faults. Clear the **stored** faults.

ET312	PEB INTERLOCK

NOTES	**Special note:** Use the **Wiring Diagrams Technical Note for Twizy**.

ET312: CLOSED
The orange connector for the wiring harness connecting the **traction battery** (component code **938**) to the **inverter** (component code **1063**) is correctly connected on the **traction battery** side (component code **938**).
ET312: OPEN
The connector on the **traction battery** (component code **938**) of the wiring harness connecting the **traction battery** (component code **938**) to the **inverter** (component code **1063**) is not connected properly or is disconnected. If this status is not required, follow the procedure below.
Switch off the ignition. Disconnect and check the condition of the connector on the **traction battery** (component code **938**). of the wiring harness connecting the **traction battery** (component code **938**) to the **inverter** (component code **1063**). Reconnect the connector for the wiring harness connecting the **traction battery** (component code **938**) to the **inverter** (component code **1063**) on the **traction battery** side (component code **938**). Switch on the ignition and check status **ET312.** If the status still open, repeat this operation several times If the fault is still present, repair the connector, otherwise replace the wiring (see **Technical Note 6015A (Renault), Repairing electrical wiring, Wiring: Precautions for repair**).
If the fault is still present, contact the techline.

AFTER REPAIR	Carry out another fault finding check on the system. Deal with any other faults. Clear the **stored** faults.

TDB_V04_ET312

ET313	BRAKE PEDAL

NOTES	There must be no **present** or **stored** faults. The status must be "Released"
	Special note: Use the **Wiring Diagrams Technical Note for Twizy**.

ET313: DEPRESSED with the ignition on.
Check the condition of fuse **F06 (15 A) of the passenger compartment fuse and relay box**, component code **1016**. Replace the fuse if it is defective.
Switch on the + after ignition, press the pedal of brake and check the status of the **brake switch**, component code **160 ET313: BRAKE PEDAL**
Check the connection and condition of the **brake light switch** connector, component code **160**. If the connector is faulty and if there is a repair procedure (see **Technical Note 6015A (Renault), Repairing electrical wiring, Wiring: Precautions for repair**), repair the connector, otherwise replace the wiring.
Check the connection and condition of the **passenger compartment fuse and relay box** connector, component code **1016**. If the connector is faulty and if there is a repair procedure (see **Technical Note 6015A (Renault), Repairing electrical wiring, Wiring: Precautions for repair**), repair the connector, otherwise replace the wiring.

AFTER REPAIR	Carry out another fault finding check on the system. Deal with any other faults. Clear the **stored** faults.

TDB_V04_ET313

ET313 CONTINUED 1	

Check the connection and condition of the **boot lid left-hand light** connector, component code **1285**. If the connector is faulty and if there is a repair procedure (see **Technical Note 6015A (Renault), Repairing electrical wiring, Wiring: Precautions for repair**), repair the connector, otherwise replace the wiring.
Check the connection and condition of the **inverter** connector, component code **1063**. If the connector is faulty and if there is a repair procedure (see **Technical Note 6015A (Renault), Repairing electrical wiring, Wiring: Precautions for repair**), repair the connector, otherwise replace the wiring.
Disconnect the connector of the **brake light switch**, component code **160**, depress the brake pedal and check the **continuity** and **insulation** of the **brake light switch**, component code **160** between: • Track 1 and Track 2 • Track 3 and Track 4 If the connection is faulty, replace the **brake light switch**, component code **160**.
Switch on the + after ignition, depress the brake pedal and check that the voltage is **12 V** on the brake light side, component code **1285** on connection **65A**: If the value does not correspond to the expected value, check **the continuity** and **insulation** of the following connection: • **65A** between components **160** and **1285** • **MAM** between components **160** and **MAM** If the connection is faulty and if there is a repair procedure (see **Renault Technical Note 6015A, Repairing electrical wiring, Wiring: Precautions for repair**), repair the wiring, otherwise replace the wiring.

AFTER REPAIR	Carry out another fault finding check on the system. Deal with any other faults. Clear the **stored** faults.

ET313 CONTINUED 2	

Switch on the **+ after ignition**, depress the brake pedal and check the voltage of the **brake light switch**, component code **160** on connection **AP2**:
If the value does not correspond to the expected value, check **the continuity** and **insulation** of the following connection:

- **AP2** between components **160** and **1016**
- **MAM** between components **160** and **MAM**

If the connection is faulty and if there is a repair procedure (see **Renault Technical Note 6015A, Repairing electrical wiring, Wiring: Precautions for repair**), repair the wiring, otherwise replace the wiring.

If the fault is still present, contact the Techline.

AFTER REPAIR	Carry out another fault finding check on the system. Deal with any other faults. Clear the **stored** faults.

ET314	INVERTER

NOTES	There must be no **present** or **stored** faults. The status may be "Twizy 45" or "Twizy 75" depending on the version of the vehicle used

AFTER REPAIR	Carry out another fault finding check on the system. Deal with any other faults. Clear the **stored** faults.

ET316	+ START FEED

NOTES	There must be no **present** or **stored** faults. Ignition key in the + START position The status must be "ACTIVE"
	Special note: Use the **Wiring Diagrams Technical Note for Twizy**.

ET316: "INACTIVE" with the ignition key in the + START position.
Check the condition of fuse **F21 (5 A) of the passenger compartment fuse and relay box**, component code **1016**. Replace the fuse if it is defective.
Check the connection and condition of the **inverter** connector, component code **1063**. If the connector is faulty and if there is a repair procedure (see **Technical Note 6015A (Renault), Repairing electrical wiring, Wiring: Precautions for repair**), repair the connector, otherwise replace the wiring.
Check the connection and condition of the **passenger compartment fuse and relay box** connector, component code **1016**. If the connector is faulty and if there is a repair procedure (see **Technical Note 6015A (Renault), Repairing electrical wiring, Wiring: Precautions for repair**), repair the connector, otherwise replace the wiring.

AFTER REPAIR	Carry out another fault finding check on the system. Deal with any other faults. Clear the **stored** faults.

TDB_V04_ET316

ET316 CONTINUED	

Switch on the + after ignition and check the voltage (12 V) on connection **D** of the **inverter**, component code **1063.** If the value does not correspond to the expected value, check **the continuity** and **insulation** of the following connection: • **D** between components **1063** and **1016**. If the connection is faulty and if there is a repair procedure (see **Renault Technical Note 6015A, Repairing electrical wiring, Wiring: Precautions for repair**), repair the wiring, otherwise replace the wiring.
Check the earth strap between the **inverter**, component code **1063** and the vehicle chassis**.** If the value is correct, contact Techline before replacing the inverter, component code **1063**. If the connection is faulty and if there is a repair procedure (see **Renault Technical Note 6015A, Repairing electrical wiring, Wiring: Precautions for repair**), repair the wiring, otherwise replace the wiring.
Switch on the + after ignition and check the voltage on connection **D** of the **Passenger Compartment Fuse and Relay Box**, component code **1016.** If the value does not correspond to the expected value, check **the continuity** and **insulation** of the following connection: • **D** between components **104** and **1016**. If the connection is faulty and if there is a repair procedure (see **Renault Technical Note 6015A, Repairing electrical wiring, Wiring: Precautions for repair**), repair the wiring, otherwise replace the wiring.
If the fault is still present, contact the techline.

AFTER REPAIR	Carry out another fault finding check on the system. Deal with any other faults. Clear the **stored** faults.

ET318	CHARGER POWER RELAY

NOTES	There must be no **present** or **stored** faults.
	Special note: Use the **Wiring Diagrams Technical Note for Twizy**.

ET318: AUTHORISED

The relay CP2 (closed) authorises battery recharging. To ensure that the status is **AUTHORISED**, the charger must always be connected in addition to one of the following conditions:
With the ignition off
With the ignition on, no action on the accelerator pedal and the shift pattern control in position N
+ START, no action on the accelerator pedal and shift pattern control in position N

ET318: PROHIBITED

The status is PROHIBITED if the above conditions are not met.
If the conditions are met and the status is PROHIBITED, follow the procedure below.

If the fault is present, deal with this fault first.

Check the connection and condition of the connector of the **traction battery**, component code **938.**
If the connector is faulty and if there is a repair procedure (see **Technical Note 6015A (Renault), Repairing electrical wiring, Wiring: Precautions for repair**), repair the connector, otherwise replace the wiring.

AFTER REPAIR	Carry out another fault finding check on the system. Deal with any other faults. Clear the **stored** faults.

TDB_V04_ET318

ET318 CONTINUED	

Check the connection and condition of the connector for the **charger/converter**, component code **2093**. If the connector is faulty and if there is a repair procedure (see **Technical Note 6015A (Renault), Repairing electrical wiring, Wiring: Precautions for repair**), repair the connector, otherwise replace the wiring.
Check the **continuity** and the **insulation** of the following connections: • **2AE** between components **2093** and **938.** • **2AC** between components **2093** and **938**. • **2H** between components **2093** and **938**. • **3MW** between components **2093** and **938.** If the connection is faulty and if there is a repair procedure (see **Renault Technical Note 6015A, Repairing electrical wiring, Wiring: Precautions for repair**), repair the wiring, otherwise replace the wiring.
If the fault is still present, contact the techline.

AFTER REPAIR	Carry out another fault finding check on the system. Deal with any other faults. Clear the **stored** faults.

ET319	220 V SOCKET

NOTES	**Special note:** Use the **Wiring Diagrams Technical Note for Twizy**.

ET319: PRESENT
The vehicle is connected to the 220 V domestic mains power supply. Note: this does not mean that the vehicle is charging.
ET319: ABSENT
The vehicle is not connected to the 220 V domestic mains power supply. Check the connection of the vehicle 220 V connection to the domestic mains power supply. If the connection is not correct, connect it properly and check status **ET319** again.
Check the 220 V domestic mains power supply socket using a component that operates using this supply. If it is not possible to carry out the check, change the power socket for a socket where a 220 V supply is guaranteed.
Check the condition of the blue spiral charging lead and connection. If a fault is found, repair the connection or faulty lead, otherwise replace the assembly.
Contact the Techline.

AFTER REPAIR	Carry out another fault finding check on the system. Deal with any other faults. Clear the **stored** faults.

ET320	TRACTION BATTERY CHARGING

NOTES	**Special note:** Use the **Wiring Diagrams Technical Note for Twizy**.

ET320: IN PROGRESS	
Traction battery charging (component code 938) is in progress	
ET320: COMPLETE	
Traction battery charging (component code **938**) is complete	
ET320: NO	
The battery is not charging. Check status **ET319** If the status is **ABSENT,** refer to status **ET319: 220 V CONNECTION** in the **Fault finding – Interpretation of statuses section**	

AFTER REPAIR	Carry out another fault finding check on the system. Deal with any other faults. Clear the **stored** faults.

TDB_V04_ET320

ET320 CONTINUED	

Check that at least one of the conditions required to recharge the **traction battery** (component code **938**) is met and has not changed during recharging • Charger connected and ignition off or • Charger connected, ignition on, no action on the accelerator pedal and shift pattern control in position N or • Charger connected, + START, no action on the accelerator pedal and shift pattern control in position N or • Charger connected, ignition on with vehicle speed below 4 mph (6 km/h) If the **traction battery** (component code **938**) recharging process was interrupted, start recharging the battery again and check that status **ET320** is **IN PROGRESS**
Check status **ET302** If the status is **PROHIBITED,** refer to status **ET302 Traction relay prohibited closure** in the **Fault finding – Interpretation of statuses section**
Contact the Techline.

AFTER REPAIR	Carry out another fault finding check on the system. Deal with any other faults. Clear the **stored** faults.

ET322	AUTHORISATION TO START

NOTES	**Special note:** Use the **Wiring Diagrams Technical Note for Twizy**.

ET322: AUTHORISED
The vehicle conditions are met for starting.
ET322: PROHIBITED
The vehicle conditions are not met for starting. Check that the blue spiral charging lead is not connected to the domestic mains power supply. If the lead is connected to the mains supply, disconnect it and check status **ET322** again.
Starting the vehicle using the documentation MR-456-X09-87B000 UCH, section 4.8 – Fault finding – Status summary table; use TEST STATUSES to check the status of the function. If the immobiliser function is active, use the documentation MR-456-X09-87B000 UCH to deactivate the immobiliser.
Check status **ET302** If the status is **PROHIBITED,** refer to status **ET302 Traction relay prohibited closure** in the **Fault finding – Interpretation of statuses section**
Contact the Techline.

AFTER REPAIR	Carry out another fault finding check on the system. Deal with any other faults. Clear the **stored** faults.

TDB_V04_ET322

ET323	INVERTER SUPPLY RELAY

NOTES	**Special note:** Use the **Wiring Diagrams Technical Note for Twizy**.

ET323: CLOSED
The inverter supply relay is used to activate the inverter The RP relay is closed under the following conditions: • Charge completed • Ignition on • In traction mode
ET323: OPEN
The RP relay is open when traction is not needed. If in the conditions required to be in the **CLOSED** status, the status is shown as **OPEN,** follow the procedure below.
Check the connection and condition of the connector of the **traction battery**, component code **938.** If the connector is faulty and if there is a repair procedure (see **Technical Note 6015A (Renault), Repairing electrical wiring, Wiring: Precautions for repair**), repair the connector, otherwise replace the wiring.
Check the connection and condition of the **inverter** connector, component code **1063**. If the connector is faulty and if there is a repair procedure (see **Technical Note 6015A (Renault), Repairing electrical wiring, Wiring: Precautions for repair**), repair the connector, otherwise replace the wiring.

AFTER REPAIR	Carry out another fault finding check on the system. Deal with any other faults. Clear the **stored** faults.

TDB_V04_ET323

ET323 CONTINUED	

Check the condition of fuse **F22 (10A),** if the fuse is faulty, replace it. Check the **continuity** and **insulation to earth** of the following connection: • **BPR1** between components **1063** and **938**. If the connection is faulty and if there is a repair procedure (see **Renault Technical Note 6015A, Repairing electrical wiring, Wiring: Precautions for repair**), repair the wiring, otherwise replace the wiring.	
Contact the Techline.	
ET323: OPEN	
Contact the Techline.	

AFTER REPAIR	Carry out another fault finding check on the system. Deal with any other faults. Clear the **stored** faults.

ET325	LBC STATUS SEEN BY THE BCB

NOTES	**Special note:** Use the **Wiring Diagrams Technical Note for Twizy**.

ET325: SLOW CHARGING
The status confirms the status of the traction battery via the multiplex network. If the status is other than status ET305 TRACTION BATTERY, deal first with the multiplex network faults (XX MULTIPLEX TRANSMISSION ABSENT) If the fault is still present, contact Techline.
ET325: NORMAL
The status confirms the status of the traction battery via the multiplex network. If the status is other than status ET305 TRACTION BATTERY, deal first with the multiplex network faults (XX MULTIPLEX TRANSMISSION ABSENT)
If the fault is still present, contact the techline.

AFTER REPAIR	Carry out another fault finding check on the system. Deal with any other faults. Clear the **stored** faults.

ET326	AFTER IGNITION SEEN BY BCB

NOTES	**Special note:** Use the **Wiring Diagrams Technical Note for Twizy**.

ET326: ABSENT
The ignition is not on or the charger/converter (component code 2093) has not detected that the ignition is on, in this case follow the procedure below.
Check the operation of the radio and wipers. If they do not operate, check the continuity and insulation of the following connection: • **A** between components **104** and **1016**. If connection **A** between components **104** and **1016** is correct, look further upstream of the connection **A** to find the fault.
Check the condition of fuse **F13 (5 A)** of the **passenger compartment fuse and relay box**, component code **1016**. Replace the fuse if it is defective.
Check the connection and condition of the **passenger compartment fuse and relay box** connector, component code **1016**. If the connector is faulty and if there is a repair procedure (see **Technical Note 6015A (Renault), Repairing electrical wiring, Wiring: Precautions for repair**), repair the connector, otherwise replace the wiring.

AFTER REPAIR	Carry out another fault finding check on the system. Deal with any other faults. Clear the **stored** faults.

TDB_V04_ET326

ET326 CONTINUED	

Check the connection and condition of the **inverter** connector, component code **1063**. If the connector is faulty and if there is a repair procedure (see **Technical Note 6015A (Renault), Repairing electrical wiring, Wiring: Precautions for repair**), repair the connector, otherwise replace the wiring.
Check **the continuity** of the following connection: **AP15** between **1016** and **2093** If the connection is faulty and if there is a repair procedure (see **Renault Technical Note 6015A, Repairing electrical wiring, Wiring: Precautions for repair**), repair the wiring, otherwise replace the wiring.
Switch off the ignition. Connect a 21 W test light between connection **AP15** of component **2093** (**wiring harness side)** and a **chassis earth.** Switch on the ignition. If the bulb illuminates, contact Techline before replacing the **charger/converter** (component code **2093**)
Contact Techline before replacing the **passenger compartment fuse box**, component **1016**

ET326: PRESENT	

The charger/converter (component code 2093) has observed that the + after ignition feed has been switched on

AFTER REPAIR	Carry out another fault finding check on the system. Deal with any other faults. Clear the **stored** faults.

ET331	COMPUTER INTERNAL TEMPERATURE

NOTES	**Special note:** Use the **Wiring Diagrams Technical Note for Twizy**.

ET331: CORRECT
The internal temperature of the **charger/converter** (component code **2093**) is less than 77°C.
ET331: FAULT
The internal temperature of the **charger/converter** (component code **2093**) is greater than 77°C. If extended charging has just been performed, leave the battery charger to cool for 30 minutes. Check status **ET331 again: COMPUTER INTERNAL TEMPERATURE.** If the status is still **FAULT,** replace the **battery charger (2093)**
If the fault is still present, contact the techline.

AFTER REPAIR	Carry out another fault finding check on the system. Deal with any other faults. Clear the **stored** faults.

PARAMETER	
PR083	CUMULATIVE POWER CHARGE
PR160	TRACTION BATTERY CHARGE
PR076	TRACTION BATTERY TRAY TEMPERATURE
PR086	LOWEST CELL VOLTAGE LEVEL
PR084	HIGHEST CELL VOLTAGE LEVEL
PR085	BATTERY HEALTH STATUS
PR078	HIGH VOLTAGE BATTERY TRAY MAX. TEMPERATURE
PR087	POWER MEASURED BY THE LBC
PR088	RECUPERATIVE BRAKING POWER
PR089	POWER MEASURED BY THE LBC
PR145	CURRENT MEASURED BY LBC
PR090	TRACTION BATTERY TOTAL KM / MILEAGE
PR155	TRACTION BATTERY VOLTAGE MEASUREMENT
PR135	INVERTER SUPPLY
PR146	ACCELERATOR PEDAL POSITION
PR144	INVERTER INSTANT POWER
PR116	ENGINE SPEED
PR152	ELECTRIC MOTOR TEMPERATURE
PR148	COMPUTER SUPPLY VOLTAGE
PR149	DCDC REGULATION VOLTAGE
PR161	MAX AUTHORISED POWER WHEN CHARGING
PR162	COMPUTER INTERNAL TEMPERATURE
PR009	MILEOMETER

PR009	MILEOMETER

NOTES	No faults should be present or stored.

The recorded distance can be between 0 and 119,999 miles (0 and 199,999 kms).

AFTER REPAIR	Carry out another fault finding check on the system. Deal with any other faults. Clear the **stored** faults.

TDB_V04_PR009

PR047	CUMULATIVE POWER CHARGE

NOTES	This parameter can be found the LBC session There must be no present or stored faults

The power in kWh should increase during the charge mode.

AFTER REPAIR	Carry out another fault finding check on the system. Deal with any other faults. Clear the **stored** faults.

TDB_V04_PR047

PR149	HIGHEST CELL VOLTAGE LEVEL

NOTES	This parameter can be found the LBC session There must be no present or stored faults

The maximum voltage of a traction battery cell is 4.3 V. Above this, the traction battery triggers a fault.

AFTER REPAIR	Carry out another fault finding check on the system. Deal with any other faults. Clear the **stored** faults.

TDB_V04_PR149

PR085	BATTERY HEALTH STATUS

NOTES	There must be no present or stored faults

The health status of the traction battery is assessed as a percentage. Below 75%, the traction battery must be replaced.

AFTER REPAIR	Carry out another fault finding check on the system. Deal with any other faults. Clear the **stored** faults.

TDB_V04_PR085

PR150	LOWEST CELL VOLTAGE LEVEL

NOTES	There must be no present or stored faults

The minimum voltage of a cell for the correct operation of the traction battery is 3 V. Voltages lower than this trigger a fault.

AFTER REPAIR	Carry out another fault finding check on the system. Deal with any other faults. Clear the **stored** faults.

TDB_V04_PR150

PR087	POWER MEASURED BY THE LBC

NOTES	There must be no present or stored faults

The battery power should be between 0 and 6.47 kW.

AFTER REPAIR	Carry out another fault finding check on the system. Deal with any other faults. Clear the **stored** faults.

TDB_V04_PR087

PR151	RECUPERATIVE BRAKING POWER

NOTES	This parameter can be found the LBC session There must be no present or stored faults

The recuperated braking power is 2.1 kW.

AFTER REPAIR	Carry out another fault finding check on the system. Deal with any other faults. Clear the **stored** faults.

TDB_V04_PR151

PR152	AUTHORISED POWER IN TRACTION MODE

NOTES	This parameter can be found the LBC session There must be no present or stored faults

The power measured by the LBC can reach 20 kW.

AFTER REPAIR	Carry out another fault finding check on the system. Deal with any other faults. Clear the **stored** faults.

TDB_V04_PR152

PR090	TRACTION BATTERY TOTAL KM / MILEAGE

NOTES	There must be no present or stored faults

The total distance of the traction battery varies between 0 and 393,210 miles (0 and 655350 kms).

AFTER REPAIR	Carry out another fault finding check on the system. Deal with any other faults. Clear the **stored** faults.

TDB_V04_PR090

PR116	ENGINE SPEED

NOTES	There must be no present or stored faults

The electric motor speed value recorded can be between -20,000 rpm and 20,000 rpm

AFTER REPAIR	Carry out another fault finding check on the system. Deal with any other faults. Clear the **stored** faults.

TDB_V04_PR116

PR144	INVERTER INSTANT POWER

NOTES	There must be no present or stored faults

The instant inverter power recorded can be between -100% and 100%.

AFTER REPAIR	Carry out another fault finding check on the system. Deal with any other faults. Clear the **stored** faults.

TDB_V04_PR144

PR145	CURRENT MEASURED BY LCB

NOTES	There must be no present or stored faults

The current measured by the LBC varies between -200 Amps and 400 Amps.

AFTER REPAIR	Carry out another fault finding check on the system. Deal with any other faults. Clear the **stored** faults.

PR146	ACCELERATOR PEDAL POSITION

NOTES	There must be no present or stored faults

The accelerator pedal value can be between 0 and 253 depending on the accelerator pedal travel.

AFTER REPAIR	Carry out another fault finding check on the system. Deal with any other faults. Clear the **stored** faults.

TDB_V04_PR146

PR148	COMPUTER SUPPLY VOLTAGE

NOTES	There must be no present or stored faults

The voltage of the **additional battery** (component code **1203**) may be between 9 V and 16 V.
Beyond these values, check for the presence of faults.

AFTER REPAIR	Carry out another fault finding check on the system. Deal with any other faults. Clear the **stored** faults.

TDB_V04_PR148

PR149	DCDC REGULATION VOLTAGE

NOTES	There must be no present or stored faults

The regulation voltage of the **additional battery** (component code **1203**) can be between 12 V and 16 V;

AFTER REPAIR	Carry out another fault finding check on the system. Deal with any other faults. Clear the **stored** faults.

TDB_V04_PR149

PR152	ELECTRIC MOTOR TEMPERATURE

NOTES	There must be no present or stored faults

The temperature of the **traction motor** (component code **262**) recorded can be between -40°C and 214°C

AFTER REPAIR	Carry out another fault finding check on the system. Deal with any other faults. Clear the **stored** faults.

TDB_V04_PR152

PR161	MAX AUTHORISED POWER WHEN CHARGING

NOTES	There must be no present or stored faults

The maximum charging power of the charger (component code **2093**) recorded can be between 0 kW and 2.1 kW.

AFTER REPAIR	Carry out another fault finding check on the system. Deal with any other faults. Clear the **stored** faults.

TDB_V04_PR161

PR155	TRACTION BATTERY VOLTAGE MEASUREMENT

NOTES	There must be no present or stored faults

The voltage measured by the LBC varies between 42 V and 58.8 V. Beyond these values, check for faults.

AFTER REPAIR	Carry out another fault finding check on the system. Deal with any other faults. Clear the **stored** faults.

TDB_V04_PR155

PR160	TRACTION BATTERY CHARGE

NOTES	There must be no present or stored faults

The charge percentage should increase during charging.

AFTER REPAIR	Carry out another fault finding check on the system. Deal with any other faults. Clear the **stored** faults.

TDB_V04_PR160

PR162	COMPUTER INTERNAL TEMPERATURE

NOTES	There must be no present or stored faults

The temperature of the **inverter** (component code **1063**) recorded can be between -40°C and 214°C.

AFTER REPAIR	Carry out another fault finding check on the system. Deal with any other faults. Clear the **stored** faults.

TDB_V04_PR162

Tool command	Diagnostic tool title	Comments
VP002	VIN entry	See interpretation of the command.
VP010	Updating the odometer	See interpretation of the command.
VP012	Enter last After-Sales service date	See interpretation of the command.
RZ001	Fault memory	Use this command to clear the faults stored in the computer.

VP002	ENTERING THE VIN

NOTES	This command enables the vehicle identification number to be entered manually in the computer. Use this command each time the computer is replaced. The vehicle identification number is indicated on the manufacturer's plate on the right-hand side door pillar.

Procedure for writing the VIN
- establish communication with the UCH or instrument panel,
- select the **"repair mode"** menu,
- select the **"Other parameters"** menu,
- select line **VP002**,
- enter the VIN twice,
- exit fault finding mode,
- switch off the ignition,
- wait for the end of **powerlatch**,
- reread the VIN using **ID014 VIN Code** in the **Identification** menu for confirmation.

AFTER REPAIR	Carry out a road test, followed by a check with the **diagnostic tool**.

TDB_V04_VP002

VP010	UPDATING THE ODOMETER

NOTES	This command must be used after the instrument panel has been replaced. Note down the total distance travelled before replacing the instrument panel, then once the new instrument panel has been fitted, run command VP10 and write the displayed km/mileage before replacing the part.

AFTER REPAIR	Carry out a road test, followed by a check with the **diagnostic tool**.

TDB_V04_VP010

RZ001	FAULT MEMORY

NOTES	Use this command to clear the faults stored in the computer.

AFTER REPAIR	Carry out another fault finding check on the system. Deal with any other faults. Clear the **stored** faults.

TDB_V04_RZ001

INSTRUMENT PANEL

Fault finding – Customer complaints

NOTES	**Only refer to the customer complaints after performing a complete check using the diagnostic tool.**

ELECTRIC TRACTION FAULT	
NO TRACTION AT START UP	ALP1
LOSS OF TRACTION WHEN DRIVING	ALP2
LOSS OF POWER	ALP3

TRACTION BATTERY RANGE	
DISCHARGE DURING RESTING PHASE	ALP5
INSUFFICIENT DRIVING RANGE	ALP6

BATTERY CHARGING (AUXILIARY AND TRACTION)	
BATTERY CHARGING CIRCUIT: BATTERY DISCHARGED	ALP7
TRACTION BATTERY RECHARGING: IMPOSSIBLE	ALP8
TRACTION BATTERY RECHARGING: INCOMPLETE	ALP9
TRACTION BATTERY RECHARGING: TAKES TOO LONG	ALP 13
TRACTION BATTERY RECHARGING: NO VISUAL DISPLAY OF VEHICLE ON CHARGE	ALP10
THE CHARGING PLUG IS JAMMED IN THE TERMINAL	ALP16

DRIVER'S POSITION	
R/D SELECTION CONTROL FAULT	ALP4
"SERVICE" WARNING LIGHT ON	ALP11
VSP NOT WORKING	ALP14
"STOP" WARNING LIGHT ON	ALP12
THE BRAKE FLUID FAULT WARNING LIGHT REMAINS ILLUMINATED AFTER REPAIR AND FAULT CLEARING	ALP15

ALP1	No traction at start up

NOTES	
	Only consult this customer complaint after a complete check with the diagnostic tool. There must be no **present** or **stored** faults.
	Special note: Use the **Wiring Diagrams Technical Note for Twizy**

Check for the presence of faults

↓

Are there any faults present? — YES → Deal with the faults

NO ↓

Check the insulation and continuity of the lines of the speed sensor connected to the electric motor; is the check correct? — YES → Replace the speed sensor

NO ↓

If the connection is faulty and if there is a repair procedure (see **Technical Note 6015A (Renault), Repairing electrical wiring, Wiring: Precautions for repair**), repair the wiring, otherwise replace the wiring. — YES → Is the vehicle still faulty? If yes, continue to consult the fault finding chart

NO ↓

Check status ET302 TRACTION RELAY PROHIBITED CLOSURE
Is the status "Prohibited"? — YES → Interpretation of statuses

NO ↓

A

TDB_V04_ALP1

ALP1 CONTINUED 1

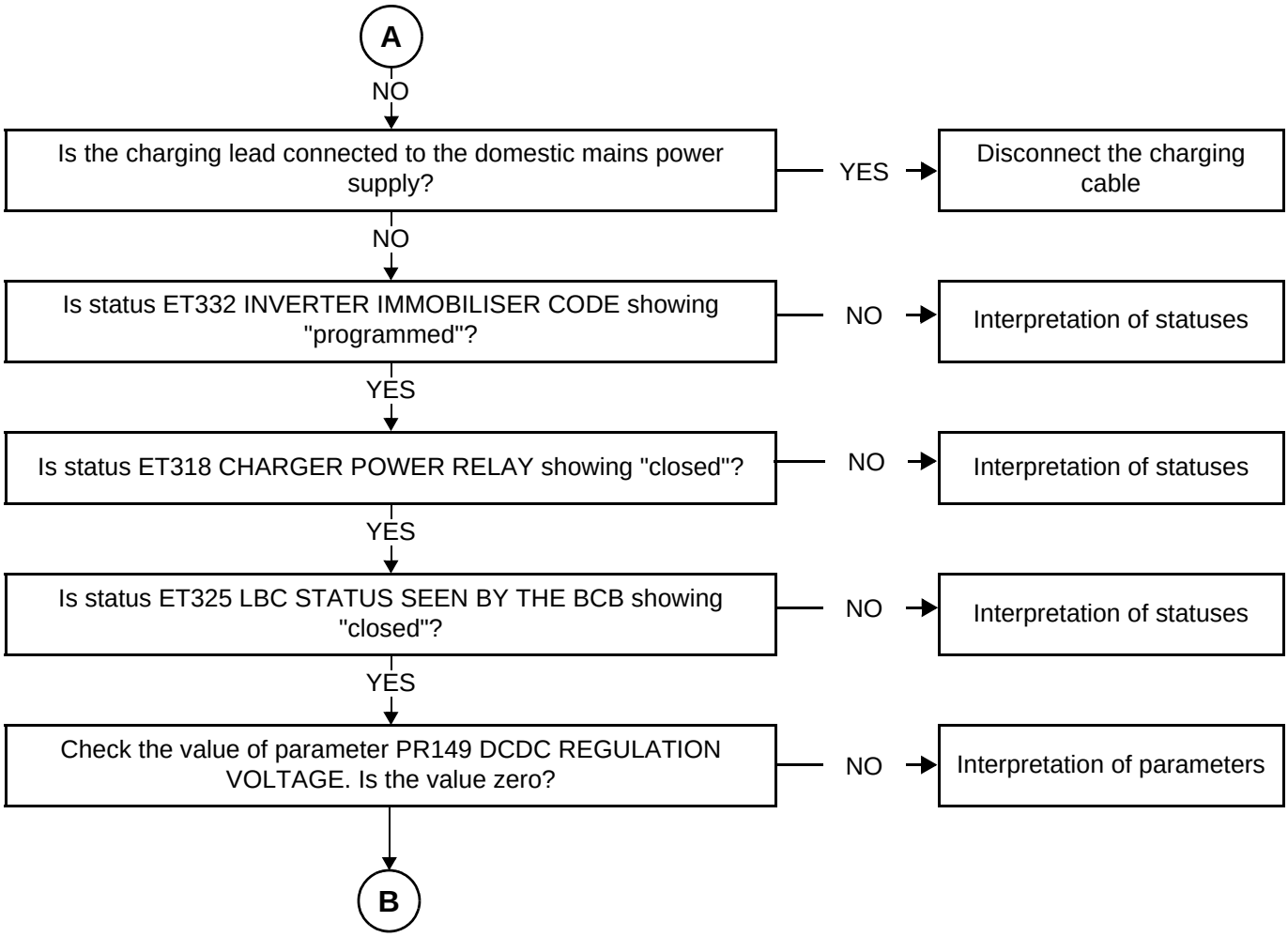

ALP1 CONTINUED 2	

B

NO

Check the instrument panel display: does the speed show 0 mph (0 km/h) or two dashes (--)?

dashes (--)

0 mph (0 km/h)

C

Check for the presence of new faults. If new faults are present:
Check the **connection** and **condition** of the connectors for the inverter, component code **1063**, the traction battery, component code **938** and the charger/converter, component code **2093**.

Check the condition of the orange connector between the charger and the **traction battery**.
Check the condition of the orange connector between the traction battery and the inverter.
If the connectors are faulty and if there is a repair procedure (see **Renault Technical Note 6015A, Repairing electrical wiring, Wiring: Precautions for repair**), repair the connectors, otherwise replace the wiring.

Check the continuity and insulation of the following connection:
- **2AC** between components **2093** and **938**.

Check the continuity and insulation of the following connection:
- **55CF** between components **1063** and **938**.

If the connection is faulty and if there is a repair procedure (see **Technical Note 6015A (Renault), Repairing electrical wiring, Wiring: Precautions for repair**), repair the wiring, otherwise replace the wiring.

ALP1 CONTINUED 3

C

Is status ET312 PEB INTERLOCK showing CLOSED?
- NO → Interpretation of statuses
- YES ↓

Turn the key to the + START position, wait for the beep and for the "GO" warning light to illuminate. Does status ET316 + START change to ACTIVE?
- NO → Interpretation of statuses
- YES ↓

Select a driving mode using the control button. Does the indicator light illuminate and is status ET131 POSITION D INDICATOR LIGHT showing ON?
- NO → Interpretation of statuses
- YES ↓

Depress the brake pedal, release the handbrake and gently depress the accelerator pedal. Does the vehicle start?
- NO → Check for the presence and correct positioning of the accelerator pedal potentiometer. Consult the interpretation of faults DF163, DF483, DF484, DF164, DF486 and DF487.
  - ↓ If traction is still not possible, contact Techline.

ALP2	Loss of traction when driving

NOTES	
	Only consult this customer complaint after a complete check with the diagnostic tool. There must be no **present** or **stored** faults.
	Special note: Use the **Wiring Diagrams Technical Note for Twizy**

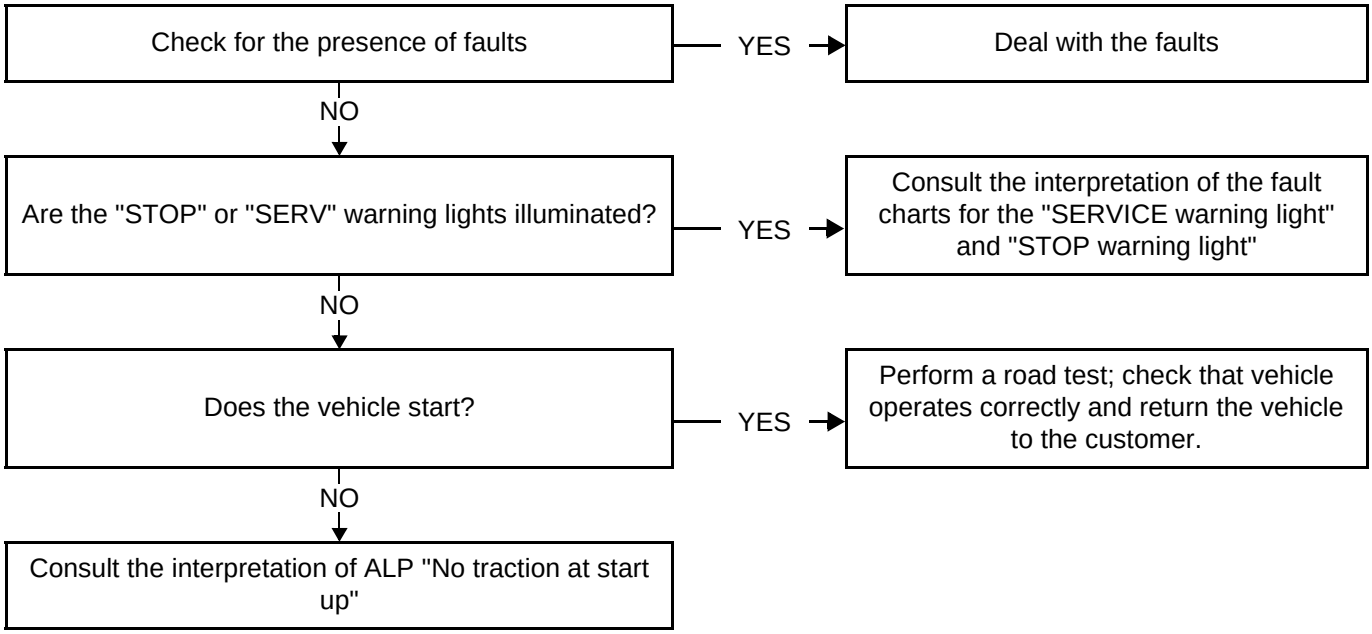

TDB_V04_ALP2

ALP3	Loss of power

NOTES	
	Only consult this customer complaint after a complete check with the diagnostic tool. There must be no **present** or **stored** faults.
	Special note: Use the **Wiring Diagrams Technical Note for Twizy**

Check for the presence of faults

↓

Does the warning light for over temperature illuminate?

YES → Consult the interpretation of faults DF113, 372, 373 "Traction battery tray temperature" and DF121, DF214 "Temperature sensor circuit"

NO ↓

Is parameter "PR152 ELECTRIC MOTOR TEMPERATURE" greater than 150°C?

YES → Check the temperature sensor.

NO ↓

Is parameter "PR162 COMPUTER INTERNAL TEMPERATURE" greater than 75°C?

YES → Allow the temperature to drop and then check the reading of this parameter again. If the fault is still present, contact Techline.

NO ↓

If the fault is still present, contact the techline.

TDB_V04_ALP3

ALP8	Traction battery recharging: impossible

NOTES	
	Only consult this customer complaint after a complete check with the diagnostic tool. There must be no **present** or **stored** faults.
	Special note: Use the **Wiring Diagrams Technical Note for Twizy**

Check for the presence of fault codes

↓

Are there any fault codes present? — YES → Record the fault codes. Deal with the fault codes *in order of priority*.

NO ↓

Check that the charging lead is not connected to the domestic mains supply

NO ↓

Is the lead connected to the domestic mains power supply? — YES → Disconnect the charging cable. Try to start the vehicle again.

NO ↓

Use the CLIP tool to check status ET332: INVERTER IMMOBILISER CODE

NO ↓

A

TDB_V04_ALP8

ALP8 CONTINUED 1

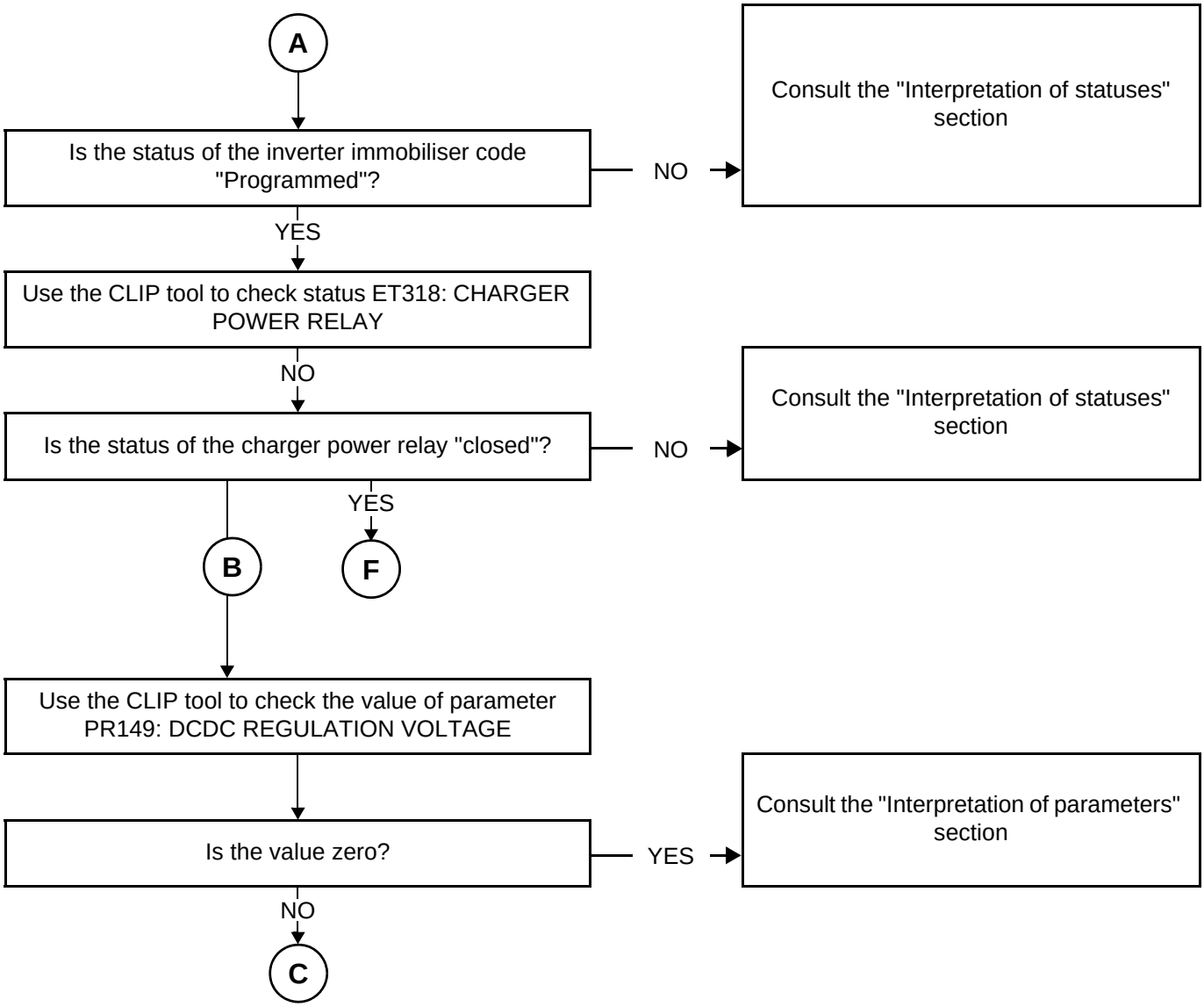

ALP8 CONTINUED 2

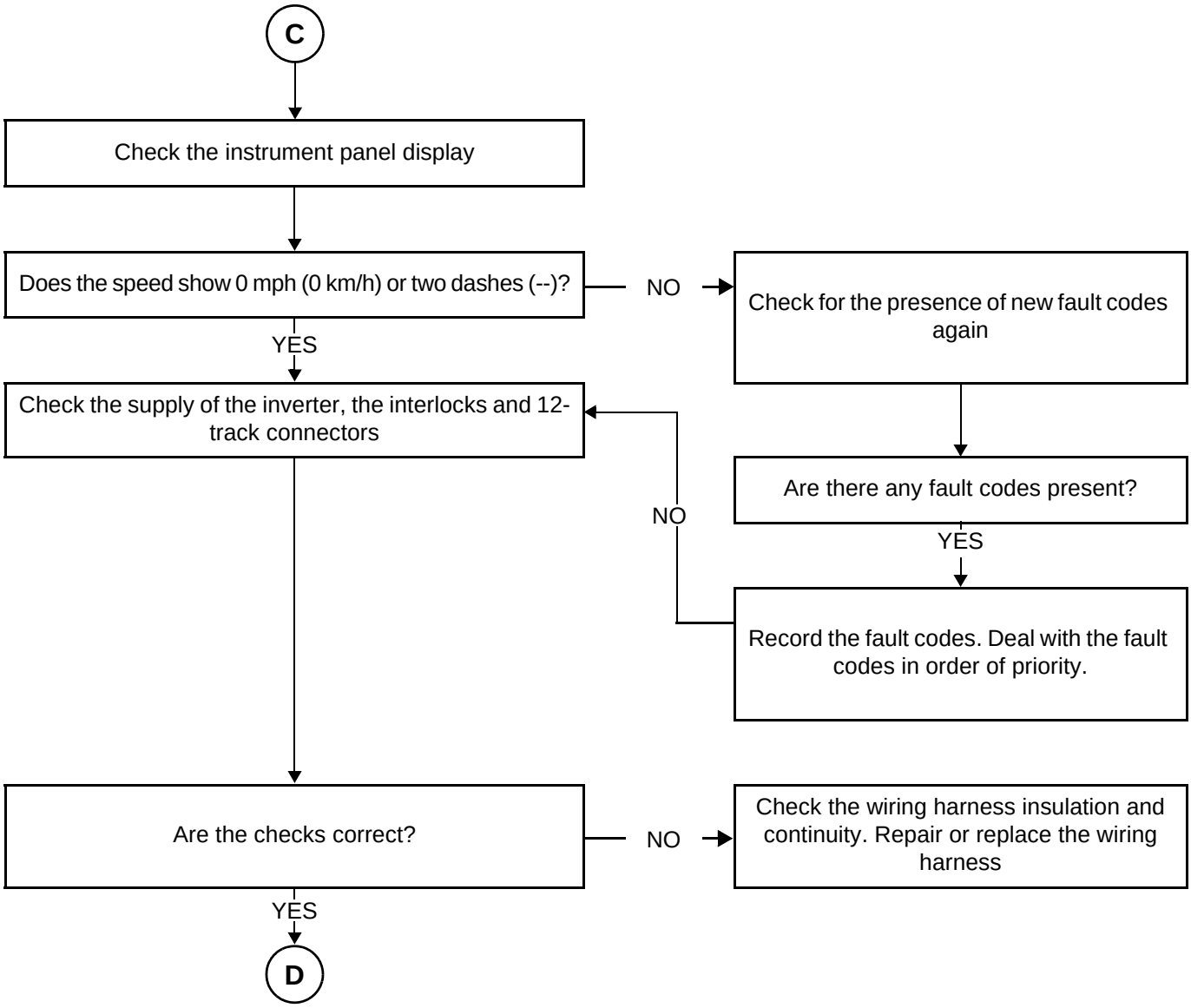

ALP8 CONTINUED 3

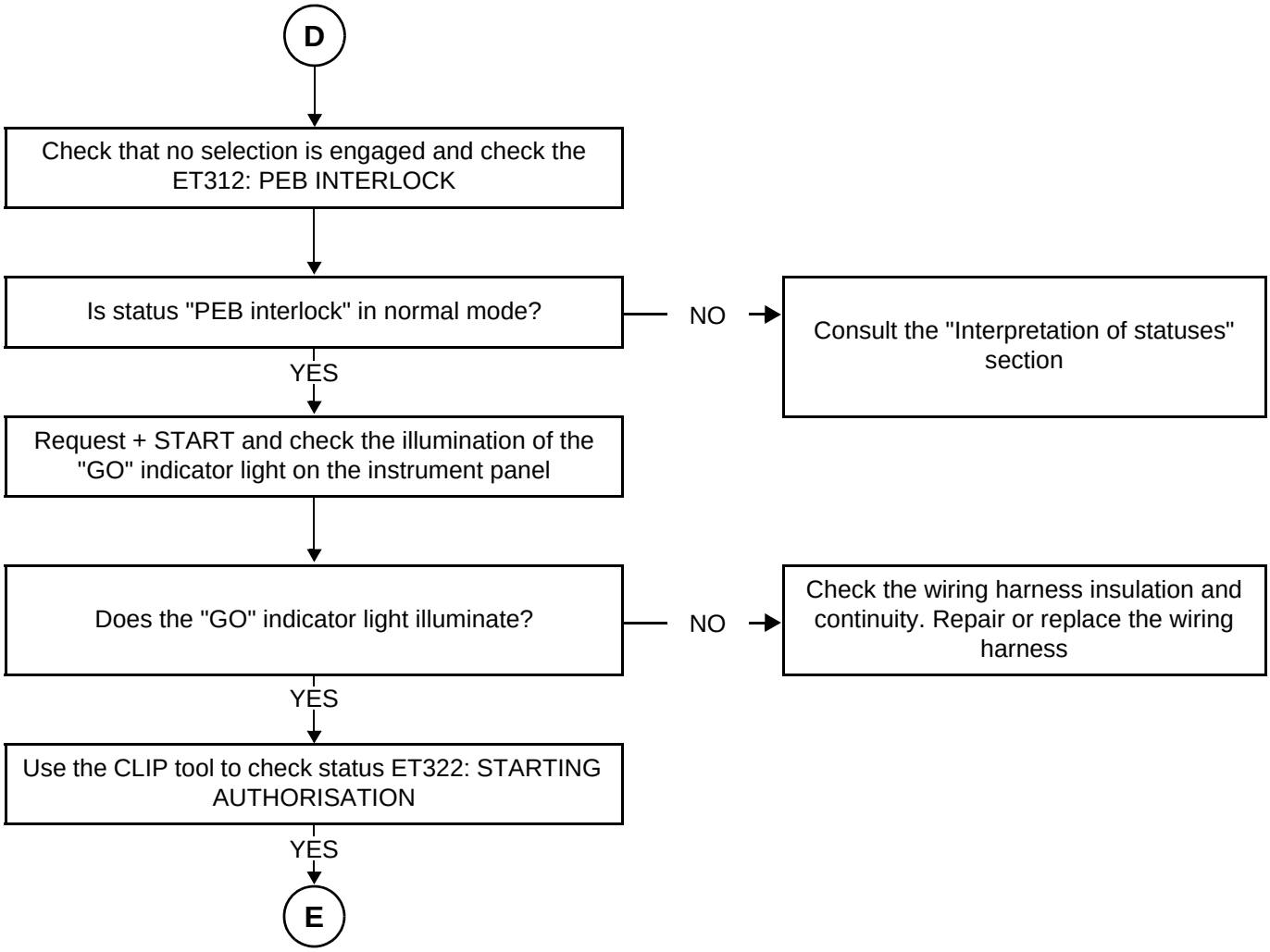

ALP8 CONTINUED 4	

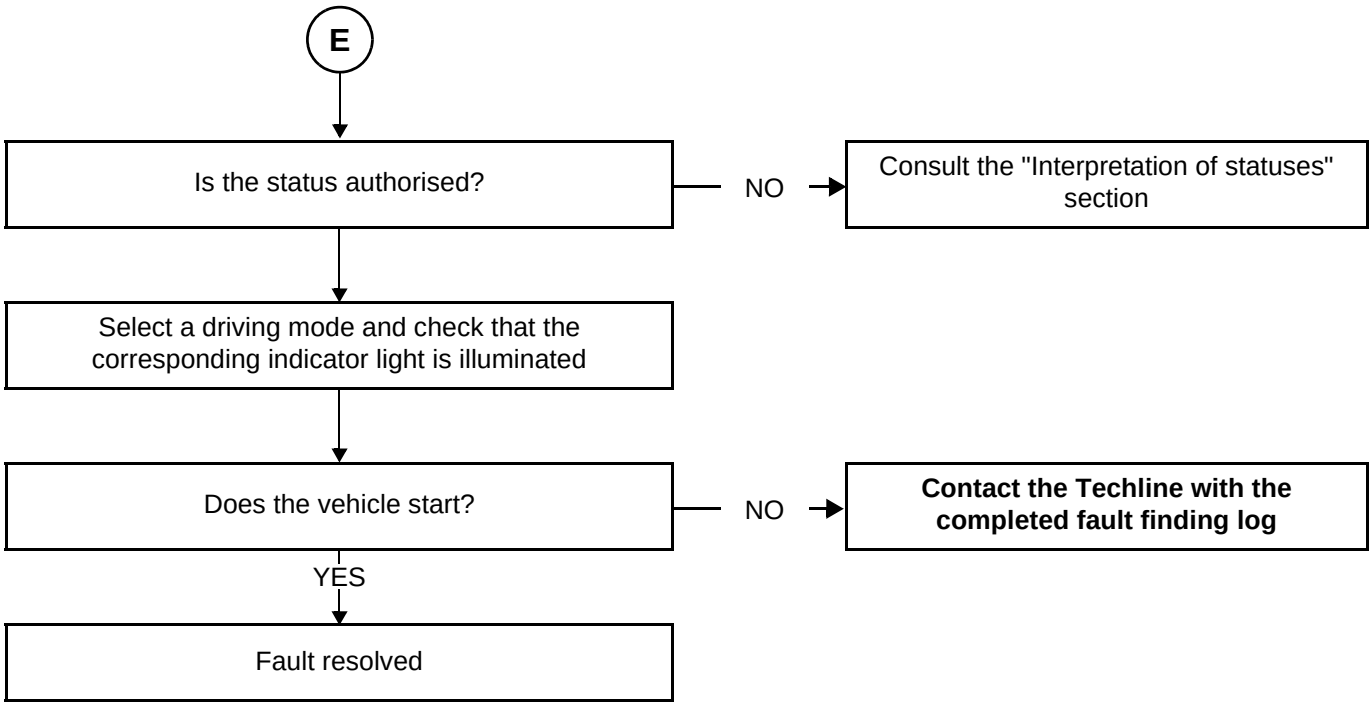

ALP8 CONTINUED 5	

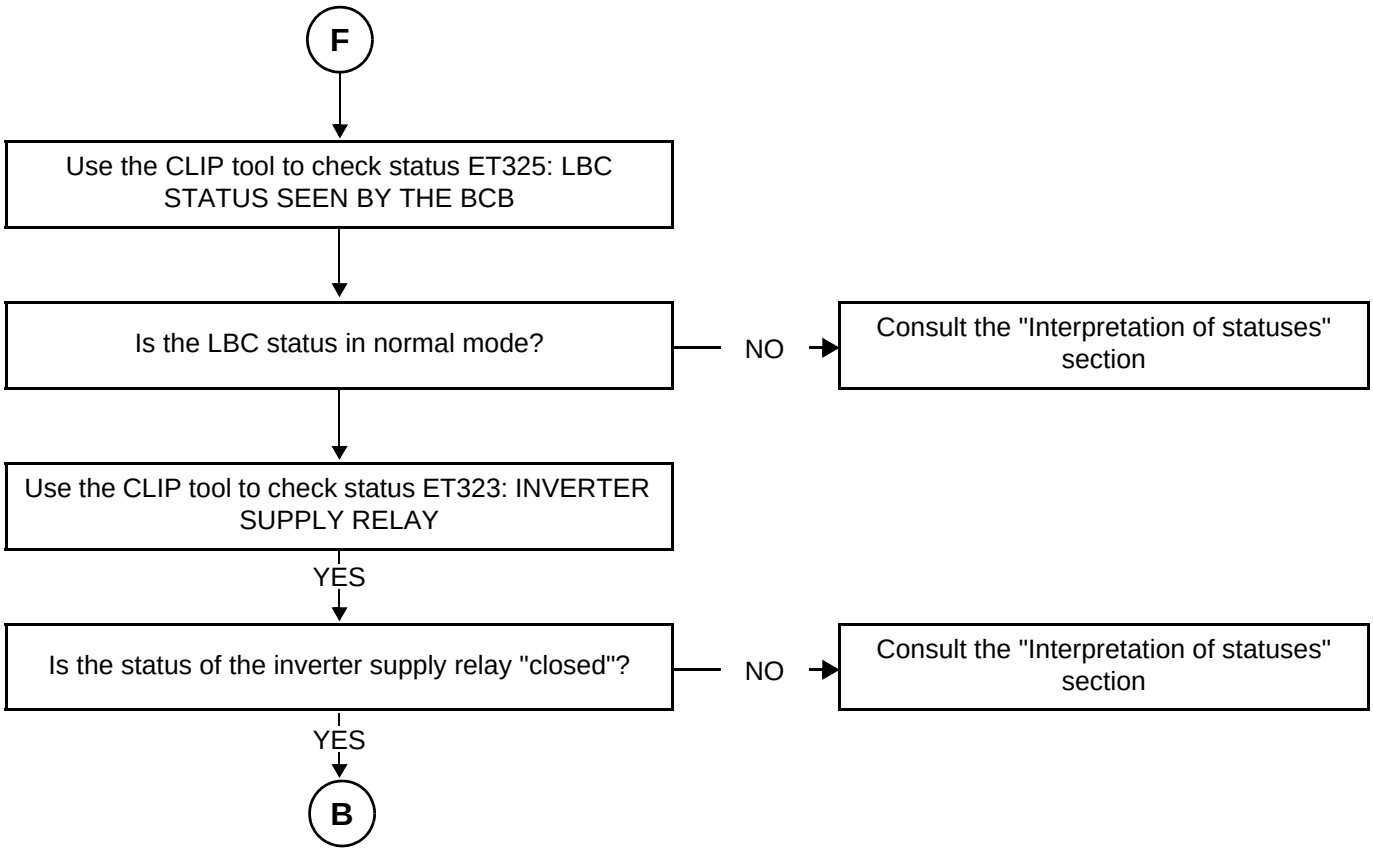

ALP7	Battery charging circuit: battery discharged

NOTES	
	Only consult this customer complaint after a complete check with the diagnostic tool. There must be no **present** or **stored** faults.
	Special note: Use the **Wiring Diagrams Technical Note for Twizy**

Check for the presence of faults

↓

Are there any faults present?

YES → Deal with the faults

NO ↓

Ask the customer if he has discharged the auxiliary battery himself: forgotten to switch off the lights or other power consumer or any external devices connected to the accessories socket? From the point at which the charger has no fault, it will recharge the auxiliary battery if the vehicle is in traction or charging via its DCDC function.

Perform fault finding on the charger.
If the fault is still present, contact Techline.

End of fault finding

TDB_V04_ALP7

ALP9	Traction battery recharging: incomplete

NOTES	
	Only consult this customer complaint after a complete check with the diagnostic tool. There must be no **present** or **stored** faults.
	Special note: Use the **Wiring Diagrams Technical Note for Twizy**

Check for the presence of faults

↓

Are there any faults present? — YES → Deal with the faults

NO ↓

Carry out a continuity and insulation check on the charging lead. Is the lead faulty? — YES → Replace the charging lead

NO ↓

Connect the charging lead and check status ET305 TRACTION BATTERY; is it "SLOW CHARGING"? — YES → The vehicle must be charged completely

NO ↓

Consult ALP "Charging impossible"

TDB_V04_ALP9

ALP10	Traction battery recharging: no visual display of vehicle on charge

NOTES	
	Only consult this customer complaint after a complete check with the diagnostic tool. There must be no **present** or **stored** faults.
	Special note: Use the **Wiring Diagrams Technical Note for Twizy**

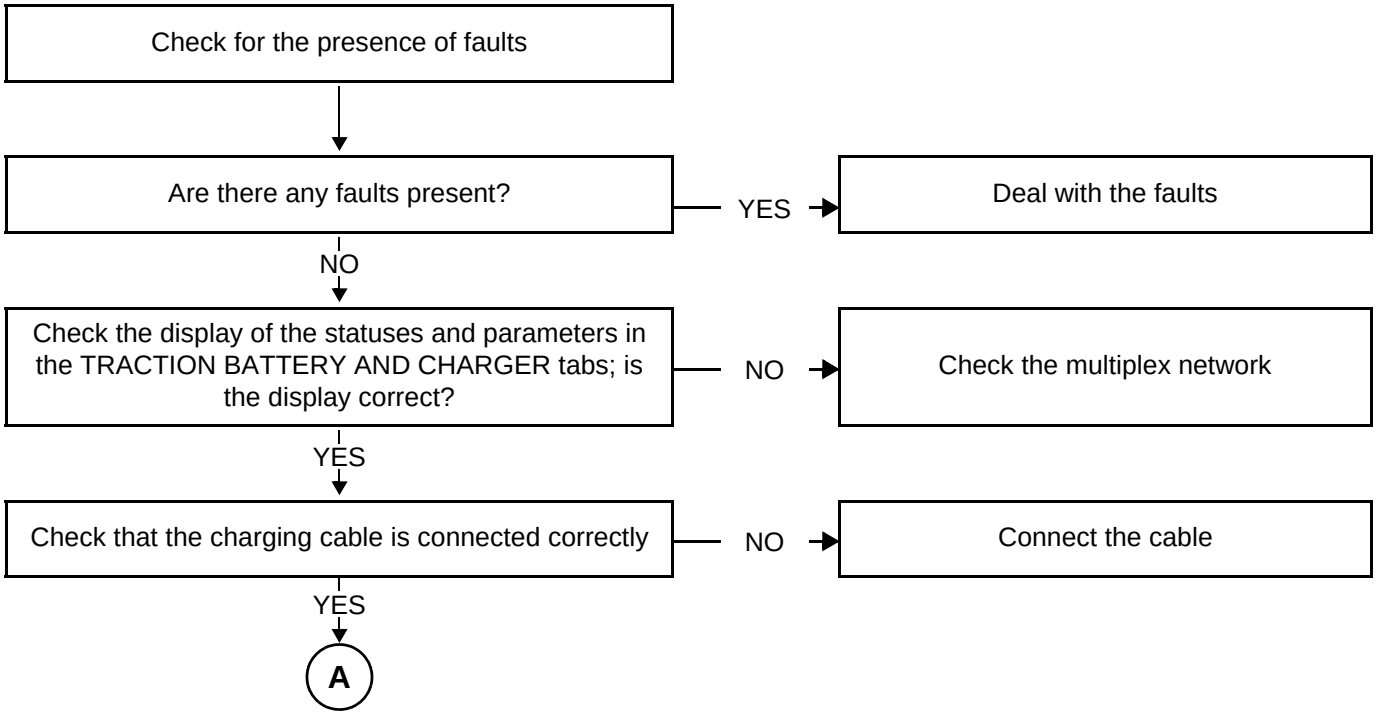

TDB_V04_ALP10

ALP10 CONTINUED	

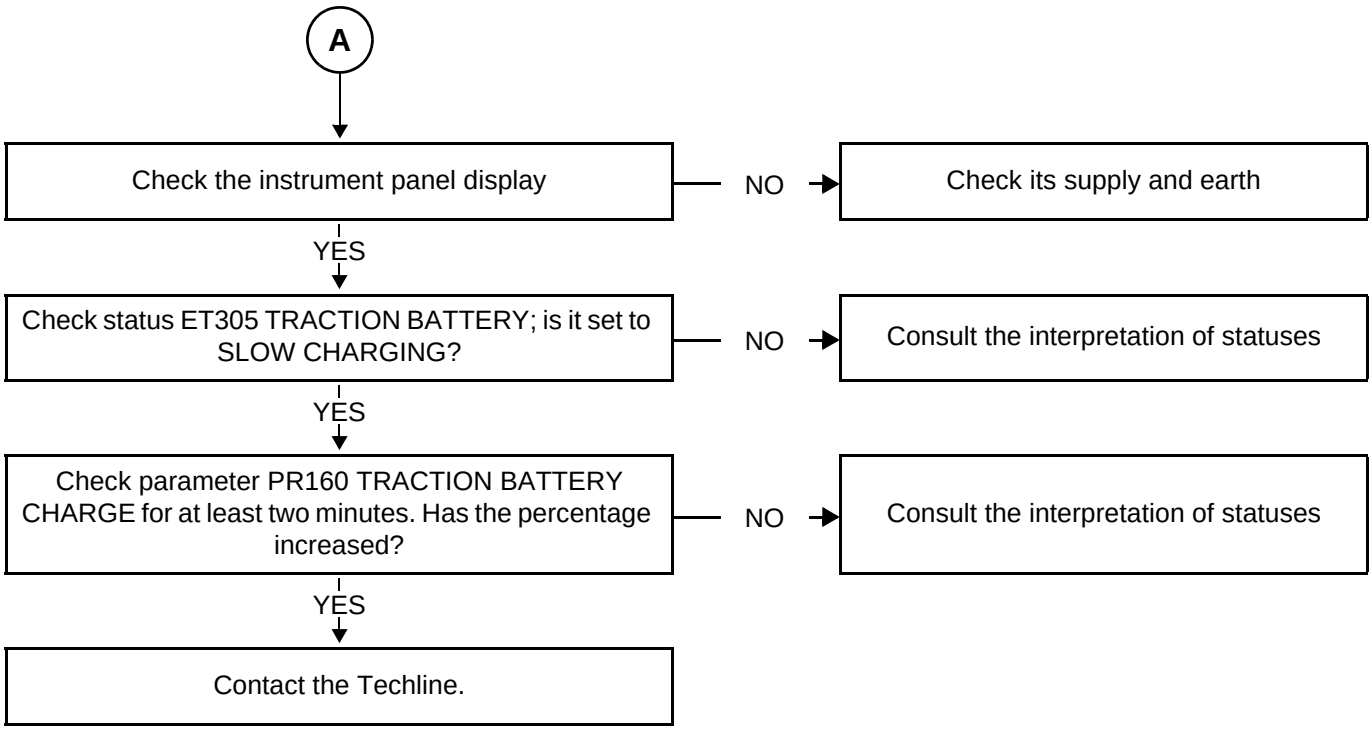

ALP16	The charging plug is jammed in the charging terminal

NOTES	
	Only consult this customer complaint after a complete check with the diagnostic tool. There must be no **present** or **stored** faults.
	Special note: Use the **Wiring Diagrams Technical Note for Twizy**

Check for the presence of faults
- NO → Deal with the faults
  Switch on the +APC. Is the plug still jammed?
- YES ↓

Check the insulation and continuity of lines **2AS** and **2AR** between components **2093 Charger** and **1016 Relay plate**. Are the checks correct?
- NO → Repair the wiring if possible, otherwise replace the wiring between the charging lead and the charger.
- YES ↓

Check that the charging cable is connected correctly
- NO → Connect the cable
- YES ↓

Replace charge relay **805**.
Is the plug still jammed in the terminal?
- NO → Contact the public service manager for the terminal in order to release the charging plug.

TDB_V04_ALP16

ALP4	Fault on R/D selection control

NOTES	
	Only consult this customer complaint after a complete check with the diagnostic tool. There must be no **present** or **stored** faults.
	Special note: Use the **Wiring Diagrams Technical Note for Twizy**

Check that the + START position is selected; is the green GO indicator light illuminated on the instrument panel?

NO → Put the vehicle in the + START position; if the GO indicator light is not illuminated, consult ALP No. 1 "**No traction at start up**"

YES ↓

Are the faults present or stored?

YES → Deal with the faults

NO ↓

Check the physical condition of the buttons: are they stuck down, broken, etc. Are they in good condition?

YES → Replace the part

NO ↓

A

TDB_V04_ALP4

ALP4 CONTINUED	

A

Check the condition of **fuse F20 (10A)** of the **passenger compartment fuse and relay box**, component code 1016. Replace the fuse if it is defective.
Check the voltage between the following connections:
- **LPD** of component **1016 passenger compartment fuse and relay plate**
- Earth **MAM**

Expected value: 12 V.
Check the continuity and insulation of the following connections:
- **BC** between components **1016** and **2093**.
- **AP29** between components**1016** and **2093**.

If the connection or connections are faulty and if there is a repair procedure (see **Renault Technical Note 6015A, Repairing electrical wiring, Wiring: Precautions for repair**), repair the wiring, otherwise replace the wiring.

If the fault is still present, contact Techline

ALP11	Illumination of the "STOP" warning light

NOTES	
	Only consult this customer complaint after a complete check with the diagnostic tool. There must be no **present** or **stored** faults.
	Special note: Use the **Wiring Diagrams Technical Note for Twizy**

Are the faults present or stored?
- YES → Deal with the faults
- NO ↓

Check the voltage of the on-board network. Is the voltage below 10 V?
- YES → Connect the vehicle to the 220 V mains supply to recharge the auxiliary battery.
- NO ↓

Run command RZ001 FAULT MEMORY. Is the warning light still illuminated?
- YES ↓

Contact the Techline

TDB_V04_ALP11

ALP12	Illumination of the "SERVICE" warning light

NOTES	
	Only consult this customer complaint after a complete check with the diagnostic tool. There must be no **present** or **stored** faults.
	Special note: Use the **Wiring Diagrams Technical Note for Twizy**

Are the faults present or stored?

YES → Deal with the faults

NO ↓

Run command RZ001 FAULT MEMORY. Is the warning light still illuminated?

YES ↓

Contact the Techline

TDB_V04_ALP12

ALP15	The charging plug is jammed in the charging terminal

NOTES	
	Only consult this customer complaint after a complete check with the diagnostic tool. There must be no **present** or **stored** faults.
	Special note: Use the **Wiring Diagrams Technical Note for Twizy**

Check for the presence of faults
- NO → Deal with the faults
  Switch on the +APC. Is the plug still jammed?
- YES ↓

Check the insulation and continuity of lines **30A** and **MAM** between components **247 Instrument panel** and **207 Minimum brake fluid sensor**. Are the checks correct?
- NO → Repair the wiring if possible, otherwise replace the wiring between the brake fluid sensor and the instrument panel
- YES ↓

Replace the brake fluid sensor
Is the warning light still on?
- YES → Replace the instrument panel

TDB_V04_ALP15

ALP 13	Traction battery recharging: takes too long

NOTES	
	Only consult this customer complaint after a complete check with the diagnostic tool. There must be no **present** or **stored** faults.
	Special note: Use the **Wiring Diagrams Technical Note for Twizy**

Check for the presence of faults

↓

Are there any faults present? — YES → Deal with the faults

NO ↓

Perform a visual inspection of the charging lead: look for cable damage, oxidation of pins, connection end melted, cracked etc…
Is the charging lead in good condition? — NO → Replace the charging lead

YES ↓

Check that the temperature of the traction battery is in line with the ambient temperature (see the temperatures of each module in the LBC session parameters) — NO → Contact Techline before replacing the traction battery.

YES ↓

A

TDB_V04_ALP13

ALP 13 CONTINUED	

A

If weather conditions have a tendency to be very cold (0°C and below), explain to the customer that the charge limits have been reached and that the operation is normal.

If the fault is still present, contact Techline

ALP14	The pedestrian audible warning unit is not working

NOTES	
	Only consult this customer complaint after a complete check with the diagnostic tool. There must be no **present** or **stored** faults.
	Special note: Use the **Wiring Diagrams Technical Note for Twizy**

Check for the presence of faults

↓

Are there any faults present? — YES → Deal with the faults

NO ↓

Perform a visual inspection of the steering column control. Is the part damaged, broken, stuck? — YES → Repair the control if possible, otherwise replace it.

NO ↓

Check the conformity of fuse F24 (5 A). Is the fuse correct? — NO → Replace the fuse

YES ↓

A

TDB_V04_ALP14

ALP14 CONTINUED	

A

In the + after ignition feed position, activate the pedestrian audible warning and check the voltage between the following connections:
- **BPA4** on component **1920**.
- **MAM**

Expected value: 12 V
Is the value correct?

YES → Replace the pedestrian audible warning unit

NO

If the value does not correspond to the expected value, check the continuity and the insulation of following connections:
- **BPA4** between components **1920** and **1016**
- **ML** between component **1920** and the chassis earth.

Are the connections correct?

If the connection is faulty and if there is a repair procedure (see **Technical Note 6015A (Renault)**).
If the connection or connections are faulty and if there is a repair procedure (see **Renault Technical Note 6015A, Repairing electrical wiring, Wiring: Precautions for repair**), repair the wiring, otherwise replace the wiring.

YES → Replace the pedestrian audible warning unit.

If the fault is still present, contact Techline

ALP5	Discharge during resting phase

NOTES	
	Only consult this customer complaint after a complete check with the diagnostic tool. There must be no **present** or **stored** faults.
	Special note: Use the **Wiring Diagrams Technical Note for Twizy**

Check for the presence of faults

↓

Are there any faults present?

YES → Deal with the faults

NO ↓

If the customer is complaining about this for the first time, explain that a small difference in the traction battery charge status is normal after a resting phase. This is due to cell balancing inside the traction battery.

If the fault is still present, contact Techline

TDB_V04_ALP5

ALP6	Insufficient driving range

NOTES	
	Only consult this customer complaint after a complete check with the diagnostic tool. There must be no **present** or **stored** faults.
	Special note: Use the **Wiring Diagrams Technical Note for Twizy**

Check for the presence of faults

↓

Are there any faults present?

YES → Deal with the faults

NO ↓

Check parameter **PR085 BATTERY HEALTH STATUS**
If the health status of the traction battery is equal to or less than 75%, this is due to the ageing of the battery and it is necessary to replace it

Contact Techline before replacing the traction battery

Generic range – Multiplexing BLOCK DIAGRAM:

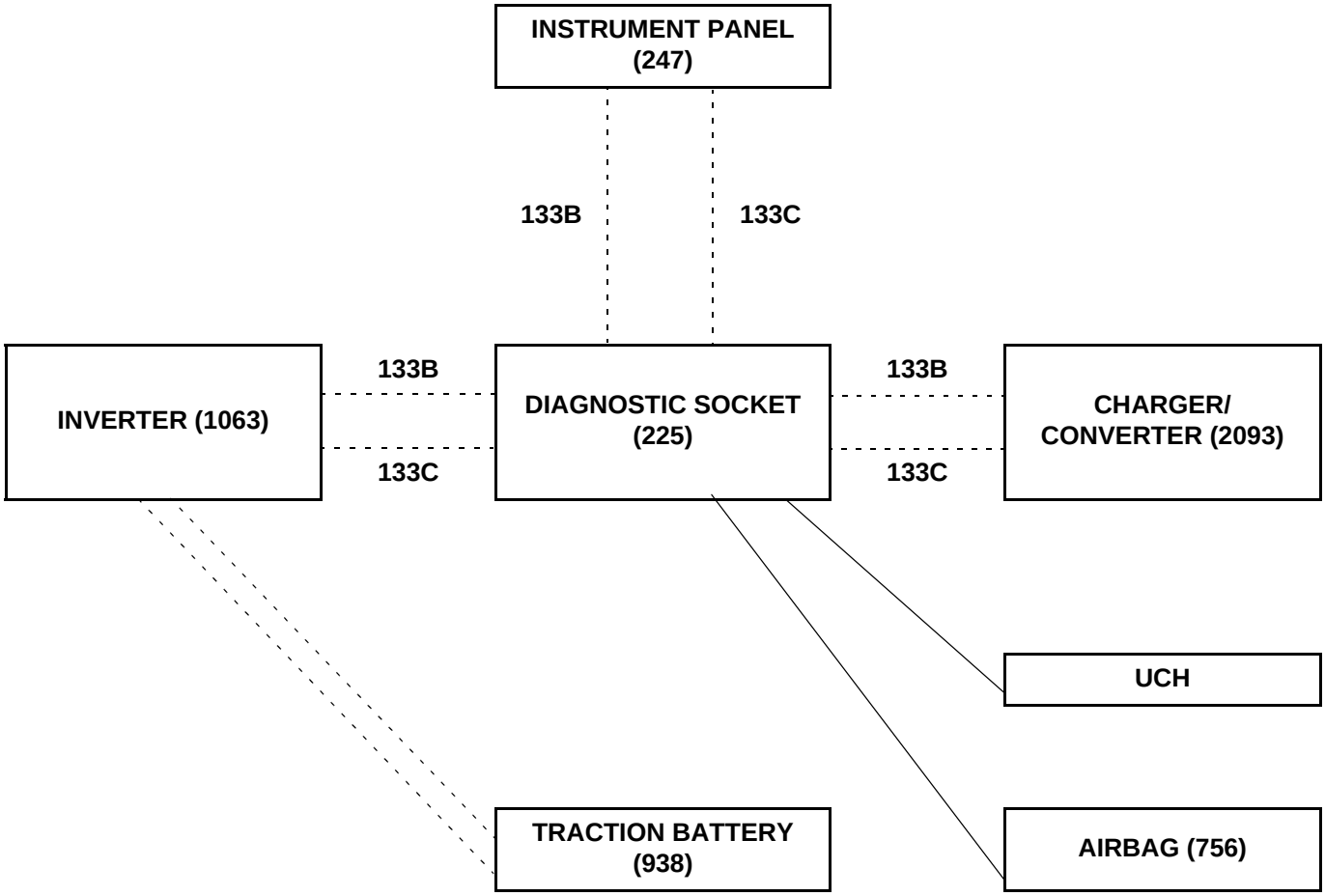

: CAN multiplex line

: HK line

INTERIOR BODY SIDE TRIM ASSEMBLY: EXPLODED VIEW

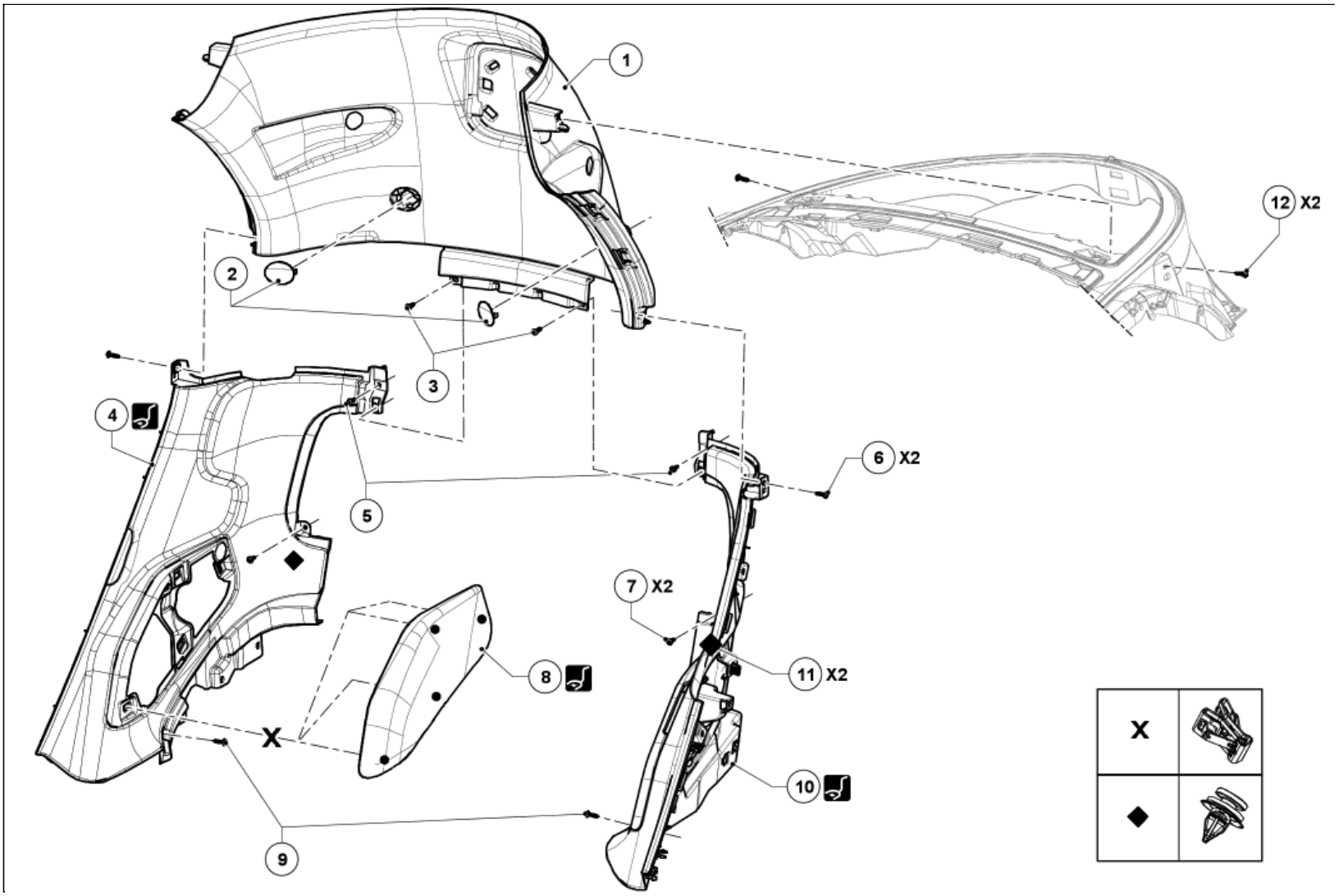

Illustration key: Description .

For fastenings with no specified tightening torque values, refer to the Table of Standard TorquesTightening torques: General information .

Marks	Designations	Informations
1	Rearheadlining	Vehicle trim : Removal - Refitting
2	Center light mounting stoppers	
3	Rear headlining lower screws	
4	Rear right-hand side panel trim	(Car. 1363) Vehicle trim : Removal - Refitting
5	Rear side panel trim upper screws	
6	Rear side panel trim side screws	
7	Rear side panel trim lower screws	
8	Rear side panel trim access flap	(Car. 1363)
9	Rear side panel trim side screws	
10	Rear left-hand side panel trim	(Car. 1363) Vehicle trim : Removal - Refitting
11	Rear side panel trim clips	
12	Rear headlining upper screws	

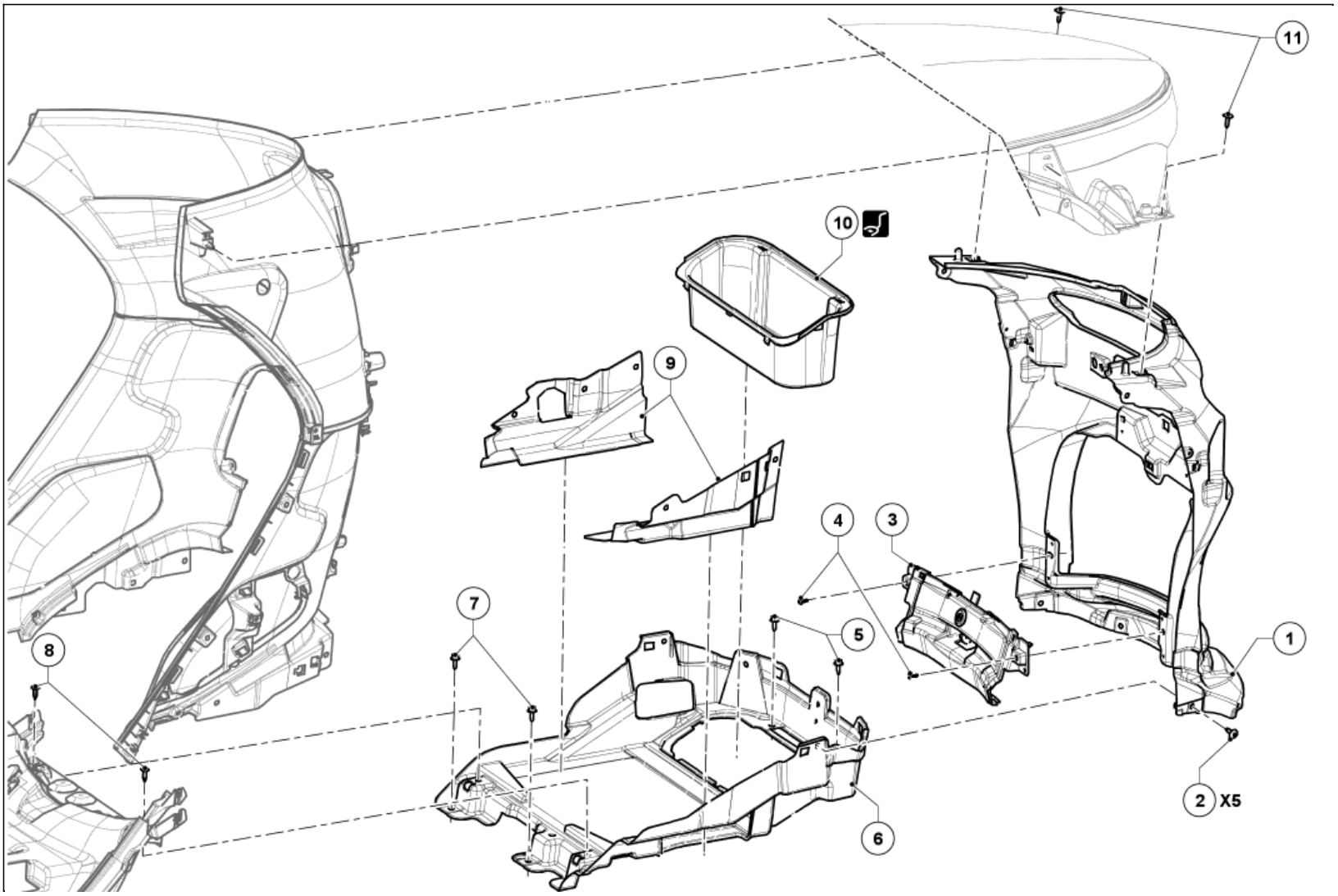

Illustration key: Description .

For fastenings with no specified tightening torque values, refer to the Table of Standard TorquesTightening torques: General information .

Marks	Designations	Informations
1	Rear bumper upper strip	
2	Rear bumper upper strip lower screws	
3	Rear centre panel lining	Vehicle trim : Removal - Refitting
4	Rear centre panel lining screws	
5	Additional floor rear screws	
6	Additional floor	
7	Additional floor front screws	
8	Centre floor screws	
9	Luggage compartment side trims	
10	Luggage compartment storage tray	(Car. 1363)
11	Rear bumper upper strip upper screws	

INTERIOR BODY SIDE TRIM ASSEMBLY: EXPLODED VIEW

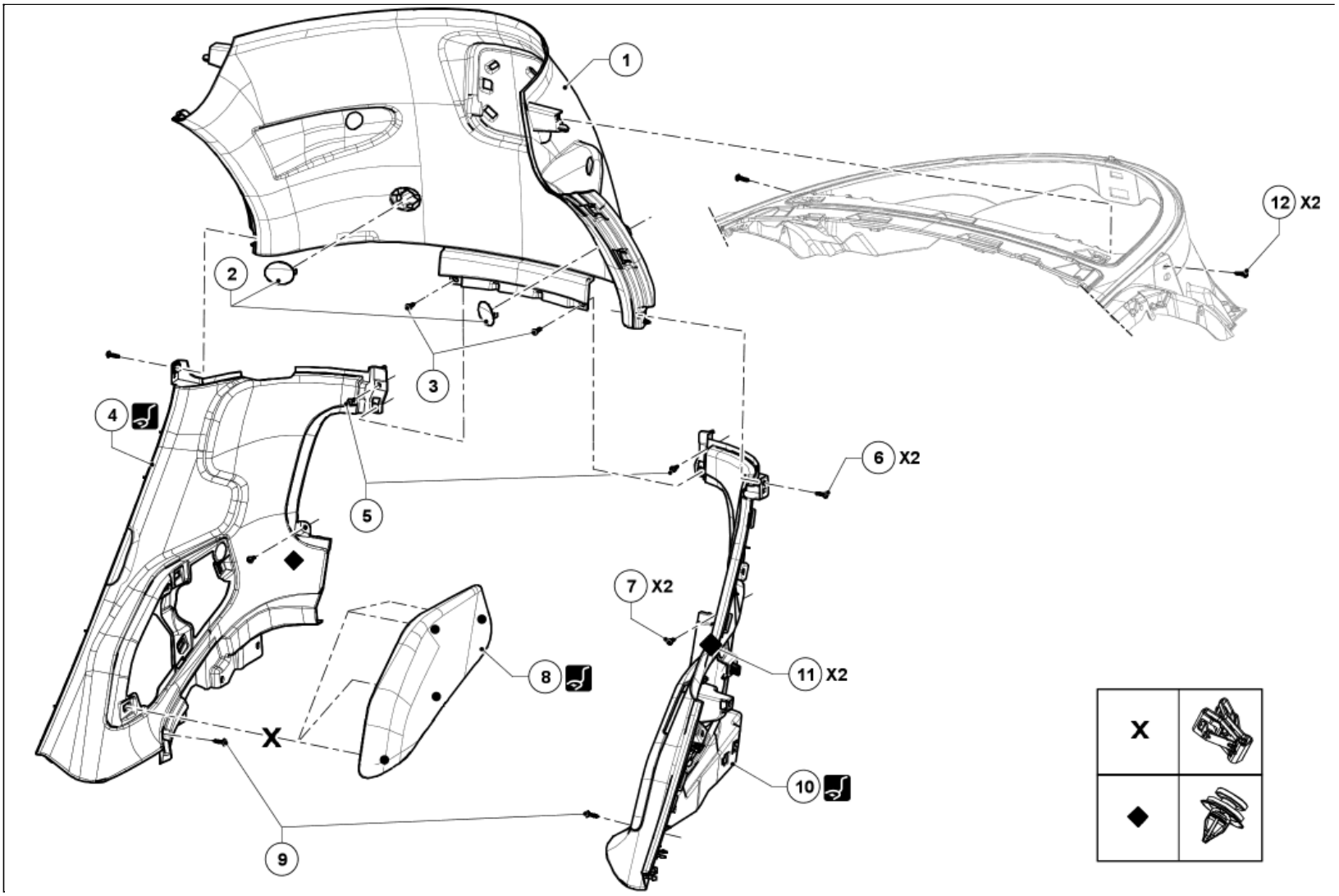

Illustration key: Description .

For fastenings with no specified tightening torque values, refer to the Table of Standard TorquesTightening torques: General information .

Marks	Designations	Informations
1	Rearheadlining	Vehicle trim : Removal - Refitting
2	Center light mounting stoppers	
3	Rear headlining lower screws	
4	Rear right-hand side panel trim	(Car. 1363) Vehicle trim : Removal - Refitting
5	Rear side panel trim upper screws	
6	Rear side panel trim side screws	
7	Rear side panel trim lower screws	
8	Rear side panel trim access flap	(Car. 1363)
9	Rear side panel trim side screws	
10	Rear left-hand side panel trim	(Car. 1363) Vehicle trim : Removal - Refitting
11	Rear side panel trim clips	
12	Rear headlining upper screws	

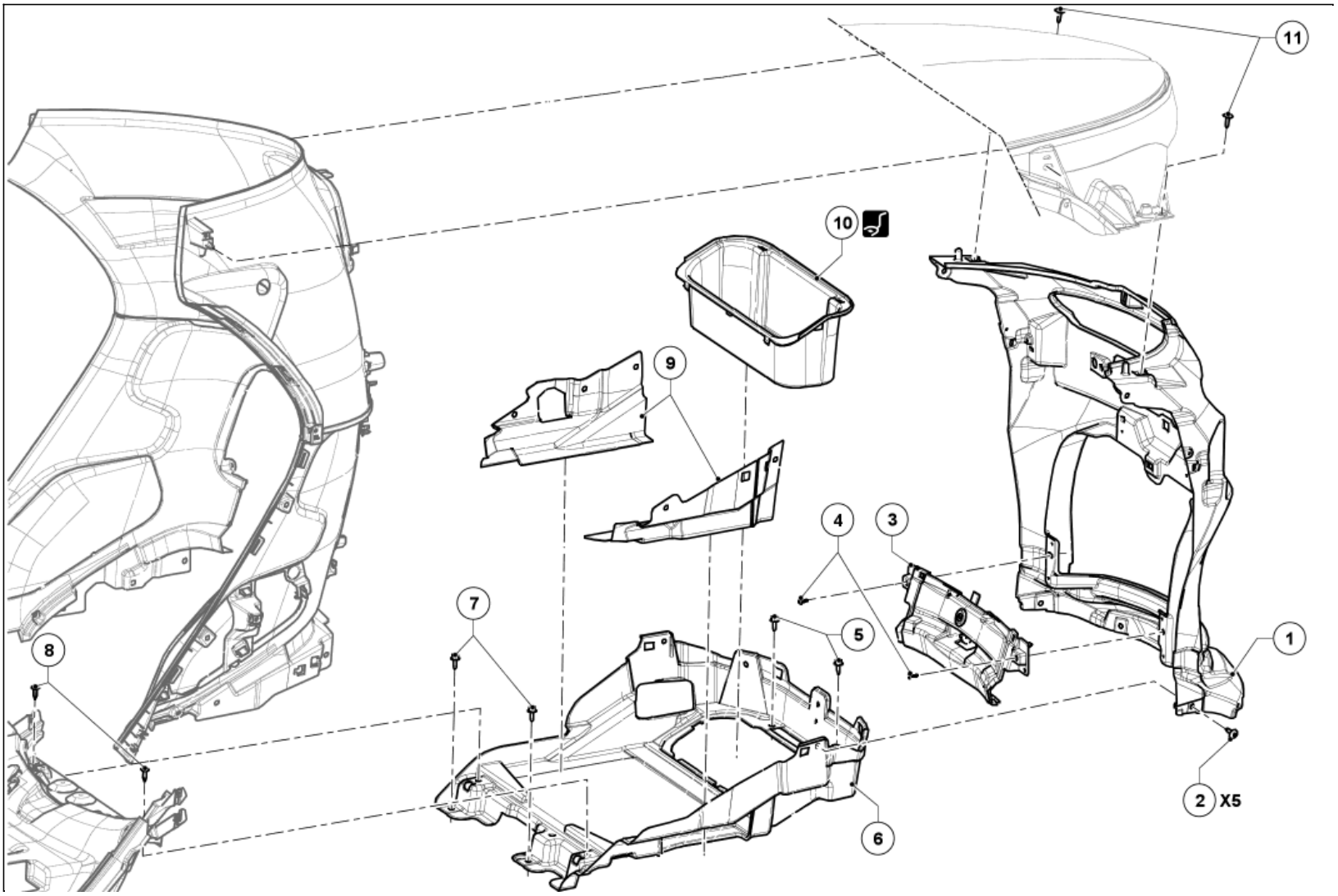

Illustration key: Description .

For fastenings with no specified tightening torque values, refer to the Table of Standard TorquesTightening torques: General information .

Marks	Designations	Informations
1	Rear bumper upper strip	
2	Rear bumper upper strip lower screws	
3	Rear centre panel lining	Vehicle trim : Removal - Refitting
4	Rear centre panel lining screws	
5	Additional floor rear screws	
6	Additional floor	
7	Additional floor front screws	
8	Centre floor screws	
9	Luggage compartment side trims	
10	Luggage compartment storage tray	(Car. 1363)
11	Rear bumper upper strip upper screws	

TWIZY

8 Electrical equipment

80D LIGHTING

UCH
Vdiag No.: 09

Fault finding – List and location of components	80D - 2
Fault finding – Role of components	80D - 3
Fault finding – Function	80D - 4
Fault finding – Configuration	80D - 5
Fault finding – Conformity check	80D - 6
Fault finding – Status summary table	80D - 8
Fault finding – Interpretation of statuses	80D - 9
Fault finding – Command summary table	80D - 18
Fault finding – Interpretation of commands	80D - 19
Fault finding – Customer complaints	80D - 23
Fault finding – Fault finding charts	80D - 24

"The repair procedures given by the manufacturer in this document are based on the technical specifications current when it was prepared.

The procedures may be modified as a result of changes introduced by the manufacturer in the production of the various component units and accessories from which his vehicles are constructed."

All rights reserved by Renault s.a.s.

Copying or translating, in part or in full, of this document or use of the service part reference numbering system is forbidden without the prior written authority of Renault s.a.s.

© Renault s.a.s. 2012

1- right-hand side light	8- rear right-hand side light
2- left-hand side light	9- rear left-hand side light
3- left-hand dipped beam headlight	10- right-hand brake light
4- right-hand dipped beam headlight	11- left-hand brake light
5- front left-hand indicator light	12- number plate light
6- front right-hand indicator light	13- rear left-hand indicator light
7- reversing light	14- rear right-hand indicator light

Side lights:
The side lights are switched on directly using the lighting stalk, via the passenger compartment fuse box.
This function lights all the side lights (front and rear) as well as the number plate lighting.

Dipped headlights:
The dipped beam headlights are switched on directly using the lighting stalk, via the passenger compartment fuse box.
This function lights only the two bulbs providing the dipped headlights function.

Main beam headlights:
The main beam headlights are switched on directly using the lighting stalk, via the passenger compartment fuse box.
This function lights only the two bulbs providing the main beam headlights function.

Hazard warning lights:
The "hazard warning lights illumination request" signal from the hazard warning lights switch is sent to the UCH, which controls the hazard warning lights.
This function lights only the hazard warning lights.

Indicators:
The "left-hand or right-hand indicators illumination request" signal initiated by the driver using the lighting stalk is sent to the UCH, which controls the left-hand and right-hand indicators.

Layout of the lighting function
The signalling function is provided by the UCH computer. This computer is connected via a wire connection.
The UCH interprets the driver's intention via the steering column switch, then transmits the lighting requests.
These requests are controlled by the UCH.
The exterior lighting is controlled directly by the steering column switch.
The LIGHTING function is divided into two sub-functions: **lighting control and lighting power**.
This function is managed directly, without the intervention of the UCH.

1. Lighting control

Operated by the driver
The UCH receives the driver's request via the steering column switches and the hazard warning lights button.
View the statuses of the available commands (see Status summary table).

2. Lighting power

The UCH manages the supply to the indicators.
The operation of the lights supplied by the UCH can be checked using the actuator commands **AC022 Left-hand indicator and AC023 Right-hand indicator**

Equipment required:
CLIP diagnostic tool.

Configurations of the lighting function in the UCH

Configuration available on the **diagnostic tool SC008 with its associated configuration reading**:

Configuration	Configuration reading	Name of configuration	Option	Configuration
CF054	LC009	Hazard warning light activation in the event of an impact	WITH or WITHOUT	SC008 UCH type (See 87B, Passenger compartment connection unit)

- Check the configurations in the **Read configuration** menu.

NOTES	Only perform this conformity check after a complete check with the **diagnostic tool**. The values shown in this conformity check are given as examples. Test conditions: **+ after ignition feed**.

SUB-FUNCTION: LIGHTING CONTROL

Function	Parameter or state checked or action		Display and notes	Fault finding
Lighting control	**ET484**	Side lights signal	**PRESENT or ABSENT**	**In the event of an inconsistency**, apply the interpretation of status **ET484**
	ET485	Hazard warning lights signal	**PRESENT or ABSENT**	**In the event of an inconsistency**, apply the interpretation of status **ET485**.
	ET486	Right-hand indicator signal	**PRESENT or ABSENT**	**In the event of an inconsistency**, apply the interpretation of status **ET486**
	ET487	Left-hand indicator signal	**PRESENT or ABSENT**	**In the event of an inconsistency**, apply the interpretation of status **ET487**

NOTES	Only perform this conformity check after a complete check with the **diagnostic tool**. The values shown in this conformity check are given as examples. Test conditions: **+ after ignition feed**.

SUB-FUNCTION: LIGHTING CONTROL (CONTINUED)

Function	Parameter or state checked or action		Display and notes	Fault finding
Lighting control	**AC023**	RH direction indicator	This command is used to activate the right-hand direction indicators.	**In the event of a fault**, apply the interpretation of command **AC023**.
	AC022	LH direction indicator	This command is used to activate the left-hand direction indicators.	**In the event of a fault**, apply the interpretation of command **AC022**.

Tool status	Diagnostic tool title
ET487	Left-hand indicator signal
ET486	Right-hand indicator signal
ET484	Side lights signal
ET485	Hazard warning lights signal

ET487	LEFT-HAND INDICATOR SIGNAL

STATUS SPECIFICATION	**PRESENT** when the left-hand indicator is switched on. **ABSENT** if there is no request for the left-hand indicator.

NOTES	There must be no **present** or **stored** faults. Switch on the ignition. Activate the left-hand indicator lights control using the lighting stalk. The status must be **PRESENT**
	Special note: Use the **Wiring Diagrams Technical Note for Twizy**.

Check the connection and condition of the direction indicator stalk connector, component code **209** and the UCH connector, component code **645**. If the connectors are faulty and if there is a repair procedure (see **Renault Technical Note 6015A, Repairing electrical wiring, Wiring: Precautions for repair**), repair the connectors, otherwise replace the wiring.
Check for an **earth** on connection **MAM** of component **209**. If the connection is faulty and if there is a repair procedure (see **Renault Technical Note 6015A, Repairing electrical wiring, Wiring: Precautions for repair**), repair the wiring, otherwise replace the wiring.
Check the operation of the indicator lighting stalk in the left-hand indicator position: Check the **continuity** between connections **64T** and **MAM**.

AFTER REPAIR	Carry out another fault finding check on the system. Deal with any other faults. Clear the **stored** faults.

ET487 CONTINUED	

Disconnect the left-hand indicator connector from the UCH. Check the **insulation, continuity**, and the **absence of interference resistance** on the following connections: • **64T** between components **209** and **645**. • **MAM** between component **209** and **the earth**. If the connection or connections are faulty and if there is a repair procedure (see **Technical Note 6015A (Renault), Repairing electrical wiring, Wiring: Precautions for repair**), repair the wiring, otherwise replace the wiring.
If the earth and the connections are correct, replace the lighting stalk, component code **209** (see **MR 454 Mechanical, 84A, Controls - Signalling, Signal and lighting switch: Removal - Refitting**).
If the fault is still present, contact the Techline.

AFTER REPAIR	Carry out another fault finding check on the system. Deal with any other faults. Clear the **stored** faults.

ET486	RIGHT-HAND INDICATOR SIGNAL

STATUS SPECIFICATION	**PRESENT** when the right-hand indicator is switched on. **ABSENT** if there is no request for the right-hand indicator.

NOTES	There must be no **present** or **stored** faults. Switch on the ignition. Activate the right-hand indicator light control using the lighting stalk. The status must be **PRESENT**
	Special note: Use the **Wiring Diagrams Technical Note for Twizy**.

Check the connection and condition of the lighting stalk connector, component code **209** and the UCH connector, component code **645**. If the connectors are faulty and if there is a repair procedure (see **Renault Technical Note 6015A, Repairing electrical wiring, Wiring: Precautions for repair**), repair the connectors, otherwise replace the wiring.
Check for an **earth** on connection **MAM** of component **209**. If the connection is faulty and if there is a repair procedure (see **Renault Technical Note 6015A, Repairing electrical wiring, Wiring: Precautions for repair**), repair the wiring, otherwise replace the wiring.
Check the operation of the lighting stalk, component code **209** in the right-hand indicator position: Check the **continuity** between connections **64S** and **MAM**.

AFTER REPAIR	Carry out another fault finding check on the system. Deal with any other faults. Clear the **stored** faults.

UCH_V09_ET486

ET486 CONTINUED	

Disconnect the right-hand indicator connector from the UCH. Check the **insulation, continuity**, and the **absence of interference resistance** on the following connections: • **64S** between components **209** and **645**. • **MAM** between component **209** and **the earth**. If the connection or connections are faulty and if there is a repair procedure (see **Technical Note 6015A (Renault), Repairing electrical wiring, Wiring: Precautions for repair**), repair the wiring, otherwise replace the wiring.
If the earth and the connections are correct, replace the lighting stalk, component code **209** (see **MR 454 Mechanical, 84A, Controls - Signalling, Signal and lighting switch: Removal - Refitting).**
If the fault is still present, contact the Techline.

AFTER REPAIR	Carry out another fault finding check on the system. Deal with any other faults. Clear the **stored** faults.

ET484	SIDE LIGHTS SIGNAL

STATUS SPECIFICATION	**PRESENT** when the side lights are switched on. **ABSENT** if there is no request for the side lights.

NOTES	There must be no **present** or **stored** faults. Activate the side lights switch. The status must be **PRESENT** and the side lights on.
	Special note: Use the **Wiring Diagrams Technical Note for Twizy**.

Check the presence and condition of fuses **F20 (10 A**) and **F19 (10 A**) on the passenger compartment fuse box, component code **1016 and F1 (50 A**) on the maxi fuse board, component code 1793 (see **MR 454 Mechanical, 81C, Fuses, Fuses: List and location of components**).
Check the connection and condition of the connector of the maxi fuse board, component code 1793, of the passenger compartment fuse box, component code **1016** and of the switch stalk, component code **209**. If the connector is faulty and if there is a repair procedure (see **Technical Note 6015A (Renault), Repairing electrical wiring, Wiring: Precautions for repair**), repair the connector, otherwise replace the wiring.
Check for **+12 V** on connections **BP13** of component **209**. If the connection or connections are faulty and if there is a repair procedure (see **Technical Note 6015A (Renault), Repairing electrical wiring, Wiring: Precautions for repair**), repair the wiring, otherwise replace the wiring.

AFTER REPAIR	Carry out another fault finding check on the system. Deal with any other faults. Clear the **stored** faults.

ET484 CONTINUED 1	

Check between the lighting stalk and the engine fuse and relay box:
Check the continuity and insulation of the following connections:
- **BP13** between components **209 and 1793**,

If the connection or connections are faulty and if there is a repair procedure (see **Technical Note 6015A (Renault), Repairing electrical wiring, Wiring: Precautions for repair**), repair the wiring, otherwise replace the wiring.

Check for **+12 V** (when the side lights are requested) on the following connection:
- **LPG** of component 1016 for the right-hand side light
- **LPD** of component 1016 for the left-hand side light

If the connection or connections are faulty and if there is a repair procedure (see **Technical Note 6015A (Renault), Repairing electrical wiring, Wiring: Precautions for repair**), repair the wiring, otherwise replace the wiring.

Check **the continuity and insulation** of the following connections:
- **LPG** between components **1016** and 185 for the right-hand side light
- **LPD** between components **1016** and 184 for the left-hand side light
- **L** between components **1016** and **209**

If the connection or connections are faulty and if there is a repair procedure (see **Technical Note 6015A (Renault), Repairing electrical wiring, Wiring: Precautions for repair**), repair the wiring, otherwise replace the wiring.

AFTER REPAIR	Carry out another fault finding check on the system. Deal with any other faults. Clear the **stored** faults.

ET484 CONTINUED 2	

Check for **+12 V** (when the side lights are requested) on the following connection:
- **L** of component **209**

If the connection or connections are faulty and if there is a repair procedure (see **Technical Note 6015A (Renault), Repairing electrical wiring, Wiring: Precautions for repair**), repair the wiring, otherwise replace the wiring.

If the supplies and connections are correct, replace the lighting stalk, component code **209** (see **MR 454 Mechanical, 84A, Controls - Signals, Signal and lighting switch: Removal - Refitting**).

If the fault is still present, contact the Techline.

AFTER REPAIR	Carry out another fault finding check on the system. Deal with any other faults. Clear the **stored** faults.

ET485	HAZARD WARNING LIGHTS SIGNAL

STATUS SPECIFICATION	**PRESENT** when the hazard warning lights are switched on. **ABSENT** if there is no request for the hazard warning lights.

NOTES	There must be no **present** or **stored** faults. Activate the hazard warning lights switch using the button. The status must be **PRESENT**
	Special note: Use the **Wiring Diagrams Technical Note for Twizy**.

Check the connection and condition of the hazard warning lights switch connector, component code **125**. If the connector is faulty and if there is a repair procedure (see **Technical Note 6015A (Renault), Repairing electrical wiring, Wiring: Precautions for repair**), repair the connector, otherwise replace the wiring.
Check for the **earth** on connection **MAM** of component **125**. If the connection is faulty and if there is a repair procedure (see **Renault Technical Note 6015A, Repairing electrical wiring, Wiring: Precautions for repair**), repair the wiring, otherwise replace the wiring.
Check the operation of the hazard warning lights control. Check **the continuity** between the following connections **MAM** and **64Q** of component **125**: If the connection or connections are faulty and if there is a repair procedure (see **Technical Note 6015A (Renault), Repairing electrical wiring, Wiring: Precautions for repair**), repair the wiring, otherwise replace the wiring.

AFTER REPAIR	Carry out another fault finding check on the system. Deal with any other faults. Clear the **stored** faults.

ET485 CONTINUED	

Check the **insulation, continuity**, and the **absence of interference resistance** on the following connections:
- **64Q** between components **125** and **645.**
- **MAM** between component **125** and **earth.**

If the connection or connections are faulty and if there is a repair procedure (see **Technical Note 6015A (Renault), Repairing electrical wiring, Wiring: Precautions for repair**), repair the wiring, otherwise replace the wiring.

If the fault is still present, contact the Techline.

AFTER REPAIR	Carry out another fault finding check on the system. Deal with any other faults. Clear the **stored** faults.

Tool commands	Diagnostic tool title	Comments
AC022	LH direction indicator	This command is used to activate the left-hand indicator.
AC023	RH direction indicator	This command is used to activate the right-hand indicator.

AC022	LEFT-HAND DIRECTION INDICATOR

NOTES	This command is used to activate the left-hand indicator. There must be no **present** or **stored** faults. Switch on the ignition.
	Special note: Use the **Wiring Diagrams Technical Note for Twizy**.

Check the condition of the bulb of the left-hand indicator. Replace the bulb if necessary (see **MR 454 Mechanical, 80B, Headlights, Side direction indicator: Removal - Refitting**).
Check the connection and condition of the connector of the UCH, component code **645**, of the rear left-hand indicator, component code **2330**, of the front left-hand indicator, component code **256** and of the audible warning, component code 1838. If the connectors are faulty and if there is a repair procedure (see **Renault Technical Note 6015A, Repairing electrical wiring, Wiring: Precautions for repair**), repair the connectors, otherwise replace the wiring.
Check for **earth** on the following connections: • **MB** of component **256**, • **MG** of component **2330**, • **MG** of component **1838**, If the connection or connections are faulty and if there is a repair procedure (see **Technical Note 6015A (Renault), Repairing electrical wiring, Wiring: Precautions for repair**), repair the wiring, otherwise replace the wiring.

AFTER REPAIR	Carry out a road test, then check with the **diagnostic tool**.

AC022 CONTINUED	

Check the **continuity**, **insulation** and **absence of interference resistance** on the following connections:
- **64C** between components **645** and **2330**,
- **64C** between components **645** and **256**,
- **64C** between components **645** and**1838**
- **MG** between component **1838** and **earth**,
- **MB** between component **256** and **earth**,
- **MG** between component **2330** and **earth**,

If the connection or connections are faulty and if there is a repair procedure (see **Technical Note 6015A (Renault), Repairing electrical wiring, Wiring: Precautions for repair**), repair the wiring, otherwise replace the wiring.

If the fault is still present, contact the Techline.

AFTER REPAIR	Carry out a road test, then check with the **diagnostic tool**.

AC023	RIGHT-HAND DIRECTION INDICATOR

NOTES	This command is used to activate the right-hand indicator. There must be no **present** or **stored** faults. Switch on the ignition.
	Special note: Use the **Wiring Diagrams Technical Note for Twizy**.

Check the condition of the bulb of the right-hand indicator. Replace the bulb if necessary (see **MR 454 Mechanical, 80B, Headlights, Side direction indicator: Removal - Refitting**).
Check the connection and condition of the connector of the UCH, component code **645**, of the rear right-hand indicator, component code **2329**, of the front right-hand indicator, component code **255** and of the audible warning, component code **1838** If the connectors are faulty and if there is a repair procedure (see **Renault Technical Note 6015A, Repairing electrical wiring, Wiring: Precautions for repair**), repair the connectors, otherwise replace the wiring.
Check for **earth** on the following connections: • **MB** of component **255**, • **MG** of component **1838**, • **MG** of component **2329**. If the connection or connections are faulty and if there is a repair procedure (see **Technical Note 6015A (Renault), Repairing electrical wiring, Wiring: Precautions for repair**), repair the wiring, otherwise replace the wiring.

AFTER REPAIR	Check the system operation.

AC023 CONTINUED	

Check the **continuity**, **insulation and absence of interference resistance** on the following connections:
- **64D** between components **645** and **2329**,
- **64D** between components **645** and **255**,
- **64D** between components **645** and **1838**,
- **MG** between component **1838** and **earth**,
- **MB** between component **255** and **earth**,
- **MG** between component **2329** and **earth**,

If the connection or connections are faulty and if there is a repair procedure (see **Technical Note 6015A (Renault), Repairing electrical wiring, Wiring: Precautions for repair**), repair the wiring, otherwise replace the wiring.

If the fault is still present, contact the Techline.

AFTER REPAIR	Check the system operation.

NOTES	Only refer to these customer complaints after carrying out a complete check with the diagnostic tool

LIGHTING

No side lights	ALP 2
No dipped beam headlights	ALP 3
No headlights	ALP 4
The brake lights operate erratically	ALP 9
The brake lights are still illuminated and the brake light switch is released	ALP 10
The reversing light operates erratically	ALP 11
The flashing light of the hazard warning lights control button does not work	ALP 12
The backlighting of the hazard warning lights control button operates erratically	ALP 13

ALP 2	NO SIDE LIGHTS

NOTES	**Only consult this customer complaint after carrying out a complete check with the diagnostic tool.** There must be no **present** or **stored** faults. Check the conformity of status **ET484 Side lights signal**. If not correct, refer to the interpretation of this status.
	Special note: Use the **Wiring Diagrams Technical Note for Twizy**.

Check the condition of the bulbs. Replace the bulbs if they are defective (see **MR 454, Mechanical, 81A, Rear lighting, Rear light bulb: Removal - Refitting**).
Check the presence and condition of fuses **F20 (10 A)** and **F19 (10 A)** on component **1016.** Replace the fuse if the check is not correct.
Check the condition and connection of the connectors of the left-hand side light, component code 185, of the left-hand light on the boot lid, component code **1285,** of the right-hand side light, component code **184,** of the right-hand number plate light, component code **166**, of the left-hand number plate light, component code **167** and of the lighting stalk, component code **209**. If the connector is faulty and if there is a repair procedure (see **Technical Note 6015A (Renault), Repairing electrical wiring, Wiring: Precautions for repair**), repair the connector, otherwise replace the wiring.

AFTER REPAIR	Check the system operation.

ALP 2 CONTINUED 1	NO SIDE LIGHTS

Check for **+12 V** (when the side lights are requested) on the following connections:
- **LPD** of components **184 and 1285**,
- **LPG** of components **185 and 1285**.

Check for **earth** on the following connections:
- **MB** of component **185**,
- **MG** of component **1285**,
- **MB** of component **184**,

If the connection or connections are faulty and if there is a repair procedure (see **Technical Note 6015A (Renault), Repairing electrical wiring, Wiring: Precautions for repair**), repair the wiring, otherwise replace the wiring.

Side lights check:
Check **the continuity and insulation** of the following connections:
Front left-hand side light:
- **LPG** between components **185** and **1016**,
- **MB** between component **185** and **earth**,

Left-hand light on boot lid:
- **LPG** between components **1285** and **1016**,
- **MG** between component **1285** and **earth**,

Front right-hand side light:
- **LPD** between components **184** and **1016**,
- **MB** between component **184** and **earth**,

AFTER REPAIR	Check the system operation.

ALP 2 CONTINUED 2	NO SIDE LIGHTS

Right-hand light on boot lid:
- **LPD** between components **1285** and **1016**,
- **MG** between component **1285** and **earth**,

Right-hand number plate light:
- **LPD** between components **166** and **1016**,
- **MG** between component **166** and **earth**,

Left-hand number plate light:
- **LPD** between components **167** and **1016**,
- **MG** between component **167** and **earth**,

If the connection or connections are faulty and if there is a repair procedure (see **Technical Note 6015A (Renault), Repairing electrical wiring, Wiring: Precautions for repair**), repair the wiring, otherwise replace the wiring.

If the fault is still present, contact the Techline.

AFTER REPAIR	Check the system operation.

ALP 3	No dipped beam headlights

NOTES	**Only consult this customer complaint after carrying out a complete check with the diagnostic tool.** There must be no **present** or **stored** faults. Check the conformity of status **ET484 Side lights signal**. If not correct, refer to the interpretation of this status.
	Special note: Use the **Wiring Diagrams Technical Note for Twizy**.

Put the lighting stalk, component code **209** in the dipped headlights position.
Check the presence and condition of the supply fuse of the left-hand headlight, component code **227**: • **F17 (10 A)** on component **1016**, Replace the fuse(s) if the checks are not correct (see **MR 454 Mechanical, 81C, Fuses, Fuses: List and location of components**).
Check the presence and condition of the supply fuse of the right-hand headlight, component code **226**: • **F18 (10 A)** on component **1016**, Replace the fuse(s) if the checks are not correct (see **MR 454 Mechanical, 81C, Fuses, Fuses: List and location of components**).

AFTER REPAIR	Check the system operation.

UCH_V09_ALP3

ALP 3 CONTINUED 1	

Check the condition of the bulbs. Replace the bulbs if they are defective (see **MR 454 Mechanical, 80B, Front lighting: List and location of components**).

Check the **condition** and **connection** of the connectors of the left-hand headlight, component code **227**, of the right-hand headlight, component code **226**, and of the lighting stalk, component code **209**.
If the connectors are faulty and if there is a repair procedure (see **Technical Note 6015A, Repairing electrical wiring, Wiring: Precautions for repair),** repair the connector, otherwise replace the wiring.

Check for **+12 V** (when the dipped headlights are requested) on the following connections:
- **CPG** of component **227**,
- **CPD** of component **226**.

Check for **earth** on the following connections:
- **MB** of component **227**,
- **MB** of component **226**.

If the connection or connections are faulty and if there is a repair procedure (see **Technical Note 6015A (Renault), Repairing electrical wiring, Wiring: Precautions for repair**), repair the wiring, otherwise replace the wiring.

- Check **the continuity and insulation** of the following connections:

CSO between components **209** and **1016**.

Front right-hand dipped beam headlight:
- **CPG** between components **227** and **1016**,
- **MB** between component **227** and **earth**,

Front right-hand dipped beam headlight:
- **CPD** between components **226** and **1016**.
- **MB** between component **226** and **earth**,

If the connection or connections are faulty and there is a repair procedure (see **Technical Note 6015A, Repairing electrical wiring, Wiring: Precautions for repair**), repair the wiring, otherwise replace the wiring.

AFTER REPAIR	Check the system operation.

ALP 3 CONTINUED 2	

With the dipped headlights control activated, check for **+12 V** on connection **CSO** of the lighting stalk, component code **209**.
Check the presence and condition of the supply fuse of the lighting stalk, component code **209**: • **F09 (10 A)** on component **1016**, Replace the fuse(s) if the checks are not correct (see **MR 454 Mechanical, 81C, Fuses, Fuses: List and location of components**).
Check for **+12 V** on the following connection: • **AP9** of component **209**, If the connection or connections are faulty and if there is a repair procedure (see **Technical Note 6015A (Renault), Repairing electrical wiring, Wiring: Precautions for repair**), repair the wiring, otherwise replace the wiring.
Check **the continuity and insulation** of the following connection: • **AP9** between components **209** and **1016** If the connection or connections are faulty and there is a repair procedure (see **Technical Note 6015A, Repairing electrical wiring, Wiring: Precautions for repair**), repair the wiring, otherwise replace the wiring. Otherwise, replace the lighting stalk (see **MR 454 Mechanical 84A, Control - Signals, Lighting - signals switch: Removal - Refitting**)
If the fault is still present, contact the Techline.

AFTER REPAIR	Check the system operation.

ALP 4	No headlights

NOTES	**Only consult this customer complaint after carrying out a complete check with the diagnostic tool.** There must be no **present** or **stored** faults. Check the conformity of status **ET484 Side lights signal**. If not correct, refer to the interpretation of this status.
	Special note: Use the **Wiring Diagrams Technical Note for Twizy**.

Put the lighting stalk, component code **209** in the main beam headlights position.
Check the presence and condition of the supply fuse of the left-hand headlight, component code **227**: • **F15 (10 A)** on component **1016**, Replace the fuse(s) if the checks are not correct (see **MR 454 Mechanical, 81C, Fuses, Fuses: List and location of components**).
Check the presence and condition of the supply fuse of the right-hand headlight, component code **226**: • **F16 (10 A)** on component **1016**, Replace the fuse(s) if the checks are not correct (see **MR 454 Mechanical, 81C, Fuses, Fuses: List and location of components**).

AFTER REPAIR	Check the system operation.

UCH_V09_ALP4

ALP 4 CONTINUED 1	

Check the condition of the bulbs. Replace the bulbs if they are defective (see **MR 454 Mechanical, 80B, Front lighting: List and location of components**).
Check the **condition** and **connection** of the connectors of the left-hand headlight, component code **227**, of the right-hand headlight, component code **226**, and of the lighting stalk, component code **209**. If the connectors are faulty and if there is a repair procedure (see **Technical Note 6015A, Repairing electrical wiring, Wiring: Precautions for repair),** repair the connector, otherwise replace the wiring.
Check for **+12 V** (when the dipped headlights are requested) on the following connections: • **RPG** of component **227**, • **RPD** of component **226**. Check for **earth** on the following connections: • **MB** of component **227**, • **MB** of component **226**. If the connection or connections are faulty and if there is a repair procedure (see **Technical Note 6015A (Renault), Repairing electrical wiring, Wiring: Precautions for repair**), repair the wiring, otherwise replace the wiring.

AFTER REPAIR	Check the system operation.

ALP 4 CONTINUED 2	

Check the **continuity, insulation** and **absence of interference resistance** on the following connections:
- **R** between components **209** and **1016**.

Front left-hand main beam headlight:
- **RPG** between components **227** and **1016**,
- **MB** between component **227** and **earth**,

Front right-hand main beam headlight:
- **RPD** between components **226** and **1016**.
- **MB** between component **226** and **earth**,

If the connection or connections are faulty and there is a repair procedure (see **Technical Note 6015A, Repairing electrical wiring, Wiring: Precautions for repair**), repair the wiring, otherwise replace the wiring.

With the main beam headlights control activated, check for **+12 V** on connection **R** of the lighting stalk, component code **209**.

Check the presence and condition of the supply fuse of the lighting stalk, component code **209**:
- **F12 (20 A)** on component **1016**,

Replace the fuse(s) if the checks are not correct (see **MR 454 Mechanical, 81C, Fuses, Fuses: List and location of components**).

AFTER REPAIR	Check the system operation.

ALP 4 CONTINUED 3	

Check for **+12 V** on the following connection: • **AP8** of component **209**, If the connection or connections are faulty and if there is a repair procedure (see **Technical Note 6015A (Renault), Repairing electrical wiring, Wiring: Precautions for repair**), repair the wiring, otherwise replace the wiring.
Check **the continuity and insulation** of the following connection: • **AP8** between components **209** and **1016** If the connection or connections are faulty and there is a repair procedure (see **Technical Note 6015A, Repairing electrical wiring, Wiring: Precautions for repair**), repair the wiring, otherwise replace the wiring. Otherwise, replace the lighting stalk (see **MR 454 Mechanical 84A, Control - Signals, Lighting - signals switch: Removal - Refitting**)
If the fault is still present, contact the Techline

AFTER REPAIR	Check the system operation.

ALP 9	The brake lights operate erratically

NOTES	**Only consult this customer complaint after carrying out a complete check with the diagnostic tool.** There must be no **present** or **stored** faults.
	Special note: Use the **Wiring Diagrams Technical Note for Twizy**.

Check the condition of the bulbs. Replace the bulbs if they are defective (see **MR 454, Mechanical, 81A, Rear lighting, Rear light bulb: Removal - Refitting**).
Check the presence and condition of fuse **F06 (15 A)** on component **1016**. Replace the fuse if the check is not correct.
Check the condition and connection of the connectors of the brake light switch, component code **160,** of the left-hand light on the boot lid, component code **1285** If the connectors are faulty and if there is a repair procedure (see **Technical Note 6015A, Repairing electrical wiring, Wiring: Precautions for repair**), repair the connectors, otherwise replace the wiring.
Check for **+12 V after ignition feed** on the brake lights switch, component code **160** on the following connection: • **AP2** of component **160**. Check **the continuity and insulation** of the following connection: • **AP2** between components **1016** and **160**. If the connection or connections are faulty and there is a repair procedure (see **Technical Note 6015A, Repairing electrical wiring, Wiring: Precautions for repair**), repair the wiring, otherwise replace the wiring.

AFTER REPAIR	Check the system operation.

UCH_V09_ALP9

ALP 9 CONTINUED	

Check for **+12 V after ignition feed** (when the brake lights are requested by the brake pedal) on the following connection:
- **65A** of component **1285**

Check for **earth** on the following connections:
- **MG** of component **1285**

If the connection or connections are faulty and if there is a repair procedure (see **Technical Note 6015A (Renault) or Technical Note 9804A (Dacia), Repairing electrical wiring, Wiring: Precautions for repair**), repair the wiring, otherwise replace it.

Check the **continuity and insulation** of the following connection:
- **65A** between components **160** and **1285**

If the connection or connections are faulty and if there is a repair procedure (see **Technical Note 6015A (Renault), Repairing electrical wiring, Wiring: Precautions for repair**), repair the wiring, otherwise replace the wiring.

Check for correct operation of the brake lights switch, component code **160**.
When the brake lights are requested by the brake pedal, check the **continuity** between connections **AP2** and **65A** of the brake light switch. If it is not correct, ensure the conformity of the switch.

If the fault is still present, contact the Techline.

AFTER REPAIR	Check the system operation.

ALP 10	**The brake lights are always on and the brake light switch is released.**

NOTES	**Only consult this customer complaint after carrying out a complete check with the diagnostic tool.** There must be no **present** or **stored** faults.
	Special note: Use the **Wiring Diagrams Technical Note for Twizy**.

Check the condition and connection of the connectors of the brake light switch, component code **160,** of the left-hand light on the boot lid, component code **1285** If the connectors are faulty and if there is a repair procedure (see **Technical Note 6015A, Repairing electrical wiring, Wiring: Precautions for repair),** repair the connector, otherwise replace the wiring.
Check the **insulation to +12 V** of the following connection: • **65A** of component **1285** If the connection or connections are faulty and if there is a repair procedure (see **Technical Note 6015A (Renault), Repairing electrical wiring, Wiring: Precautions for repair**), repair the wiring, otherwise replace it.
If the fault is still present, contact the Techline.

AFTER REPAIR	Check the system operation.

UCH_V09_ALP10

ALP 11	The reversing light operates erratically

NOTES	
	Only consult this customer complaint after carrying out a complete check with the diagnostic tool. There must be no **present** or **stored** faults.
	Special note: Use the **Wiring Diagrams Technical Note for Twizy**.

Check the condition of the bulb. Replace the bulb if it is defective (see **MR 454, Mechanical, 81A, Rear lighting, Rear light bulb: Removal - Refitting**).
Check the presence and condition of fuse **F10 (10A**) on component **1016.** Replace the fuse if the check is not correct.
Check the condition and connection of the connectors of the reversing light relay, component code **602** and of the left-hand light on the boot lid, component code **1285** If the connector is faulty and if there is a repair procedure (see **Technical Note 6015A (Renault), Repairing electrical wiring, Wiring: Precautions for repair**), repair the connector, otherwise replace the wiring.
Check for **+12 V after ignition feed** on the reversing light relay, component code **602** on the following connection: • **AP1** of component **602** Check **the continuity and insulation** of the following connection: • **AP1** between components **1016** and **602** If the connection or connections are faulty and there is a repair procedure (see **Technical Note 6015A, Repairing electrical wiring, Wiring: Precautions for repair**), repair the wiring, otherwise replace the wiring.

AFTER REPAIR	Check the system operation.

UCH_V09_ALP11

ALP 11 CONTINUED	

Check for **+12 V after ignition feed** (when the reversing lights are requested) on the following connection: • **H66P** of component **1285** Check for **earth** on the following connection: • **MG** of component **1285** If the connection or connections are faulty and if there is a repair procedure (see **Technical Note 6015A (Renault), Repairing electrical wiring, Wiring: Precautions for repair**), repair the wiring, otherwise replace the wiring.
Check the **continuity and insulation** of the following connection: • **H66P** between components **602** and **1285** If the connection or connections are faulty and if there is a repair procedure (see **Technical Note 6015A (Renault), Repairing electrical wiring, Wiring: Precautions for repair**), repair the wiring, otherwise replace the wiring.
Check the correct operation of the reversing lights relay, component code **602** When the reversing lights are requested, check the **continuity** between connections **H66P** and **MG** of the reversing lights relay. If it is not correct, ensure the conformity of the switch.
If the fault is still present, contact the Techline.

AFTER REPAIR	Check the system operation.

ALP 12	The flashing light of the hazard warning lights control button does not work

NOTES	There must be no **present** or **stored** faults. Press the hazard warning lights control. Check whether status **ET485 Hazard warning lights signal** is **PRESENT** and that the hazard warning lights are on, If not correct, refer to the interpretation of this status.
	Special note: Use the **Wiring Diagrams Technical Note for Twizy**.

Check the connection and condition of the connectors of the hazard warning lights control, component code **125** and of the UCH, component code **645**. If the connector is faulty and if there is a repair procedure (see **Technical Note 6015A (Renault), Repairing electrical wiring, Wiring: Precautions for repair**), repair the connector, otherwise replace the wiring.
Check for earth on the following connection: • **MAM** of component **125.** If the connection or connections are faulty and if there is a repair procedure (see **Technical Note 6015A (Renault), Repairing electrical wiring, Wiring: Precautions for repair**), repair the wiring, otherwise replace the wiring.
Check the **insulation, continuity** and the **absence of interference resistance** on the following connection: • **64Q** between components **125** and **645.** If the connection is faulty and if there is a repair procedure (see **Renault Technical Note 6015A, Repairing electrical wiring, Wiring: Precautions for repair**), repair the wiring, otherwise replace the wiring.
If the fault is still present, contact the Techline.

AFTER REPAIR	Check the system operation.

UCH_V09_ALP12

ALP 13	The backlighting of the hazard warning lights control button operates erratically.

NOTES	
	There must be no **present** or **stored** faults. Press the hazard warning lights control. Check the conformity of status **ET484 Side lights signal** and **ET485 Hazard warning lights signal**. If not correct, refer to the interpretation of this status.
	Special note: Use the **Wiring Diagrams Technical Note for Twizy**.

Put the lighting stalk, component code **209** in the side lights position.
Check the condition and connection of the connector of the hazard warning lights control, component code **125**. If the connector is faulty and if there is a repair procedure (see **Technical Note 6015A (Renault), Repairing electrical wiring, Wiring: Precautions for repair**), repair the connector, otherwise replace the wiring.
Check for **+12 V** (when the side lights are requested) on the following connections: • **LPD** of component **125**, Check for **earth** on the following connection: • **MAM** of component **125,** If the connection or connections are faulty and if there is a repair procedure (see **Technical Note 6015A (Renault), Repairing electrical wiring, Wiring: Precautions for repair**), repair the wiring, otherwise replace the wiring.

AFTER REPAIR	Check the system operation.

UCH_V09_ALP13

ALP 13 CONTINUED	

Check **the continuity** of the following connection:
- **LPD** between components **125** and **1016** (for a left-hand drive vehicle),

If the connection or connections are faulty and if there is a repair procedure (see **Technical Note 6015A (Renault), Repairing electrical wiring, Wiring: Precautions for repair**), repair the wiring, otherwise replace the wiring.

If the fault is still present, contact the Techline.

AFTER REPAIR	Check the system operation.

MAINTENANCEOPERATIONALINSTRUCTIONS :SERVICE

Note, one or more warnings are present in this procedure

Equipment required
Diagnostic tool
Electronic check tool

WARNING

To avoid all risk of damage to the systems, apply the safety and cleanliness instructions and operation recommendations before carrying out any repair**Vehicle: Precautions for the repair**

The Renault maintenance programme includes all checks, top-ups, adjustments, and part replacements necessary for vehicle maintenance. For information on the specific service intervals for the vehicle, refer to the maintenance booklet or to ICM.

1. CONTENT OF THE DIFFERENT TYPES OF SERVICES AND THE ANNUAL INTERMEDIATE VISIT:

1-SERVICES:

The types of service (Maintenance Service, General Service, Renault Service) and the operations to be performed may vary depending on the vehicle and the date of manufacture. To find out which specific checks and operations should be performed on the vehicle, refer to the vehicle maintenance booklet.

1- ANNUAL INTERMEDIATE VISIT:

❑ For vehicles for which the oil change is to be performed no later than every 2 years, a non-obligatory visit including the following operations is advised:

- check the engine oil level,
- check the level, condition, and sealing of the brake fluid circuit,
- check the coolant level,
- check the level, condition, and sealing of the power-assisted steering circuit,
- check the washer fluid level,
- electronic fault finding of the battery with the test tool,
- electronic fault finding of the computers,
- condition of the windscreen and rear view mirrors,

- wear of the windscreen wiper and rear wiper blades,
- check the exterior lighting and signals,
- condition and pressure of the tyres (including emergency spare wheel or tyre repair aerosol),
- condition of gaiters, rubber mounting bushes, and ball joints,
- exhaust system check,
- sealing of the front and rear shock absorbers,
- wear of the front and rear brake pads and brake discs.

NOTE: the content of the intermediate visit, as well as its commercial name, may vary from one country to another. Thus additional checks and / or operations could be added to this list. For more information, please contact the manufacturer's technical teams in your country

2. SPECIAL CONDITIONS OF CUSTOMER USE AND MAINTENANCE MANAGEMENT FOR VEHICLES EQUIPPED WITH THE OCS (OIL CONTROL SYSTEM) FOR GERMANY, ANDORRA, AUSTRIA, BELGIUM, DENMARK, SPAIN, ESTONIA, FINLAND, FRANCE, GREAT BRITAIN, GREECE, HUNGARY, IRELAND, ICELAND, ITALY, LATVIA, LIECHTENSTEIN, LITHUANIA, LUXEMBOURG, NORWAY, NETHERLANDS, POLAND, PORTUGAL, CZECH REPUBLIC, SLOVAKIA, SLOVENIA, SWEDEN, SWITZERLAND, CROATIA, ISRAEL:

Definitions:

What does it mean that a vehicle is operated under normal conditions of customer use?

A vehicle is operated under normal conditions of customer use if it is not operated under the special conditions of customer use (see below). In this case, observe the standard maintenance programme provided in the maintenance booklet or ICM (Shared World Information).

What does it mean that a vehicle is operated under special conditions of customer use?

A special condition of customer use affects the replacement frequency of one or several parts of the maintenance programme (service, air filter replacement, fuel filter replacement, etc.). The vehicle is said to operate under special conditions of customer use if:

– The instrument panel displays that a service is required (change engine oil and oil filter), only for vehicles equipped with the OCS (Oil Control System) oil quality control device. See "List of vehicles equipped with OCS or information in ICM (Shared World Information)",

– At least 50% of the vehicle operating time is with the engine idling (example: constant door-to-door driving without stopping the engine),

– At least 50% of trips are at an average speed of less than 18 mph (30 km/h) (primarily urban use, taxi, etc.),

– At least 30% of the miles driven involve towing a trailer, caravan, etc. weighing more than 500 kg (condition only for passenger vehicles),

- Use in a dusty environment (work-site, + than 600 miles (1000 km)/year on unpaved roads, etc.),

- Extended use (+ than 3000 miles (5000 km)/year) at temperatures continuously below -15˚C.

What is the OCS (Oil Control System) and what does it detect?

The OCS is a device that evaluates oil degradation by calculations, taking into account the severe engine operating conditions that affect the oil. Thus, under certain driving conditions, the instrument panel indicates to the customer that a service is required.

Which vehicles are equipped with the OCS device?

THE MODELS EQUIPPED WITH THE OCS ARE FOR THE COUNTRIES OF GERMANY, ANDORRA, AUSTRIA, BELGIUM, DENMARK, SPAIN, ESTONIA, FINLAND, FRANCE, GREAT BRITAIN, GREECE, HUNGARY, IRELAND, ICELAND, ITALY, LATVIA, LIECHTENSTEIN, LITHUANIA, LUXEMBOURG, NORWAY, NETHERLANDS, POLAND, PORTUGAL, CZECH REPUBLIC, SLOVAKIA, SLOVENIA, SWEDEN, SWITZERLAND, CROATIA, AND ISRAEL:

Note :

For the Dacia vehicles consult the ICM for the vehicles manufactured starting from 14/06/2011, before consulting the table.

For the Renault vehicles consult the ICM for the vehicles manufactured starting from 01/01/2010, before consulting the table.

Model	engine	Engine suffix	Vehicles affected:
Dacia	K9K emission control standard Euro 5	all	all
WIND	D4F, K4M	All	All
TWINGO II	D4F turbocharged	All	All
TWINGO II	K4M emission control standard Euro 5	All	All
TWINGO II	K9K	718	All
TWINGO II	K9K	740	Vehicles with oil service every 18 000 miles (30 000 Km) /2 years
TWINGO II	K9K emission control standard Euro 5	All	All
CLIO III phase 1	K9K	764	Vehicles with oil service every 18,000 miles (30,000 Km) / 1 year
CLIO III phase 2	K9K emission control standard Euro 5	All	All
CLIO III	D4F turbocharged	All	All

CLIO III	D4F	742	Vehicles with oil service every 18,000 miles (30,000 Km) / 1 year
CLIO III	K4M	862	All
MODUS	D4F turbocharged	All	All
MODUS	D4F	742	All
MODUS	K9K	764	Vehicles with oil service every 18,000 miles (30,000 Km) / 1 year
MODUS	K9K without particle filter	All	Vehicles with oil service every 18 000 miles (30 000 Km) /2 years
MODUS	K9K emission control standard Euro 5	All	All
KANGOO II	K4M emission control standard Euro 5	All	All
KANGOO II	K9K	All	All
MEGANE II and SCENIC II	K9K	732	Vehicles with oil service every 18,000 miles (30,000 Km) / 1 year
MEGANE II and SCENIC II	M9R	700,721,722	Vehicles with oil service every 18,000 miles (30,000 Km) / 1 year
MEGANE II	M9R	724	Vehicles with oil service every 12,000 miles (20,000 Km) / 1 year
MEGANE II and SCENIC II	F9Q	816,818	Vehicles with oil service every 18,000 miles (30,000 Km) / 1 year

FLUENCE and MEGANE III/SCENIC III	K9K	830	Vehicles with oil service interval every 2 years
FLUENCE and MEGANE III/SCENIC III	K9K	832, 834, 836, 837	All
FLUENCE and MEGANE III/SCENIC III	K9K emission control standard Euro 5	All	All
MEGANE III/SCENIC III	F9Q, M9R, H4J, F4R, R9M	All	All
Koleos	M9R emission control standard Euro 5	All	All
LAGUNA III	K9K,M9R,V9X	All	All
LAGUNA III	M4R	726	All
ESPACE IV	M9R	All	Vehicles with oil service every 18,000 miles (30,000 Km) / 1 year
LATITUDE	Diesel	All	All
MASTER II phase 3	G9U	All	All
TRAFIC phase 2 and 3	M9R	All	Vehicles manufactured from 01/12/06
TRAFIC phase 2 and 3	G9U	All	All
MASTER III	All	All	All

1- FOR TURKEY, ROMANIA AND BULGARIA :

For the vehicles sold starting from 01/01/2011, consult the ICM.

1- MANAGEMENT OF VEHICLE MAINTENANCE IN CASE OF DRIVING UNDER SPECIAL CONDITIONS OF CUSTOMER USE:

It is ESSENTIAL to read the instructions:

Depending on whether the vehicle is fitted with OCS or not, refer to the corresponding table below.

The tables below contain X's or notes to specify the maintenance operations to be performed depending on the special conditions of customer use.

For the other maintenance programme parts that need not be replaced early, the maintenance interval is the same as recommended for normal conditions of customer use (see the maintenance booklet or ICM). If this interval will be reached before the next customer visit, replace this part ahead of schedule.

If the vehicle is operated under several of these special conditions of customer use, apply the most stringent recommendation for replacement specified for the special conditions of use concerned.

FOR MODELS WITHOUT OCS:

	Divide by 2 the engine oil and oil filter service interval for normal conditions of use		Divide by 2 the air filter replacement interval for normal conditions of use (1)		Divide by 2 the diesel filter replacement interval for normal conditions of use (1)		Replace the belts and rollers 18,000 miles (30,000 km) sooner than for normal use conditions (1)(2)	Replace the cabin filter during every service for normal conditions of use (1)
	Distance (kilometres or miles)	Time	Distance (kilometres or miles)	Time	Distance (kilometres or miles)	Time		
At least 50% of the vehicle operating time with the engine idling (e.g. constant door-to-door driving without stopping the engine)	X	X	X	X	X	X	X	
At least 50% of trips at an average speed of less than 18 mph (30 km/h) (primarily urban use, taxi, etc.),	X		X		X		X	X

At least 30% of the miles driven while towing a trailer, caravan, etc. weighing more than 500 kg (condition only for passenger vehicles),	X				X		X	
Use in a dusty environment (work-site, + than 600 miles (1000 km)/year on unpaved roads, etc.),	X		X		X		X	X
Extended use (+ than 3000 miles (5000 km) /year) at temperatures continuously below -15˚C.	X							
(1) If the recommended interval will be reached before the next customer visit, replace the part concerned ahead of schedule. (2) Certain pulleys of certain engines must be replaced when replacing the accessories belt. See the "Supplementary operations" section.								

FOR MODELS WITH OCS (SEE THE TABLE OF MODELS EQUIPPED WITH THE

OCS AND THE COUNTRIES CONCERNED):

	Divide by 2 the engine oil and oil filter service interval for normal conditions of use (1)		Divide by 2 the air filter replacement interval for normal conditions of use (1)		Divide by 2 the diesel filter replacement interval for normal conditions of use (1)		Replace the belts and rollers 18,000 miles (30,000 km) sooner than for normal use conditions (1)(2)	Replace the cabin filter during every service for normal conditions of use (1)
	Distance (kilometres or miles)	Time	Distance (kilometres or miles)	Time	Distance (kilometres or miles)	Time		
Instrument panel display that a service is required (engine oil and oil filter service) due to the OCS (Oil Control System).	Observe the message on the vehicle instrument panel and perform the service (engine oil and oil filter service) when it is requested(1).							
At least 50% of the vehicle operating time with the engine idling (e.g. constant door-to-door driving without stopping the engine)			X	X	X	X	X	

At least 50% of trips at an average speed of less than 18 mph (30 km/h) (primarily urban use, taxi, etc.),			X		X		X	X
At least 30% of the miles driven while towing a trailer, caravan, etc. weighing more than 500 kg (condition only for passenger vehicles),					X		X	
Use in a dusty environment (work-site, + than 600 miles (1000 km)/year on unpaved roads, etc.),	X		X		X		X	X

Extended use (+ than 3000 miles (5000 km) /year) at temperatures continuously below -15˚C.	X							

(1) If the recommended interval will be reached before the next customer visit, replace the part concerned ahead of schedule.

(2) Certain pulleys of certain engines must be replaced when replacing the accessories belt. See the "Supplementary operations" section.

3. SPECIAL CONDITIONS OF CUSTOMER USE (OIL CONTROL SYSTEM) FOR THE COUNTRIES NOT MENTIONED ABOVE:

See the vehicle's maintenance booklet.

4. PROCEDURES FOR PERFORMING OPERATIONS AND CHECKS DURING THE MAINTENANCE OR SERVICE:

The customer must be warned if a check reveals a fault.

Checks marked with an asterisk depend on the vehicle or the country.

1- BODYWORK: ANTICORROSION CHECK

- Visually inspect the condition of the:
  - vehicle,
  - underside of the vehicle,
  - wheel arches.

Indicate any damage to the underbody protection, and all cuts, ruptures, scratches or corrosion anywhere on the vehicle.

This inspection contributes to the validity of the anticorrosion warranty. It is therefore necessary to complete the maintenance sheets in the maintenance booklet.

2- BODYWORK: CLEANING THE DEFLECTOR ARMS AND PANORAMIC SUNROOF MOBILE PANEL

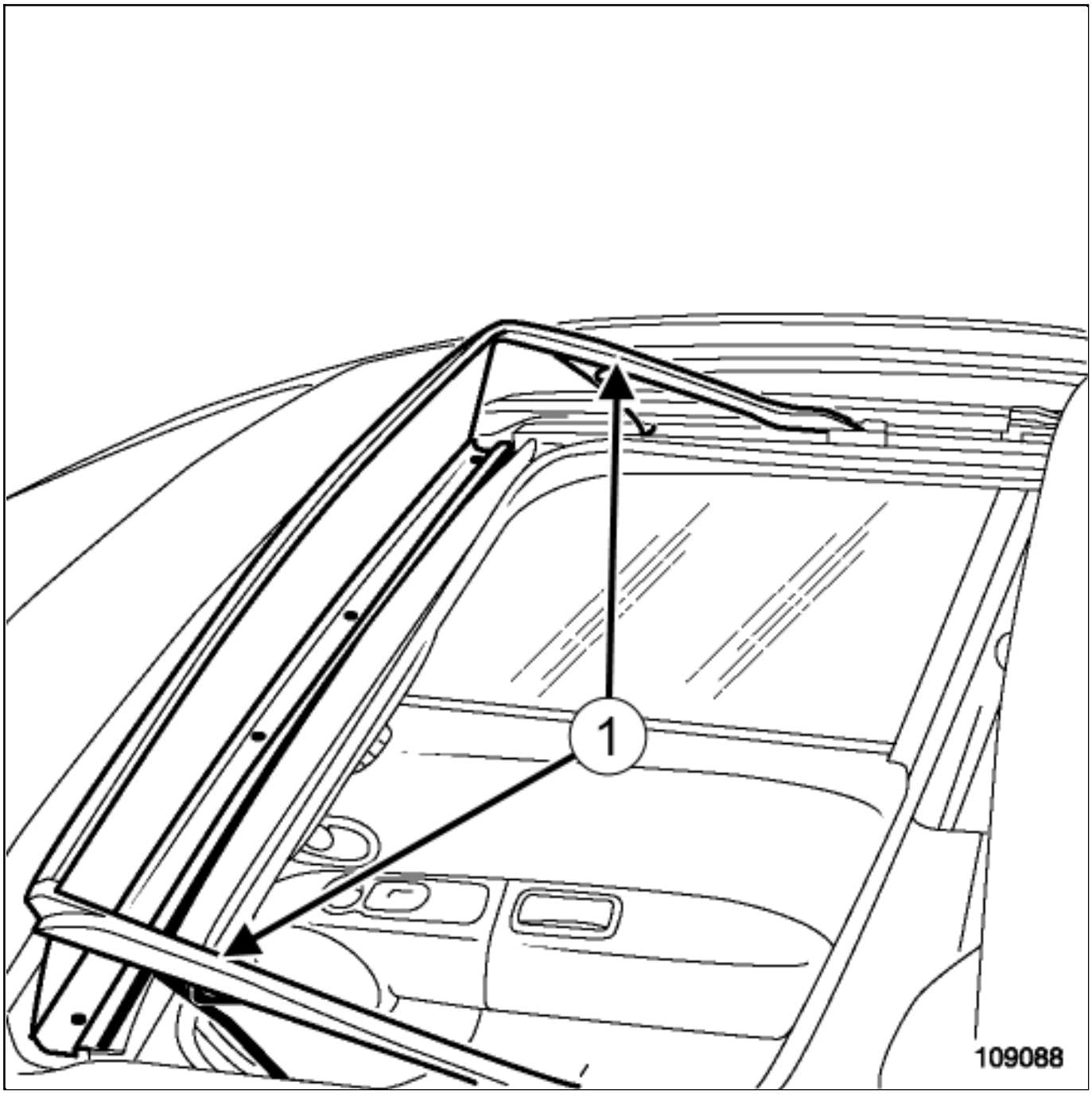

Use a dry, lint-free cloth to clean the sunroof deflector arms (1) and the section of the mobile panel with which they come into contact.

3- BODYWORK: CHECKING THE BONNET LOCK LUBRICATION AND OPERATION

1)GUILLOTINE TYPE LOCK

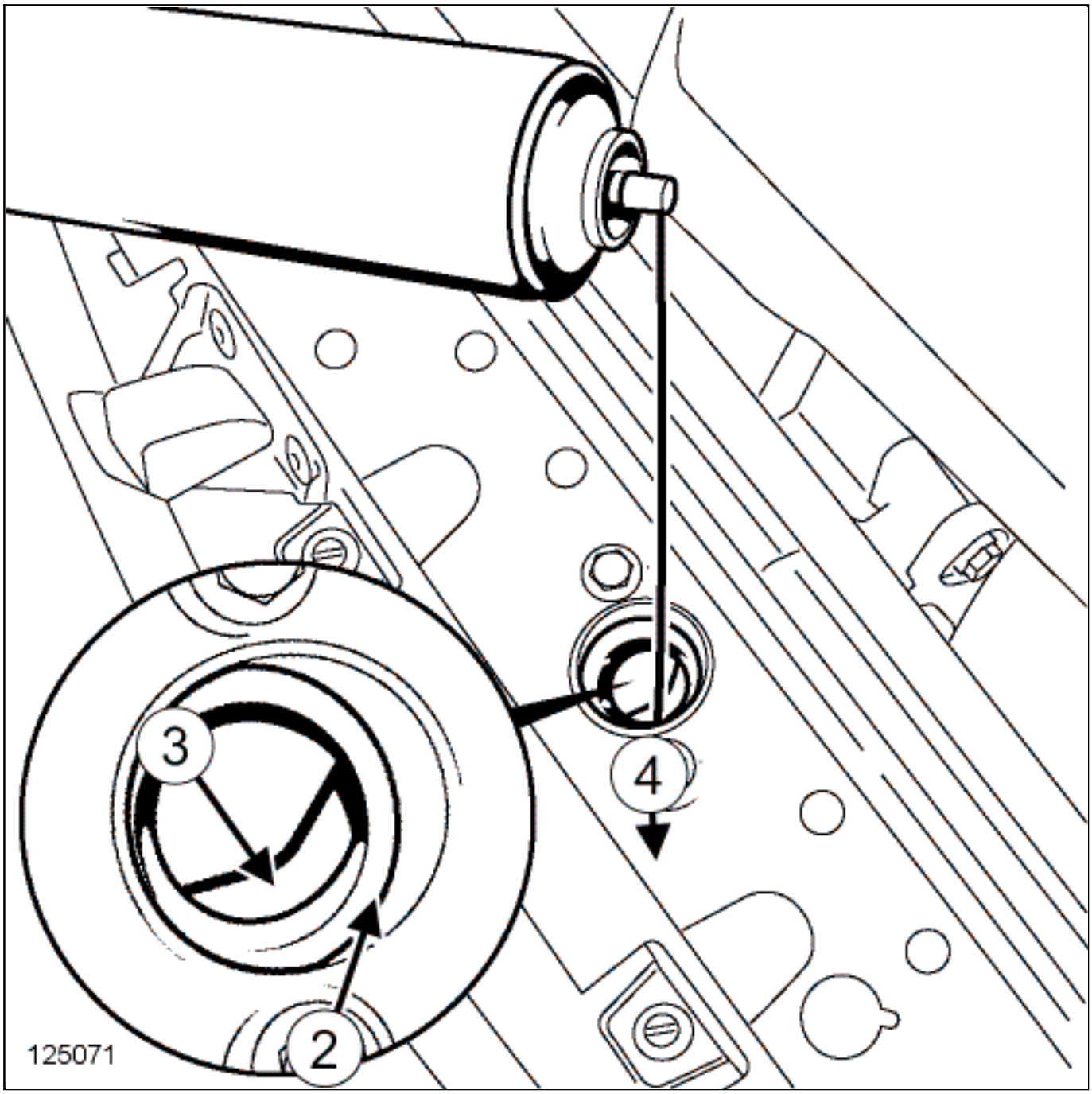

As specified in the photo above, apply silicone-free lubricant[Vehicle: Parts and consumables for the repair](04B, Consumables - Products), placing it between the body of the lock (2) and the lock blade (3) in the direction of the lock blade hinge shaft (4).

Let it set for1 minute, then manoeuvre 10 times from the bonnet release catch in the passenger compartment.

2)OTHER TYPES OF LOCK

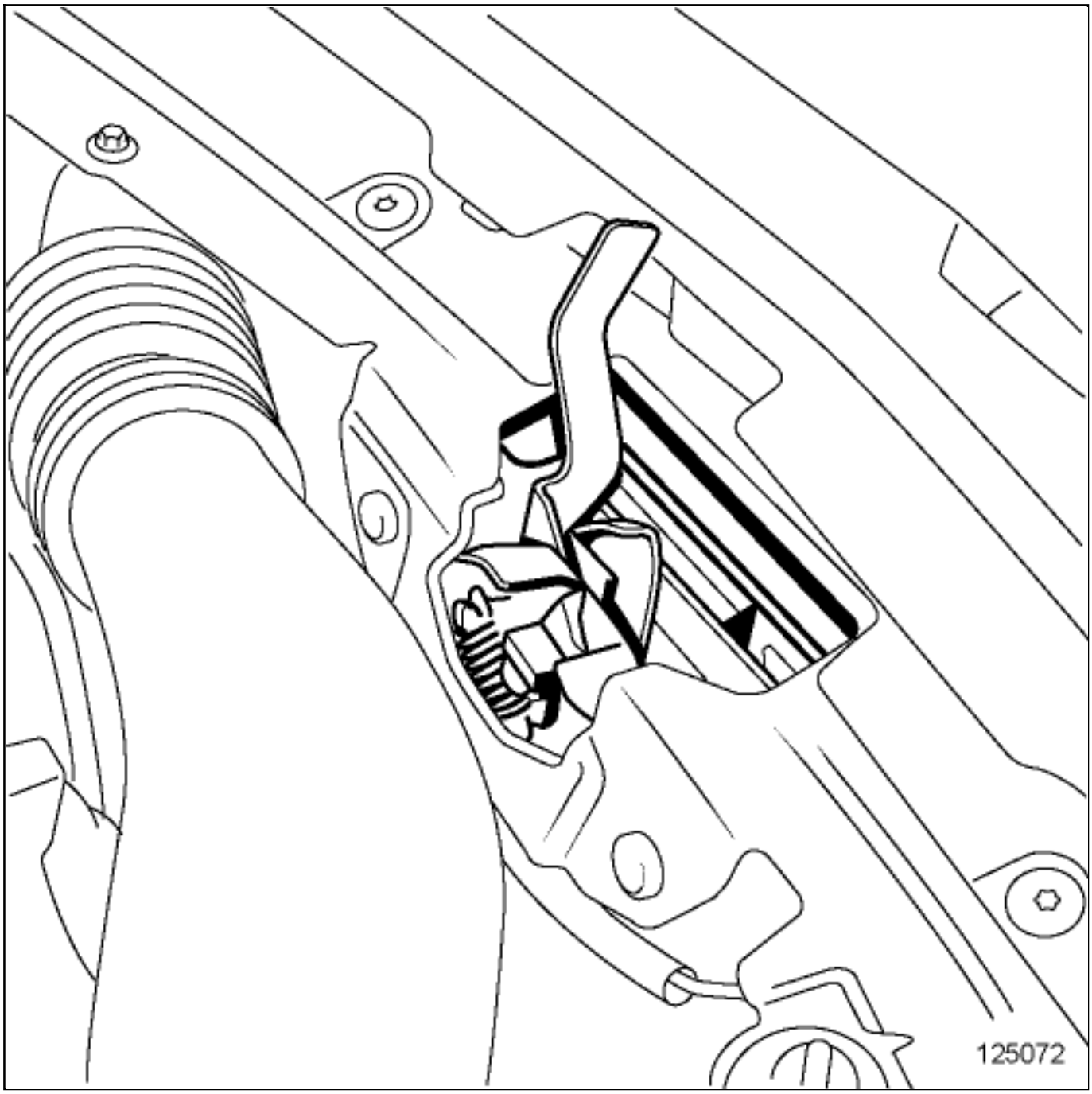

Apply silicone-free lubricant[Vehicle: Parts and consumables for the repair](04B, Consumables - Products) to the catch assembly.

Let it set for1 minute, then manoeuvre 10 times from the bonnet release catch in the passenger compartment.

4- GREASING OF THE REAR DOOR HINGES AND THE UPPER STRIKER PANEL HOOK OF THE SLIDING SIDE DOOR(MASTER II PHASE 3)

Apply opening element greaseto the rear door hinges and the upper striker panel hook of the sliding side door (see **Vehicle: Parts and consumables for the repair**)

5- ENGINE: DRAINING THE ENGINE OIL

The oil grade is essential for maintaining the service life of the engine. Carefully follow the manufacturer's recommendations specified in the Technical NoteEngine oil: Specifications (Technical Note 6013A, 04A, Lubricants).

Use the correct quantity of oil and the correct sump plug sealing washerEngine oil: Draining - Refilling (10A, Engine and peripherals).

After topping up, let the oil run for approximately 10 minutes before checking the level. The oil level maximum mark on the dipstick must never be exceeded (risk of damage to the engine).

6- ENGINE: REPLACING THE OIL FILTER

Replace the engine oil filter after each oil serviceOil filter: Removal - Refitting (10A, Engine and peripherals).

7- ENGINE: CHECKING THE EXHAUST SYSTEM

- Visually inspect:
  - that there is no corrosion, piercing or impact to the silencer, expansion chamber, catalytic converter and particle filter*,
  - that the rubber mounting bushes are not torn or cracked,
  - that the exhaust pipe is not in contact with the underside of the vehicle.

8- ENGINE: BLEEDING WATER FROM THE FUEL FILTER* (IF THE PART HAS NOT REACHED ITS REPLACEMENT INTERVAL)

Bleed the water from the fuel filter by unscrewing the water bleed cap and letting the water run into a suitable container.

9- ENGINE: CHECKING THE CLUTCH PLAY* FOR LOGAN-SANDERO (EXCEPT FOR AUTOMATIC COMPENSATION)

(Logan and Sandero only) Use the recommended checking procedureClutch control: Adjustment (37A, Mechanical component controls).

10- CHECKING THE LEVELS, CONDITION AND SEALING OF THE HYDRAULIC CIRCUITS: HYDRAULIC POWER-ASSISTED STEERING*

Check the hydraulic steering fluid level: it should be between the minimum and maximum level on the reservoir.

Visually check the sealing, ensuring that there are no leaks, or any abnormal loss of fluid.

Top up, if necessary.

11- CHECKING THE LEVEL, CONDITION AND SEALING OF THE HYDRAULIC CIRCUITS: COOLING

Check the coolant level: it should be between the minimum and maximum level on the reservoir.

Visually check the circuit sealing, ensuring that there are no leaks, or any abnormal loss of fluid.

Top up, if necessary.

12- CHECKING THE LEVEL, CONDITION AND SEALING OF THE HYDRAULIC CIRCUITS: HYDRAULIC BRAKE/CLUTCH*

Visually check the circuit sealing, checking the condition and that there are no leaks around the engine compartment, under the vehicle or at the unions.

- Check the brake fluid level:
  - If the level is between the minimum and maximum, do not add brake fluid as wear on the discs, pads, drums and linings leads to a progressive drop in the brake fluid level in the tank which will usually be rectified once these components are replaced. However, the brake fluid level should never drop below the minimum mark.
  - If there is an abnormal loss of fluid, the cause of which cannot be found with this check, advise the customer.

13- CHECKING THE LEVEL, CONDITION AND SEALING OF THE HYDRAULIC CIRCUITS: SEQUENTIAL GEARBOX HYDRAULIC UNIT*

Check the hydraulic unit oil level: it should be between the minimum and maximum level on the reservoir.

Visually check the sealing, ensuring that there are no leaks, or any abnormal loss of fluid.

Top up, if necessary.

14- CHECKING THE LEVEL, CONDITION AND SEALING OF THE HYDRAULIC CIRCUITS: SEQUENTIAL GEARBOX HYDRAULIC CLUTCH*

Check the hydraulic clutch fluid level, it should be at the middle level of the reservoir.

Visually check the sealing, ensuring that there are no leaks, or any abnormal loss of fluid.

Top up, if necessary.

15- CHECKING THE CHASSIS: CONDITION OF THE GAITERS, RUBBER MOUNTING BUSHES AND BALL JOINTS

Check the condition of the driveshaft and steering rubber gaiters, all ball joints and the rubber mounting bushes. There must not be any signs of tearing or cracks.

16- CHECKING THE CHASSIS: TYRE CONDITION AND PRESSURE (INCLUDING EMERGENCY SPARE WHEEL OR PRESENCE OF TYRE-REPAIR AEROSOL)

Check that the tread depth of the tyres has not reached the wear warning strips, explain the degree of tyre wear to the customer.

Check that there is no abnormal tyre wear, and no bulges, blisters, tears or foreign objects (sharp object, screw, etc.).

Check and readjust the tyre inflation pressure when cold according to the type of driving.

Check the pressure and condition of the emergency spare wheel, or if not supplied with the vehicle, check that there is a tyre repair aerosol in the vehicle.

Respect the recommended pressure shown on the label on the door (if the vehicle does not have one, refer to the Driver's Handbook or.

17- CHECKING THE CHASSIS: PRESENCE OF THE WHEEL VALVE CAPS

Check that each valve cap is present.

18- CHECKING THE CHASSIS: SEALING OF THE FRONT AND REAR SHOCK ABSORBERS

Visually check that there is no oil leaking along the length of the shock absorbers.

19- CHECKING THE CHASSIS: WEAR OF THE FRONT AND REAR BRAKE PADS AND BRAKE DISCS*, AND SWAPPING THE FRONT AND REAR WHEELS

In order to perform a quality check, always remove the wheels (an electric impact wrench or a pneumatic wrench can be used to loosen the wheel bolts and nuts).

Check the thickness of the brake pads and compare to the minimum authorised value. In case of partial wear, advise the customer of the degree of wear to the brake pads.

Check the thickness of the front brake discs and the thickness of the rear brake discs and compare to the minimum authorised value. In case of partial wear, advise the customer of the degree of wear to the brake discs.

Refit the wheels. For Duster 4X4, swap the front and rear wheels.

When refitting the wheels, an electric impact wrench set at low speed can be used to fit the wheel bolts and nuts until contact, then torque tighten them.

20- CHECKING VISIBILITY: EXTERIOR LIGHTING AND SIGNALS

Check the side lights, dipped headlights, main beam headlights, front and rear fog lights, the direction

indicators and side mounted indicators, the reversing lights, the hazard warning lights, the brake lights, the registration plate lighting and the additional cornering lights*.

21- CHECKING VISIBILITY: INTERIOR LIGHTING

Checking door lighting, interior lights and sun visors, glovebox and luggage compartment lights.

22- CHECKING VISIBILITY: CONDITION OF THE WINDSCREEN AND DOOR MIRRORS

Check that there are no cracks or chips.

23- CHECKING VISIBILITY: WEAR ON THE FRONT AND REAR WINDSCREEN WIPER BLADES

Check the quality of the wiping function and check that the wiper blades are not torn or cracked.

24- CHECKING VISIBILITY: FRONT AND REAR WINDSCREEN WASHER FLUID LEVEL

Check that there is windscreen washer fluid present.

Top up, if necessary.

25- LABELS: CHECKING THE AIRBAG SAFETY AND ENGINE COMPARTMENT LABELS ARE PRESENT AND CORRECTLY POSITIONED

❑ Check that the vehicle has the following original safety labels:

- airbag, located on the windscreen, sun visor and passenger side of the dashboard,
- battery, oil, cooling system, heating and air conditioning system, engine cooling fan located in the engine compartment.

26- ELECTRONIC CHECK: BATTERY

Check the condition of the battery with the tool "Midtronics R330".

27- ELECTRONIC CHECK: COMPUTERS

Note:

Always check the condition of the battery before checking the computers as insufficient voltage can affect the computers.

The purpose of this procedure is to see if any of the computers are faulty.

- The following tools are essential for carrying out fault finding on these systems:
  - an approved Renault Electronic check tool(QUEST) with the latest update,
  - an approved Renault Diagnostic tool(CLIP) with the latest update,
  - a CAN probe.

Running fault finding on the computers highlights possible faults not displayed by the system self-test procedure, and allows them to be analysed and deleted

28- CHECKING CHARGING CORD (ONLY TWIZY):

Visually check the charging cord without removing.

29- CHECKING ELECTRIC VEHICLE (ONLY KANGOO AND FLUENCE):

Electronic check :

Select the symptome in MCS (Modulate Targeting Symptome): R201, integrate it into the order of repair.

Make a electronic check of computers, see "Electronic check : computers".

Make the checks of symptome R201: "Maintenance Range".

NB :

Do not control the system Quick Dropbecause it is canceled.

30- ELECTRONIC FAULT FINDING: OPERATION OF THE INSTRUMENT PANEL WARNING LIGHTS

Check that the following warning lights come on when the ignition is switched on:

- STOP warning light,
- SERVICE warning light.

31- REINITIALISATION: MAINTENANCE/OIL SERVICE DISPLAY*

Reset the maintenance/oil service interval display (see Driver's Handbook).

32- SERVICE SHEETS: AFFIXING THE SERVICE LABEL IN THE ENGINE COMPARTMENT*

Fill in the maintenance label and affix it in the engine compartment.

5. SUPPLEMENTARY OPERATIONS:

The removal and refitting procedures and some of the checks to be carried out during maintenance are set out in the repair manuals or the technical notes. The information and repair methods given below are specific to the maintenance programme.

For an exhaustive description of the operations to be carried out during the maintenance operation, refer to the vehicle maintenance booklet.

1- REPLACEMENT OF THE ACCESSORIES BELT, ROLLERS, AND PULLEYS (PULLEY TO BE REPLACED DEPENDING ON THE VEHICLE)

When replacing the belt, it is essential to replace the tensioning rollers and fixed rollers across the whole range. It is also necessary to replace the damper pulley (also known as the crankshaft accessories pulley) or the alternator pulley on certain engines, see below.

Table of pulleys to be replaced during maintenance only according to the accessories belt replacement frequency. The vehicles concerned are those for which the maintenance booklets mention a replacement for certain engines. The detail of the vehicle variants concerned is given below (vehicles manufactured after June 2006):

1)FOR GERMANY, ANDORRA, AUSTRIA, BELGIUM, DENMARK, SPAIN, ESTONIA, FINLAND, FRANCE, GREAT BRITAIN, GREECE, HUNGARY, IRELAND, ICELAND, ITALY, LATVIA, LIECHTENSTEIN, LITHUANIA, LUXEMBOURG, NORWAY, NETHERLANDS, POLAND, PORTUGAL, CZECH REPUBLIC, SLOVAKIA, SLOVENIA, SWEDEN, SWITZERLAND, CROATIA, ISRAEL:

RECOMMENDATIONS FOR REPLACING THE DAMPER PULLEY (CRANKSHAFT ACCESSORIES PULLEY):

Engine type	Engine suffix	Recommendation for replacing the damper pulley during maintenance operations
F4R	714, 715, 720, 760, 761, 762, 763, 764, 765, 766, 767, 770, 771, 774, 776, 784, 786, 787, 792, 794, 795, 796, 797, 800, 811, 820, 830, 867, 870, 886, 887, 896, 897.	To be replaced each time the accessories belt and its rollers are scheduled for replacement
F9Q	260, 262, 264, 660, 664, 670, 674, 680, 755, 757, 758, 759, 800, 803, 804, 808, 812, 814, 816, 818, 820.	
M9R	610, 700, 720, 721, 722, 740, 760, 761, 780, 812.	
G9T equipped with air conditioning	600 ,605, 606, 607, 642, 645, 702, 703, 706, 707, 710, 712, 720, 722, 742, 743, 750.	
G9U equipped with air conditioning	630, 632, 650, 720, 724, 730, 750, 754.	
V9X	All	

RECOMMENDATIONS FOR REPLACING THE ALTERNATOR PULLEY:

Engine type	Engine suffix	Recommendations for replacing the alternator pulley during maintenance
F4R	802, 813.	To be replaced each time the accessories belt and its rollers are scheduled for replacement

2)OTHER COUNTRIES:

RECOMMENDATIONS FOR REPLACING THE DAMPER PULLEY (CRANKSHAFT ACCESSORIES PULLEY):

Engine type	Engine suffix	Recommendation for replacing the damper pulley
K4J equipped with air conditioning	730, 732, 740, 770, 780.	To be replaced each time the accessories belt and its rollers are scheduled for replacement
K4M equipped with air conditioning	604, 606, 680, 690, 694, 696, 697, 698, 716, 744, 745, 760, 761, 762, 764, 766, 768, 770, 780, 782, 788, 790, 791, 794, 800, 801, 804, 812, 813, 814, 824, 830, 831, 834, 835, 844, 854, 856, 862, 866.	
K4M equipped with air conditioning	838, 839, 848, 858	To be replaced every other time the accessories belt and its rollers are scheduled for replacement
K9K	782	

F4R	714, 715, 720, 760, 761, 762, 763, 764, 765, 766, 767, 770, 771, 774, 776, 784, 786, 787, 792, 794, 795, 796, 797, 800, 811, 820, 830, 867, 870, 886, 887, 896, 897.	To be replaced each time the accessories belt and its rollers are scheduled for replacement
K9K	278, 282, 288, 292, 732, 734, 764, 772, 780, 804, 806, 832, 836.	
F9Q	260, 262, 264, 660, 664, 670, 674, 680, 755, 757, 758, 759, 794, 800, 803, 804, 808, 812, 814, 816, 818, 820.	
G9T equipped with air conditioning	600 ,605, 606, 607, 642, 645, 702, 703, 706, 707, 710, 712, 720, 722, 742, 743, 750.	
G9U equipped with air conditioning	630, 632, 650, 720, 724, 730, 750, 754.	
M9R	610, 700, 720, 721, 722, 740, 742, 760, 761, 780, 812.	
V9X	All	
M9R	802, 803, 805, 809, 816, 830, 832, 833.	To be replaced every other time the accessories belt and its rollers are scheduled for replacement
M9T	All	To be replaced every other time the accessories belt and its rollers are scheduled for replacement

RECOMMENDATIONS FOR REPLACING THE ALTERNATOR PULLEY:

Engine type	Engine suffix	Recommendations for replacing the alternator pulley during maintenance
F4R	802, 813	To be replaced each time the accessories belt and its rollers are scheduled for replacement

2- REPLACING THE TIMING BELT AND ROLLERS

When replacing the belt, it is essential to replace the tensioning and fixed rollers across the whole range. Certain vehicle/engine specifications require associated parts to be replaced, therefore it is necessary to consult the repair procedure for the vehicle and engine for further details.

3- CHECKING THE REAR BRAKE LININGS FOR VEHICLES FITTED WITH DRUMS

Check the wheel cylinders for any possible leaks.

Remove any dust from the brake linings using a brake cleaning product.

Check the thickness of the drum linings and compare it to the minimum authorised thickness..

4- CLEANING THE AIR CONDITIONING SYSTEM

The air conditioning system is cleaned by cleaning the evaporator.

6. STANDARD OF PROFESSIONAL ACTIVITY

The Standard of Professional Activity is a tool which describes the operation to perform in an optimised order favouring time and quality. This way of working allows for the elimination and reduction of unnecessary actions, the grouping together of operations by operation area and a reduction in down time.

Order of performance	Principal steps	Key points
Preparing the vehicle:		
1	Consult the repair order and ICM editions to find out:- The works to be performed and additional operations- The presence of OTS	
2	Check that the driver's protections are in place (front seat, steering wheel, floor carpet, gear lever)	
3	Check for the maintenance booklet and the wheel anti-theft key (if equipped) on the passenger seat	
4	Check the instrument panel warning lights with the ignition on	Warning light (STOP and SERVICE)
5	Start the vehicle and check that all the warning lights go out	No warning light lit
6	Move the vehicle to the workstation, leave the engine running	
Passenger compartment checks:		
7	Step out of the vehicle and connect the exhaust gas extraction system	

8	❑ Check the exterior signals and lights: ■ Side lights, ■ Dipped headlights, ■ Main beam headlights, ■ Front and rear fog lights, ■ direction indicators and side mounted indicators, ■ Front and rear hazard warning lights, ■ Brake lights, ■ number plate lighting, ■ Reversing lights, ■ Additional cornering lights,	Use a mirror If not done whilst walking around the vehicle
9	❑ Check the interior lighting: ■ Courtesy lights, ■ Sun visors, ■ Glovebox.	
10	Release the bonnet, and remove the diagnostic socket cover	
11	Reset the distance before oil change/maintenance display	
12	Switch off the engine and switch on the ignition again	
13	Step out of the vehicle, take the wheel anti-theft key	
Front visibility check:		
14	Check the condition of the windscreen wiper blades	
15	Check the condition of the windscreen	
Engine compartment checks:		
16	Open the bonnet	

17	Run fault finding on the battery with the "MIDTRONICS R330" tool.	
18	Grease the bonnet catch using silicone-free lubricant	
19	Go back into the passenger compartment, switch on the ignition and connect the Diagnostic tool "Clip" or Electronic check tool "Quest" and run the computer scan	
20	Release the bonnet 10 times using the control in the driver's position	
21	Check the levels and sealing of the hydraulic circuits in the engine compartment: ■ the coolant circuit, ■ of the hydraulic power-assisted steering circuit (depending on the version), ■ of the brake fluid and clutch circuit (depending on the version), ■ hydraulic unit of the sequential gearbox (depending on the version).	Do not top up the brake fluid level
22	Check the washer fluid level.	
23	Remove the oil filler cap	
24	Loosen the oil filter if accessible from above.	
25	Check the clutch clearance (Logan version)	
26	Bleed the water from the fuel filter (if accessible)	Bleed the fuel filter if it has not reached its replacement interval

27	Check for the presence of the "Manufacturer's Recommendations" label located in the engine compartment	The "manufacturer's recommendations" labels include: oil, battery, cooling circuit, fan, air conditioning.
Check the condition of the bodywork on the driver's side:		
28	Check the lighting of the front door sill	
29	Read and retain the tyre pressure	
30	Check the condition of the rear view mirror	
31	Visually inspect the condition of the bodywork	
32	Check the lighting of the rear door sill (if equipped)	
33	Position the arms or pads of the lift (depending on the type of lift)	
34	Take the pressure gauge (if it is not present in the kit)	
Rear vehicle checks:		
35	Check the lighting of the luggage compartment	
36	Check the level of wear of the emergency spare wheel (if accessible through the luggage compartment)	
37	Check the pressure and the presence of the valve cap	

38	Check the condition of the rear screen wiper blade	
Check the condition of the bodywork on the passenger's side:		
39	Visually inspect the condition of the bodywork	
40	Check the lighting of the rear door sill	
41	Check the lighting of the front door sill	
42	Check the presence of the airbag label on the passenger's side	
43	Check the condition of the rear view mirror	
44	Position the arms or pads of the lift (depending on the type of lift)	
Computer checks		
45	Record the scan results of Diagnostic tool "Clip" or Electronic check tool"Quest"	
46	Disconnect the Diagnostic tool"Clip" or Electronic check tool "quest"	
Panoramic sunroof check		
47	Clean the arms of the sunroof deflector and the section of the mobile panel which comes into contact with them (if equipped)	
48	Raise the vehicle to chest height	

Check on driver's side front wheel		
49	Check the level of wear of the tyre + presence of foreign bodies (blisters, tears, foreign objects)	
50	Remove the wheel	Wheel: Removal - Refitting (35A, Wheels and tyres)
51	Check the level of brake pad wear	Note the degree of wear on the test certificate
52	Check the brake disc wear	
53	Check the condition of the brake hose	
54	Check the condition of the rubber mounting bushes and suspension arm ball joint	
55	Check the sealing of the shock absorber	
56	Check for corrosion on wheel arch, the condition of the spring, shock absorber cups and shock absorber	
57	Check the condition of the driveshaft gaiters and steering gaiters	
58	Check the level of power-assisted steering fluid (Laguna 3)	
Check on driver's side rear wheel:		
59	Check the level of wear of the tyre + presence of foreign bodies (blisters, tears, foreign objects)	

60	Remove the wheel	Wheel: Removal - Refitting (35A, Wheels and tyres)
61	Check the level of wear of the brake pads, depending on the version	Note the degree of wear on the test certificate
62	Check the brake disc wear (if equipped)	
63	Check the condition of the brake hose	
64	Check the sealing of the shock absorber.	
65	Check for corrosion on wheel arch, the condition of the spring, shock absorber cups and shock absorber	
Check on passenger's side rear wheel:		
66	Check the level of wear of the tyre + presence of foreign bodies (blisters, tears, foreign objects)	
67	Remove the wheel	Wheel: Removal - Refitting (35A, Wheels and tyres)
68	Check the level of wear of the brake pads, depending on the version	Note the degree of wear on the test certificate
69	Check the brake disc wear (if equipped)	
70	Check the condition of the brake hose	
71	Check the sealing of the shock absorber.	

72	Check for corrosion on wheel arch, the condition of the spring, shock absorber cups and shock absorber	
Check on passenger's side front wheel		
73	Check the level of wear of the tyre + presence of foreign bodies (blisters, tears, foreign objects)	
74	Remove the wheel	Wheel: Removal - Refitting (35A, Wheels and tyres)
75	Check the level of brake pad wear	Note the degree of wear on the test certificate
76	Check the brake disc wear	
77	Check the condition of the brake hose	
78	Check the condition of the rubber mounting bushes and suspension arm ball joint	
79	Check the sealing of the shock absorbers.	
80	Check for corrosion on wheel arch, the condition of the spring, shock absorber cups and shock absorber	
81	Check the condition of the driveshaft gaiters and steering gaiters	
82	Bleed the water in the fuel filter (if accessible through wheel arch) according to the maintenance programme)	

83	Raise the vehicle to the upper position	
Underbody operations		
84	Remove the protection plate underneath the engine and position the oil collector	
85	Remove the drain plug	Let the oil flow for 10 minutes
86	Remove the oil filter (version accessed from underneath)	
87	Check the exhaust system: Corrosion, contact with body and condition of the rubber mounting bushes	
88	Check the condition of the catalytic converter	
89	Check the condition of the spring, shock absorber cups and shock absorber on the right-hand and left-hand sides (if accessible from underneath)	
90	Check the condition of the underbody brake pipes	
91	Check the condition and pressure of the emergency spare wheel (if accessible from underneath)	
92	❑ Check the engine components using a lamp: ■ Cooling system hoses, ■ Coolant pump, ■ Engine block, ■ Turbocharger	

93	Parts are supplied using Dialogys and the physical values should be noted (tightening torque, oil grade and quantity)	
94	Refit the new oil filter (if accessible)	Lubricate the seal, tighten to torque depending on the model
95	Refit the drain plug	With new seal and according to recommended part number, for copper seals, the lips should be on the plug side (panel cover) Torque tighten depending on the model
96	Clean the oil residues	
97	Drain the oil collector.	
	Supplementary operation: replacement of fuel filter	See ICM/Maintenance booklet
98	Refit the protection plate underneath the engine	
99	Read the tyre pressure on the label on the driver's side door (if equipped)	Pressure to be applied depends on customer's driving type
100	Lower the vehicle to chest height	
Operations on driver's side front wheel		
101	Refit the wheel	**Wheel: Removal - Refitting** (35A, Wheels and tyres)

102	Check the tyre pressure and the presence of the valve cap	
Operations on driver's side rear wheel		
	Supplementary operation: remove dust and check the drum brake (if equipped)	See ICM/Maintenance booklet
103	Refit the wheel	Wheel: Removal - Refitting (35A, Wheels and tyres)
104	Check the tyre pressures and the presence of the valve cap	
Operations on passenger's side rear wheel		
	Supplementary operation: remove dust and check the drum brake (if equipped)	See ICM/Maintenance booklet
105	Refit the wheel	Wheel: Removal - Refitting (35A, Wheels and tyres)
106	Check the tyre pressures and the presence of the valve cap	
Operations on passenger's side front wheel		
	Remove - refit diesel filter (depending on the version)	See ICM/Maintenance booklet
107	Refit the wheel	Wheel: Removal - Refitting (35A, Wheels and tyres)

108	Check the tyre pressures and the presence of the valve cap	
109	Lower the vehicle to the low position	
Operations in the engine compartment		
110	Refit the new oil filter (if accessible)	Lubricate the seal, tighten by hand or to torque depending on the model
111	Fill the engine oil	Respect the grade and quantity of engine oil.
112	Replace the oil filler cap	
	Supplementary operation: replacement of diesel filter (depending on the version)	See ICM/Maintenance booklet
	Supplementary operation: replacement of fuel filter (depending on the version)	See ICM/Maintenance booklet
	Supplementary operation: replacement of air filter	See ICM/Maintenance booklet
	Supplementary operation: replacement of spark plugs	See ICM/Maintenance booklet
	Supplementary operation: replacement of brake fluid	See ICM/Maintenance booklet
	Supplementary operation: replacement of coolant	See ICM/Maintenance booklet
	Supplementary operation: replacement of accessories belt and rollers	See ICM/Maintenance booklet

	Supplementary operation: replacement of damper pulley/alternator pulley (depending on the version)	See Technical Note 6018/Maintenance booklet
	Supplementary operation: replacement of timing belt and rollers	See ICM/Maintenance booklet
	Supplementary operation: check and clean air conditioning system	See ICM/Maintenance booklet
	Supplementary operation: replacement of cabin filter (depending on the version)	See ICM/Maintenance booklet
Internal vehicle operation		
113	Start the vehicle	
114	Switch off the ignition	
	Supplementary operation: replacement of cabin filter (depending on the version)	See ICM/Maintenance booklet
Wheel torque tightening		
115	Consult the tightening torque in the technical documentation	
116	Torque tighten the front wheel on the driver's side and refit the trim (if equipped)	Refitting the trim confirms the tightening operation.
117	Torque tighten the rear wheel on the driver's side and refit the trim (if equipped)	Refitting the trim confirms the tightening operation.
118	Torque tighten the rear wheel on the passenger's side and refit the trim (if equipped)	Refitting the trim confirms the tightening operation.

119	Torque tighten the front wheel on the passenger's side and refit the trim (if equipped)	Refitting the trim confirms the tightening operation.
Administrative operations		
120	Fill in the test certificate	
121	Indicate, according to the degree of importance, the next works to be performed in order to ensure vehicle conformity.	
Final inspection in the engine compartment:		
122	Fill in and position the maintenance label	
123	After waiting at least 10 minutes after the last top-up or starting the engine, check the oil level using the dipstick	
124	Top up if necessary	
125	Clean the engine cover and the battery cover	

MAINTENANCEVALUES:DESCRIPTION

1. CHASSIS MAINTENANCE SUMMARY

WHEELS	Tightening torque	75 N.m

FOR THE FOLLOWING COUNTRIES: GERMANY, ANDORRA, AUSTRIA, BELGIUM, DENMARK, SPAIN, ESTONIA, FINLAND, FRANCE, GREAT BRITAIN, GREECE, HUNGARY, IRELAND, ICELAND, ITALY, LATVIA, LIECHTENSTEIN, LITHUANIA, LUXEMBOURG, NORWAY, NETHERLANDS, POLAND, PORTUGAL, CZECH REPUBLIC, SLOVAKIA, SLOVENIA, SWEDEN, SWITZERLAND, CROATIA, ISRAEL

BRAKE FLUID	Brake fluid grade	DOT 4, ISO CLASS 6, RENAULT Standard: 03-50-006

FOR OTHER COUNTRIES

BRAKE FLUID	Brake fluid grade	DOT 4, ISO CLASS 6, RENAULT Standard: 03-50-006 DOT 4, ISO CLASS 4, RENAULT Standard: 03-50-005

FRONT BRAKES

Tightening torques	Front guide pin bolts	17 N.m
	Front calliper support bolts	25 N.m
Measurement	Front disc diameter	214 mm
	Minimum front brake disc thickness	4 mm
	Minimum front brake pad thickness	1.4 mm

REAR BRAKES

Tightening torques	Rear guide pin bolts	17 N.m
	Rear calliper support bolts	25 N.m
Measurement	Rear disc diameter	204 mm
	Minimum rear brake disc thickness	4 mm
	Minimum rear brake pad thickness	1.1 mm

Repair-00x01x01x27-02x21-2-87-1.xml

XSL version : 3.02 du 22/07/11

MASTER CYLINDER - FRONT LEFT-HAND CALLIPER BRAKE PIPE: REMOVAL - REFITTING

Note, one or more warnings are present in this procedure

Equipment required
Diagnostic tool

WARNING

To avoid all risk of damage to the systems, apply the safety and cleanliness instructions and operation recommendations before carrying out any repair:

- Brake circuit: Precautions for the repair ,
- Vehicle: Precautions for the repair .

Location and specifications (tightening torques, parts always to be replaced, etc.)(see 37A, Mechanical component controls, Braking control assembly: Exploded view) .

REMOVAL

1. REMOVAL PREPARATION OPERATION

Position the vehicle on a two post lift Vehicle: Towing and lifting .

Lock the airbag computer using the Diagnostic tool(see Fault finding - Replacement of components) (88C, Airbags and pretensioners).

Position the handbrake on the third notching.

WARNING

DANGER : Risk of serious injuries due to the short-circuiting or the untimely triggering of an electrical system (pyrotechnical parts, windscreen wiper motor, electric fan, etc.) following possible loopback of the 12-volt supply circuit by the voltage transformer.

Please adhere to the instructions regarding cut-off of the 12-volt supply circuit.

If the procedure fails, do not continue with your task and ask an employee who is qualified and authorized to work on a high-voltage onboard network to perform a diagnostic Vehicle: Precautions for the repair .

- Lockout the 12V supply circuit12 V supply circuit : Lockout - Removal of lockout .

- Remove the front bumper upper stripExterior body front trim assembly: Exploded view .

- Remove the A-pillar trimsExterior body side trim assembly: Exploded view .

- Remove Exterior body front trim assembly: Exploded view :
  - the front bumper lower trim,
  - the front bumper trim.

- Remove Exterior body side trim assembly: Exploded view :
  - the B-pillar trims,
  - the body side trims,
  - the roof front section trims,

- the windscreen side windows,
- the left-hand sill panel extension,
- the front left-hand wheel arch liner.

Remove:

- the front end panel[Exterior body front trim assembly: Exploded view] ,
- the dashboard[Dashboard assembly: Exploded view] .

2. REMOVAL OPERATION

Loosen:

- the front left-hand rigid brake pipe nut on the master cylinder[(see 37A, Mechanical component controls, Braking control assembly: Exploded view)] ,
- the front left-hand rigid brake pipe union on the left-hand brake hose[Front brake calliper assembly: Exploded view] .

CAUTION

Prepare for the flow of fluid, and protect the surrounding components.

Fit blanking plugs.

Unclip and remove the front left-hand rigid brake pipe.

REFITTING

1. REFITTING PREPARATION OPERATION

1- IN THE EVENT OF REPLACEMENT

- Bend the pipe Rigid brake pipe: Repair .

2. REFITTING OPERATION

- Proceed in the reverse order to removal.

3. FINAL OPERATION

- Fill up and bleed the brake circuit Braking circuit: Bleed .
- Remove the lockout of the 12V supply circuit 12 V supply circuit : Lockout - Removal of lockout .
- Unlock the airbag computer using the Diagnostic tool(see Fault finding - Replacement of components) (88C, Airbags and pretensioners).

Repair-13x03x01x14-01x37-1-4-1.xml

XSL version : 3.02 du 22/07/11

MASTER CYLINDER - FRONT RIGHT-HAND CALLIPER BRAKE PIPE: REMOVAL - REFITTING

Note, one or more warnings are present in this procedure

Equipment required
Diagnostic tool

WARNING

To avoid all risk of damage to the systems, apply the safety and cleanliness instructions and operation recommendations before carrying out any repair:

- Brake circuit: Precautions for the repair ,
- Vehicle: Precautions for the repair .

Location and specifications (tightening torques, parts always to be replaced, etc.)(see 37A, Mechanical component controls, Braking control assembly: Exploded view) .

REMOVAL

1. REMOVAL PREPARATION OPERATION

Position the vehicle on a two post lift Vehicle: Towing and lifting .

Lock the airbag computer using the Diagnostic tool(see Fault finding - Replacement of components) (88C, Airbags and pretensioners).

Position the handbrake on the third notching.

WARNING

DANGER : Risk of serious injuries due to the short-circuiting or the untimely triggering of an electrical system (pyrotechnical parts, windscreen wiper motor, electric fan, etc.) following possible loopback of the 12-volt supply circuit by the voltage transformer.

Please adhere to the instructions regarding cut-off of the 12-volt supply circuit.

If the procedure fails, do not continue with your task and ask an employee who is qualified and authorized to work on a high-voltage onboard network to perform a diagnostic Vehicle: Precautions for the repair .

- Lockout the 12V supply circuit12 V supply circuit : Lockout - Removal of lockout .

- Remove the front bumper upper stripExterior body front trim assembly: Exploded view .

- Remove the A-pillar trimsExterior body side trim assembly: Exploded view .

- Remove Exterior body front trim assembly: Exploded view :
  - the front bumper lower trim,
  - the front bumper trim.

- Remove Exterior body side trim assembly: Exploded view :
  - the B-pillar trims,
  - the body side trims,
  - the roof front section trims,

- the windscreen side windows,
- the right-hand sill panel extension,
- the front right-hand wheel arch liner.

Remove:

- the front end panel Exterior body front trim assembly: Exploded view ,
- the dashboard Dashboard assembly: Exploded view .

2. REMOVAL OPERATION

Loosen:

- the front right-hand rigid brake pipe nut on the master cylinder (see 37A, Mechanical component controls, Braking control assembly: Exploded view) ,
- the front right-hand rigid brake pipe union on the front right-hand brake hose Front brake calliper assembly: Exploded view .

CAUTION

Prepare for the flow of fluid, and protect the surrounding components.

Fit blanking plugs.

Unclip and remove the front right-hand rigid brake pipe.

REFITTING

1. REFITTING PREPARATION OPERATION

1- IN THE EVENT OF REPLACEMENT

- Bend the pipe Rigid brake pipe: Repair .

2. REFITTING OPERATION

- Proceed in the reverse order to removal.

3. FINAL OPERATION

- Fill up and bleed the brake circuit Braking circuit: Bleed .
- Remove the lockout of the 12V supply circuit 12 V supply circuit : Lockout - Removal of lockout .
- Unlock the airbag computer using the Diagnostic tool(see Fault finding - Replacement of components) (88C, Airbags and pretensioners).

Repair-13x03x01x13-01x37-1-4-1.xml

XSL version : 3.02 du 22/07/11

MASTER CYLINDER - UNDERBODY UNION BRAKE PIPE: REMOVAL - REFITTING

Note, one or more warnings are present in this procedure

Equipment required
Diagnostic tool

WARNING

To avoid all risk of damage to the systems, apply the safety and cleanliness instructions and operation recommendations before carrying out any repair:

- Brake circuit: Precautions for the repair ,
- Vehicle: Precautions for the repair .

Location and specifications (tightening torques, parts always to be replaced, etc.)(see 37A, Mechanical component controls, Braking control assembly: Exploded view) .

REMOVAL

1. REMOVAL PREPARATION OPERATION

Position the vehicle on a two post lift Vehicle: Towing and lifting .

WARNING

To avoid any risk of triggering when working on or near a pyrotechnic component (airbags or pretensioners), lock the airbag computer using the diagnostic tool.

When this function is activated, all the trigger lines are inhibited and the airbag warning light on the instrument panel lights up continuously (ignition on).

❑

Lock the airbag computer using the Diagnostic tool(see Fault finding - Replacement of components) (88C, Airbags and pretensioners).

❑

Position the handbrake on the third notching.

WARNING

DANGER : Risk of serious injuries due to the short-circuiting or the untimely triggering of an electrical system (pyrotechnical parts, windscreen wiper motor, electric fan, etc.) following possible loopback of the 12-volt supply circuit by the voltage transformer.

Please adhere to the instructions regarding cut-off of the 12-volt supply circuit.

If the procedure fails, do not continue with your task and ask an employee who is qualified and authorized to work on a high-voltage onboard network to perform a diagnostic Vehicle: Precautions for the repair .

❑

Lockout the 12V supply circuit12 V supply circuit : Lockout - Removal of lockout .

❑

Remove the front bumper upper stripExterior body front trim assembly: Exploded view .

❑

Remove the A-pillar trimsExterior body side trim assembly: Exploded view .

❑

Remove Exterior body front trim assembly: Exploded view :

- the front bumper lower trim,
- the front bumper trim.

Remove Exterior body side trim assembly: Exploded view :

- the B-pillar trims,
- the body side trims,
- the roof front section trims,
- the windscreen side windows,
- the right-hand sill panel extension,
- the front right-hand wheel arch liner.

Remove:

- the front end panelExterior body front trim assembly: Exploded view ,
- the dashboardDashboard assembly: Exploded view .

2. REMOVAL OPERATION

Loosen (see 37A, Mechanical component controls, Braking control assembly: Exploded view) :

- the rear rigid brake pipe nut on the master cylinder,
- the rear rigid brake pipe nut on the brake compensator.

CAUTION

Prepare for the flow of fluid, and protect the surrounding components.

- Fit blanking plugs.
- Unclip and remove the master cylinder - underbody brake pipe.

REFITTING

1. REFITTING PREPARATION OPERATION

1- IN THE EVENT OF REPLACEMENT

- Bend the pipeRigid brake pipe: Repair .

2. REFFITING OPERATION

- Proceed in the reverse order to removal.

3. FINAL OPERATION

- Fill up and bleed the brake circuitBraking circuit: Bleed .
- Remove the lockout of the 12V supply circuit12 V supply circuit : Lockout - Removal of lockout .
- Unlock the airbag computer using the Diagnostic tool(see Fault finding - Replacement of components) (88C, Airbags and pretensioners).

XSL version : 3.02 du 22/07/11

MASTERCYLINDER:REMOVAL-REFITTING

Note, one or more warnings are present in this procedure

Equipment required
Diagnostic tool

WARNING

- To avoid all risk of damage to the systems, apply the safety and cleanliness instructions and operation recommendations before carrying out any repair:
  - Brake circuit: Precautions for the repair ,
  - Vehicle: Precautions for the repair .

CAUTION

Always replace the master cylinder if it is dropped or in the event of an impact (risk of malfunction).

Location and specifications (tightening torques, parts always to be replaced, etc.)(see 37A, Mechanical component controls, Braking control assembly: Exploded view) .

REMOVAL

1. REMOVAL PREPARATION OPERATION

- Position the vehicle on a two-post liftVehicle: Towing and lifting .

WARNING

To avoid any risk of triggering when working on or near a pyrotechnic component (airbags or pretensioners), lock the airbag computer using the diagnostic tool.

When this function is activated, all the trigger lines are inhibited and the airbag warning light on the instrument panel lights up continuously (ignition on).

❑

Lock the airbag computer using the Diagnostic tool(see Fault finding - Replacement of components) (88C, Airbags and pretensioners).

❑

Position the handbrake on the third notching.

WARNING

DANGER : Risk of serious injuries due to the short-circuiting or the untimely triggering of an electrical system (pyrotechnical parts, windscreen wiper motor, electric fan, etc.) following possible loopback of the 12-volt supply circuit by the voltage transformer.

Please adhere to the instructions regarding cut-off of the 12-volt supply circuit.

If the procedure fails, do not continue with your task and ask an employee who is qualified and authorized to work on a high-voltage onboard network to perform a diagnostic Vehicle: Precautions for the repair .

❑

Lockout the 12V supply circuit12 V supply circuit : Lockout - Removal of lockout .

❑

Remove the front bumper upper stripExterior body front trim assembly: Exploded view .

❑

Remove the A-pillar trimsExterior body side trim assembly: Exploded view .

❑

Remove **Exterior body front trim assembly: Exploded view** :

- the front bumper lower trim,
- the front bumper trim.

Remove **Exterior body side trim assembly: Exploded view** :

- the B-pillar trims,
- the roof front section trims,
- the windscreen side windows.

Remove:

- the front end panel**Exterior body front trim assembly: Exploded view** ,
- the dashboard**Dashboard assembly: Exploded view** .

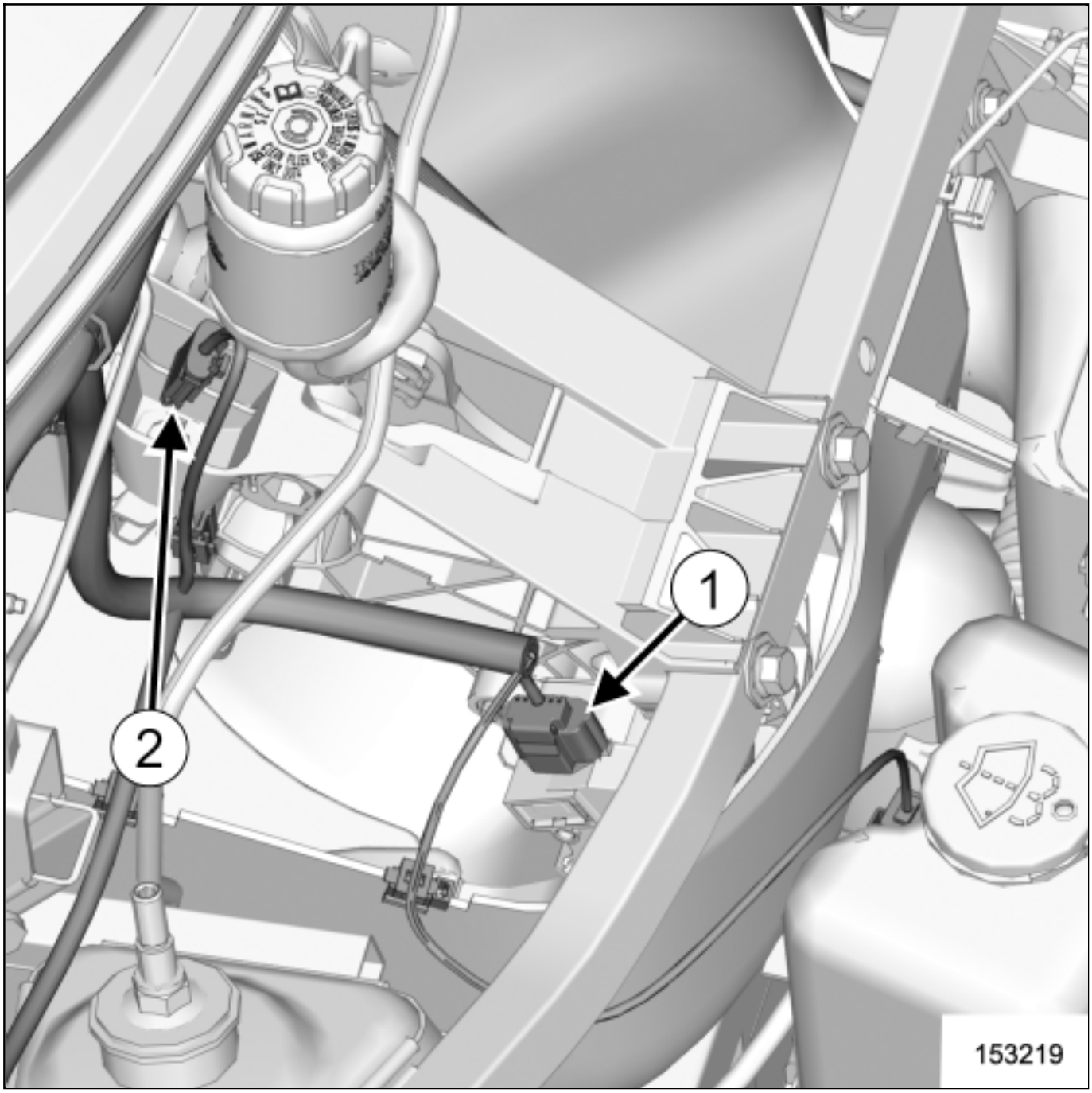

Disconnect:

- the accelerator pedal connector(1) ,
- the brake pedal switch connector(2) .

Remove the rigid brake pipe unions on the master cylinder(see 37A, Mechanical component controls, Braking control assembly: Exploded view) .

CAUTION

Prepare for the flow of fluid, and protect the surrounding components.

❑

Fit blanking plugs.

❑

Remove the pedal mounting plate(see 37A, Mechanical component controls, Pedal assembly: Exploded view) .

2. REMOVAL OPERATION

❑

Disconnect the brake fluid reservoir hose from the master cylinder(see 37A, Mechanical component controls, Braking control assembly: Exploded view) .

❑

Remove (see 37A, Mechanical component controls, Braking control assembly: Exploded view) :

- the master cylinder pin clamp,
- the master cylinder pin,
- the master cylinder bolts,
- the master cylinder.

REFITTING

1. REFITTING OPERATION

❑

Proceed in the reverse order to removal.

2. FINAL OPERATION

- Fill up and bleed the brake circuit Braking circuit: Bleed .

- Remove the lockout of the 12V supply circuit 12 V supply circuit : Lockout - Removal of lockout .

- Unlock the airbag computer using the Diagnostic tool (see Fault finding - Replacement of components) (88C, Airbags and pretensioners).

Repair-13x03x01x09-01x37-1-52-1.xml

XSL version : 3.02 du 22/07/11

MECHANISMHOUSING :REMOVAL-REFITTING

Note, one or more warnings are present in this procedure

Equipment required
safety strap(s)
compressed air nozzle

WARNING

To avoid all risk of damage to the systems, apply the safety and cleanliness instructions and operation recommendations before carrying out any repair:

Vehicle: Precautions for the repair .

Location and specification (tightening torques, parts always to be replaced, etc.)Electric traction reduction gearing assembly: Exploded view .

REMOVAL

1. REMOVAL PREPARATION OPERATION

Position the vehicle on a two-post liftVehicle: Towing and lifting .

WARNING

DANGER: HIGH VOLTAGE VEHICLE.

Risks of serious burns or electric shock that may prove fatal.

Before carrying out any work on the vehicle, it is essential that you adhere to the instructions regarding vehicle voltage cut-off. This work must be carried out by an employee who is qualified and authorized to work on a high-voltage onboard network Vehicle: Precautions for the repair .

Remove:

- the lockout of the vehicle Vehicle: Lockout - Removal of lockout ,
- the rear wheels Wheel: Removal - Refitting ,
- the rear bumper trim Exterior body rear trim assembly: Exploded view .

Blow the traction motor and the reducer with a compressed air nozzle to prevent the introduction of foreign bodies in the motor.

Remove:

- the rear driveshaft Driveshaft assembly: Exploded view ,
- the "lifting eye - wiring support" on the reducer Electric traction reduction gearing assembly: Exploded view .

Strap the traction motor to the body with a safety strap(s).

Remove:

- the left-hand suspended engine mounting Engine-gearbox unit support assembly: Exploded view ,

- the reducer Electric traction reduction gearing assembly: Exploded view ,
- the input shaft lip seal Input shaft lip seal : Removal - Refitting ,
- the differential output seal Differential output seal : Removal - Refitting .

2. REMOVAL OPERATION

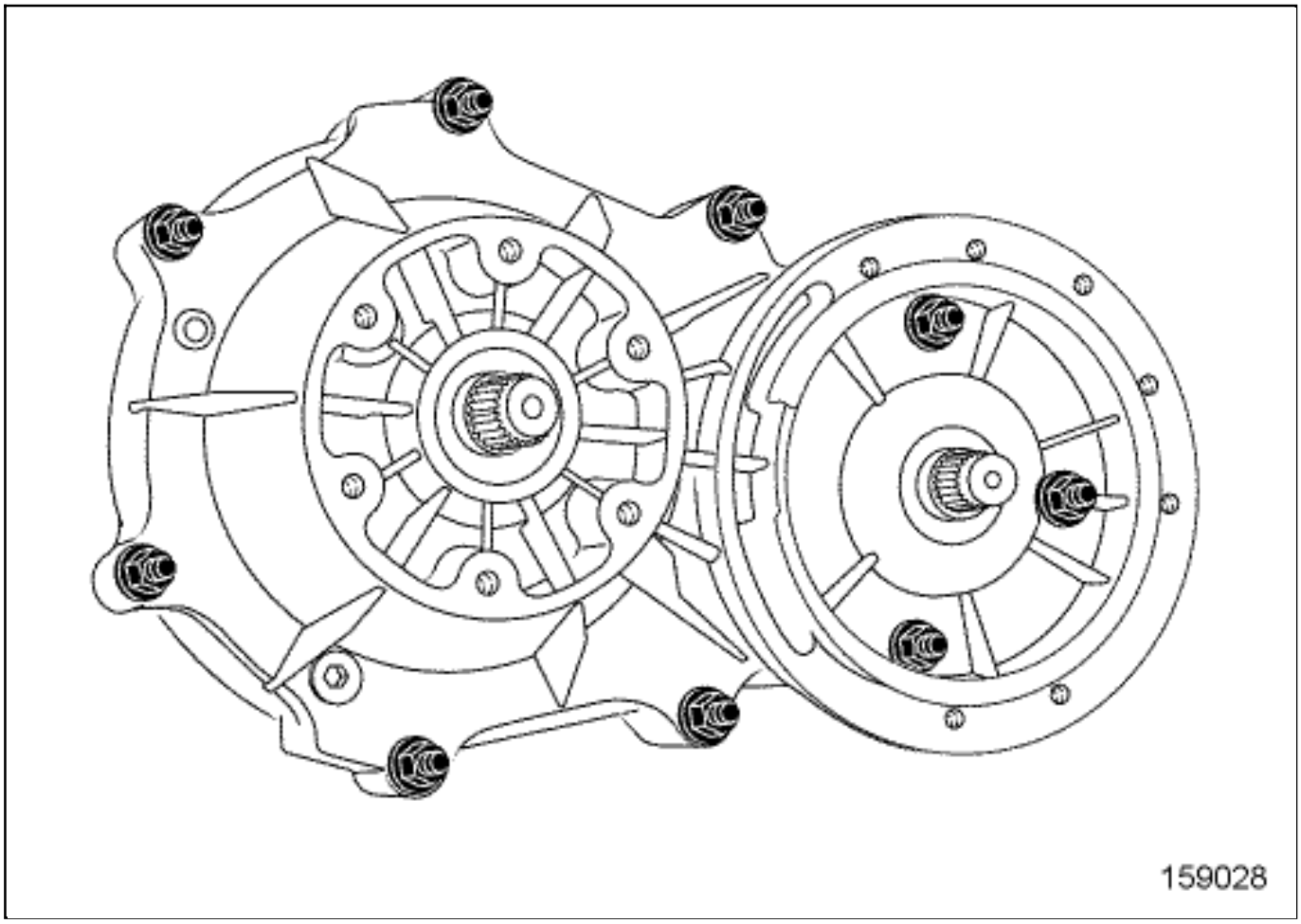

Remove :

- the mechanism housing bolts,
- the mechanism housing.

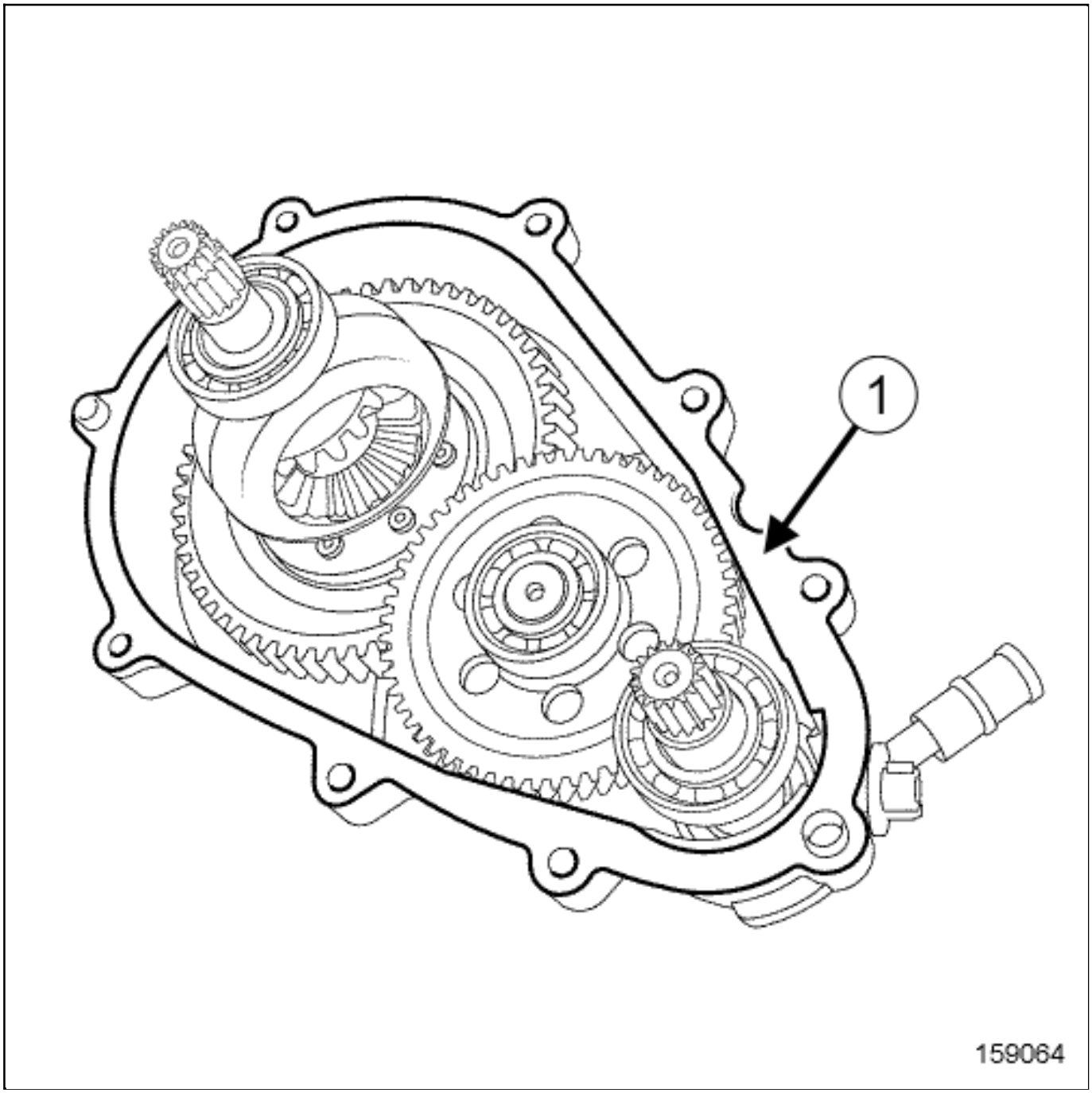

- Remove the mechanism housing seal(1) .

REFITTING

1. REFITTING PREPARATION OPERATION

-

Use surface cleanerVehicle: Parts and consumables for the repair to clean:

- the shafts,
- the shaft mating surfaces,
- the mechanism housing.

Parts always to be replaced : mechanism housing seal.

2. REFITTING OPERATION

Refit :

- the new mechanism housing seal,
- the mechanism housing,
- the mechanism housing bolt.

Torque tighten the mechanism housing bolt32 N.m.

3. FINAL OPERATION

Proceed in the reverse order to removal.

RENAULT

Technical Note 5164A

TTY

Noise fault finding

All types

General Methods

77 11 398 922 December 2006 EDITION ANGLAISE

"The repair procedures given by the manufacturer in this document are based on the technical specifications current when it was prepared.

The procedures may be modified as a result of changes introduced by the manufacturer in the production of the various component units and accessories from which his vehicles are constructed."

All copyrights reserved by Renault.

Copying or translating, in part or in full, of this document or use of the service part reference numbering system is forbidden without the prior written authority of RENAULT.

© Renault s.a.s. 2006

General information

Contents

Page

01E FAULT FINDING INTRODUCTION

Fault finding – Introduction 01E-3
Fault finding – Customer complaints 01E-20
Fault finding – Fault finding charts 01E-37
Noise diagnostic tool – Use 01E-101

1. SCOPE OF THIS DOCUMENT

This document covers the following topics:

- Noise from the drive train,
- Noise when changing gear,
- Air inlet noises,
- Noise from the turbocharger,
- Noise from the exhaust
- Interference noise (suspension, steering, etc.)
- Noise from the dashboard,
- Noise from the upholstery,
- Noise from the sunroof,
- Noise from the window winders,
- Noise from the speakers.

This document presents the fault finding procedure applicable to all vehicles with the following specifications:

- Vehicles with 2 drive wheels for the drive train,
- Manual gearboxes (for drive train noises)
- Original sliding/tilting sunroof.

2. PRE-REQUISITES FOR FAULT FINDING

Documentation type

- Fault finding procedure (this document):
- Repair Manual for the vehicle concerned

Type of diagnostic tools

- CLIP to lock the airbags (if necessary)
- Noise diagnostic tool (see **01E GENERAL VEHICLE INFORMATION, Noise diagnostic tool - Use**)

3. FAULT FINDING PROCEDURE

1st time
complete the fault finding log
with the customer (with or without a test)

↓

2nd time
Use the Customer Complaint classification chart to identify the cause of the noise and
the corresponding ALP based on the conditions under which the noise appears

↓

3rd time
Apply the corresponding **F**ault **F**inding **C**hart (ALP).
Identify the origin of the fault

Rules for dealing with a noise-related customer complaint when the vehicle is received or in the workshop:

Rule no. 1: When the customer complaint is registered.

When the appointment is made by telephone, ask if the customer would be able to reproduce the noise in the workshop (enable the cotech to hear the noise with the customer present so that the fault finding procedure is more efficient).

If the customer cannot, preferably offer a date when they are not busy in order to deal with the noise.

Rule no. 2: Take information in a methodical manner.

The fault finding log must be completed to accurately describe the customer complaint in addition to the Order of repair.

4. FAULT FINDING LOG

IMPORTANT!

WARNING
All problems involving a complex system call for thorough diagnostics with the appropriate tools. The FAULT FINDING LOG, which should be completed during the fault finding procedure, ensures a record is kept of the procedure carried out. It is an essential item when discussing the fault with the manufacturer.

It is therefore mandatory to fill out a fault finding log for each fault finding procedure.

You will always be asked for this log:

- when requesting technical assistance from the Techline,
- for approval requests before replacing parts for which approval is compulsory
- which must be attached to monitored parts for which reimbursement is requested. It is therefore used to decide whether a reimbursement will be made under warranty and leads to improved analysis of the removed parts.

A blank log is available on the following pages

FAULT FINDING LOG

Page 1 / 4

Administrative identification

Date			2 0
Log completed by			
VIN			
Engine			
Diagnostic tool		CLIP	
Update version			

Customer complaint

	520	Abnormal noise, vibrations

Other

Your comments:

Conditions under which the customer complaint occurs

		In forwards gear (whilst driving)			Whilst reversing			When starting (increased engine speed in 1st)
		Whilst parking			When stationary (engine running)			When stationary (engine not running)
		Switching the engine on/off						

– Engine

	Engine fitted with a turbocharger		Petrol		Diesel

– Vehicle speed

	between 0 and 30 mph (0-50 km/h)		between 30 and 54 mph (50-90 km/h)		between 54 and 78 mph (90-130 km/h)
	constant		variable		

FAULT FINDING LOG

Page 2 / 4

– Engine speed

	at idle speed (neutral)		at low engine speed Diesel and Petrol < 1500 rpm		at medium engine speed 1500 < Diesel < 3000 rpm 1500 < Petrol < 4000 rpm
	at high speed Diesel > 3000 rpm Petrol > 4000 rpm		stabilised		variable
	under speed		over speed		increasing engine speed (no load)
	lessens when engine speed increases				

– Engine temperature

	When cold		When warm		Quieter when hot
	Worse when hot				

– Driving conditions

	In neutral		When decelerating		Heavy acceleration
	On a hill		Pedal released suddenly after it is fully depressed		

– Vehicle speed

	Stabilised: vehicle speed or engine speed constant.		Accelerating

– Driver's action on the accelerator (acceleration or deceleration)

	no pressure		foot resting on or lightly depressing the accelerator pedal		Accelerator pedal moderately depressed and held (neither slightly nor fully depressed)
	pedal held fully depressed		pedal fully depressed suddenly (on-off)		Accelerator pedal gradually released
	Accelerator pedal suddenly released		disappears when pedal released without braking		

FAULT FINDING LOG

Page 3 / 4

– Driver's action on the gear lever (gearbox)

	when changing gear (one or more)		gets worse when changing gear quickly		only appears when engaging the gear.
	Always appears when engaging AND disengaging gear.		worse when downshifting		

– Driver's action on the clutch

	the customer complaint disappears when declutching and reappears when engaging the clutch		the customer complaint disappears when changing gear, disengaged.		the customer complaint lessens when changing gear, disengaged. (test type handling in a motor show)

– Driver's action on the steering wheel

	Little movement (pressure change, cornering)		Significant movement (roundabout, manoeuvres)

– Driver's action on a vehicle fitting

	Upholstery (adjustments)		Sunroof (opening/closing)		Sunblind (opening/closing the sunblind)
	Dashboard (glovebox, air conditioning controls, etc.)		Speaker (switching on)		whilst opening/closing the window
	whilst opening or closing the window fully		when closing the door (window half-open)		

FAULT FINDING LOG

Page 4 / 4

– Weather conditions

	cold weather (frost)		hot weather (sun)		humid conditions
	dry conditions				

– Main beam

	smooth		cobbled		grooved
	in poor condition: unmade, road seams, drain cover, pot hole, etc.		When driving over a speed bump		Mounting/dismounting the pavement
	Corner (to the left or right)		parallel parking		

5. SAFETY INSTRUCTIONS

Safety rules must be observed during any work on a component to prevent any damage or injury:

The road tests referred to in this document should be carried out in accordance with Road Traffic Regulations (speed limits must be obeyed).

During the tests performed with the engine running, observe the safety advice. Pay particular attention to the accessories, moving parts or parts which heat up (fan assembly activation, increase in temperature of the air pipe at the turbocharger outlet, etc.)

WARNING
When carrying out road tests, obey Road Traffic Regulations, especially speed limits.

Within the framework of a fault finding test, two people are required to carry out the research and specific identification of the source of the noise.

6.1. DEFINITIONS OF CAUSES:

This document deals with the following causes of noise:

Drive train:

TEST PROTOCOL FOR CLASSIFICATION OF THE CUSTOMER COMPLAINT

A. If the customer complaint appears when driving

– Perform **gradual** accelerations and decelerations [1] [2] on each gear to determine which gear(s) display the customer complaint (on an even straight line with a good surface, warm engine and after having checked that the oil and coolant levels are correct). Note the vehicle speed, gear ratio and engine speed.
– **Disengage / re-engage**: if the customer complaint disappears when disengaging and reappears when re-engaging the gear and the engine speed is stabilised, there is a whining noise and/or growling.
– **Change pressure**: if the noise level is more pronounced or decreases when pressure is applied (when overtaking, cornering, on a roundabout, moving steering wheel to the left/right), this is not a drive train fault (check the wheel bearings).

B. If the customer complaint appears particularly during a parking manoeuvre (steering greater than one steering wheel revolution, in 1st or 2nd gear)
If a noise appears when accelerating and disappears when decelerating, there is a murmuring noise from the differential.

C. If the customer complaint appears when stationary
In neutral and disengaged, increase the engine speed **very** gradually [2].
If the noise identified when driving is still present at the same engine speed, it is not a drive chain fault.

[1]: The speed range under which the customer complaint appears may be restricted. It is necessary to slowly increase and decrease the engine speed for each gear.
[2]: Increased engine speed: as long as the noise can be heard.
– up to approximately 4500 rpm (petrol engine),
– up to approximately 3000 rpm (diesel engine).
Never go into the red zone.

Whining noise (drive train)
Definition: high-pitched noise caused by teeth engaging when driving.
Note: this customer complaint can be noticed from 0 miles. It is more noticeable on long journeys on a constant road type (motorway). Not to be confused with aerodynamic noise.

Test to identify the whining noise from the engaging teeth: during a road test, hold the gear lever to dampen the gearbox control driveshaft chain. If the noise is quieter or disappears, check the gear lever first and, if the gear lever is correct, consult ALP 13 - Whining noise from the drive train.

Murmuring (differential - relay bearings)
Definition: modulated noise which is similar to the cooing of a pigeon.
Note: this customer complaint can occur at any point in the vehicle's lifetime.

Test to identify the murmuring noise from a driveshaft: during a road test, if there is significant noise when driving in a straight line and when cornering, study the right-hand driveshaft relay bearing. If there is only significant noise when cornering, there is a fault in the gearbox, mainly with the differential.

Growling noise (drive train)
Definition: continuous noise which is similar to the noise when shaking a bag of nuts.
Note: appears particularly when hot and can be easily heard when the windows are open when passing alongside a wall. It is quite noticeable at low speed.

Test to identify the growling noise: during a road test, perform gentle accelerations in 1st and 2nd gear. If the noise dies down or disappears whilst holding the gear lever, study the control instead.

Noise from neutral (drive train)
Definition: sewing machine noise.
Note: disappears when accelerating and declutching.

Exhaust

Crackling from the pipe or ball joint.
Definition:
– For the pipe: noise like a bag of marbles shaken energetically. Very high frequency (very high-pitched).
– The ball joint may grate when fitted to the spring.
Note: can be heard easily from the outside or when the window is open (car park exit, when passing alongside a wall). The noise becomes more pronounced very quickly if no repair work is carried out on the vehicle. It can be reproduced when stationary by shaking the exhaust pipe.

Warning
The crackling may spread and get worse along the exhaust system, despite the cause being very localised at the beginning of the system (connecting hose or ball joint bracket). It may appear that the entire pipe is concerned but this is not the case.

Noise from underbody contact.
Definition: dull or bright metallic noise (fist banging on a table).
Note: it can be reproduced when stationary by shaking the exhaust pipe.

Exhaust leak noise.
Definition: none.
Note: it depends on the engine speed and can be heard according to the extent and location of the leak.

Turbocharger

Meowing noise from the turbocharger.
Definition: single frequency continuous noise, **sub-synchronous to the speed of the turbocharger**.
Note: the meowing noise from the turbocharger is quieter when hot.

Whistling noise from the turbocharger.
Definition: high-pitched whistling which follows the turbocharger rotation speed, **either synchronous to the turbocharger speed, or super-synchronous to this speed (vane number x turbocharger speed)**.
Notes:
– the whistling noise from the turbocharger is worse when hot.
– Any of the fittings installed, poor bonding of the windscreen or cable routing through the bulkhead may be the cause of the detected noise.

Blowing noise from the turbocharger.
Definition: noise similar to the noise made by a ventilation fan (passenger compartment ventilation, engine cooling system)
Note: the blowing noise from the turbocharger is even louder when the turbocharger air flow is higher.

Sighing noise from the turbocharger (Diesel terminology).
Definition: noise similar to a volume of pressurised air being released **suddenly**.
Note: the sighing noise from the turbocharger is even greater when the turbocharging pressure is greater as the pedal is released.

Releasing noise from the turbocharger: (petrol terminology).
Definition: noise similar to a volume of pressurised air being released **very suddenly** (activation of the turbocharger recirculation valve).
Note: the releasing noise from the turbocharger is even greater when the turbocharging pressure is greater as the pedal is released.

Air intake

Air inlet whistling.
Definition: high-pitched noise similar to whistling.

Test protocol.
Carry out at test in the workshop with the vehicle stationary and the bonnet open:
Warm engine: increased engine speed (neutral) to average speed (4000 rpm for a petrol engine; 3000 rpm for a diesel engine).

Warning.
The air inlet whistling noise must be distinguished from the turbocharger whistling noise. It is directly related to the engine speed and not to the speed of the turbocharger.

Air inlet humming.
Definition: dull noise which is similar to the noise of a bumblebee in flight.
Note: noise sensitive to engine load (petrol).
Noise not sensitive to engine load (diesel).

Noise when changing gear

Noise when engaging and disengaging gear.
Definition: more or less marked dull clicking (short thud).
Note:
– engine stopped, when static, if the same gears are engaged one after another (e.g. neutral- first), the first gear change is always the noisiest. On the other hand, if the gear is changed from neutral - 1st - 2nd then neutral - 1st, there will be as much noise during the first gear change in the first series as in the second.
– depending on the clutch "performance" (ability to separate the engine from the gearbox quickly) the noises when engaging/disengaging may be more pronounced.

Creaking:
Definition: onomatopoeia of a dry noise heard whilst engaging a gear (partially or completely). A malfunctioning gearbox can potentially be accompanied by successive shocks in the gear knob which may prevent gear engagement. Sporadic noise which is similar to a rattle.
Note: for basic range vehicles, it may be normal to notice creaking noises in reverse gear.

Banging during power take-up:
Definition: banging whilst changing gear or during torque inversion (successive acceleration or deceleration).
Note: mainly in the lower gears (1st, 2nd, 3rd).

Interference noise

Definition: noise which is difficult to locate, due to a fault in the chassis, steering, engine and transmission assembly suspensions, underbody area, rotating components or front end panel.

Dashboard

There are three types of dashboard noise:

- **rubbing noises**: two components or sections rub against each other which produces a creaking or grating noise.
- **banging noises**: two components or sections knock together which produces a crackling or rattling noise.
- **vibration**: too much play between two components or sections

These noises are mainly related to contact between two components (cover or front panel and dashboard casing) or related to a component which moves with another component.

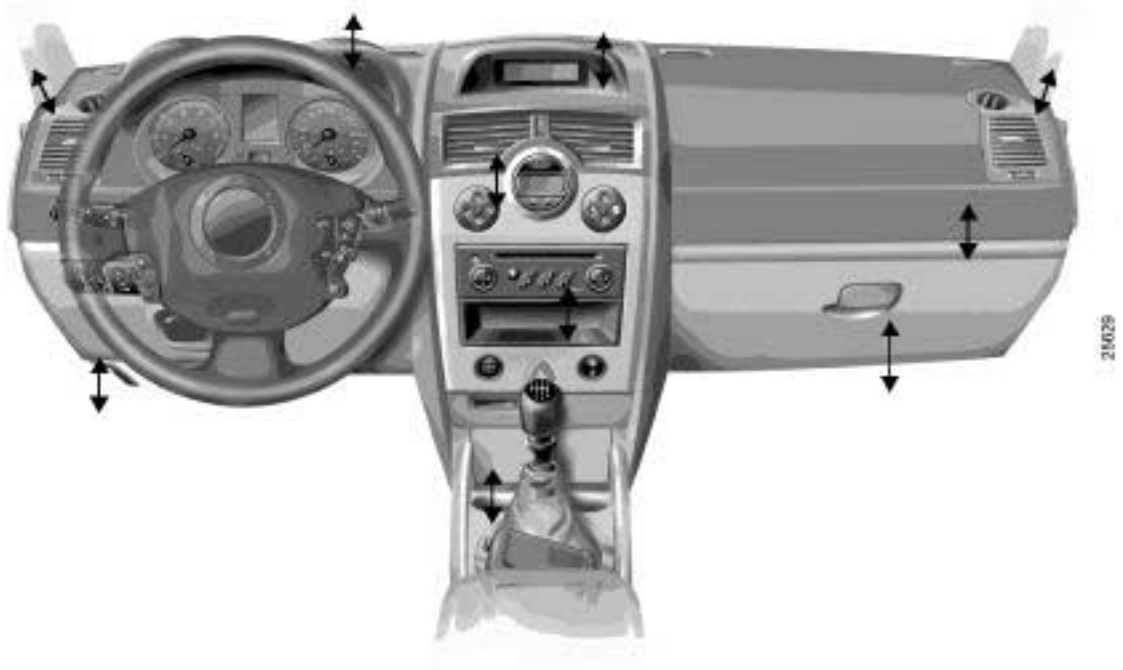

↔: Area likely to produce a noise

Noise from the upholstery

There are three types of seat noise:

- **rubbing noises:** two components or sections rub against each other which produces a squeaking or grating noise (e.g. adjustment lever)
- **banging noises**: two components or sections knock together which produces a crackling noise (e.g. cover) or a rattling noise (e.g. wiring)
- **vibration**: too much play between two components or sections

These noises are mainly related to contact between two components (e.g. cover and dashboard casing) or related to a component which moves against another component (e.g. runners)

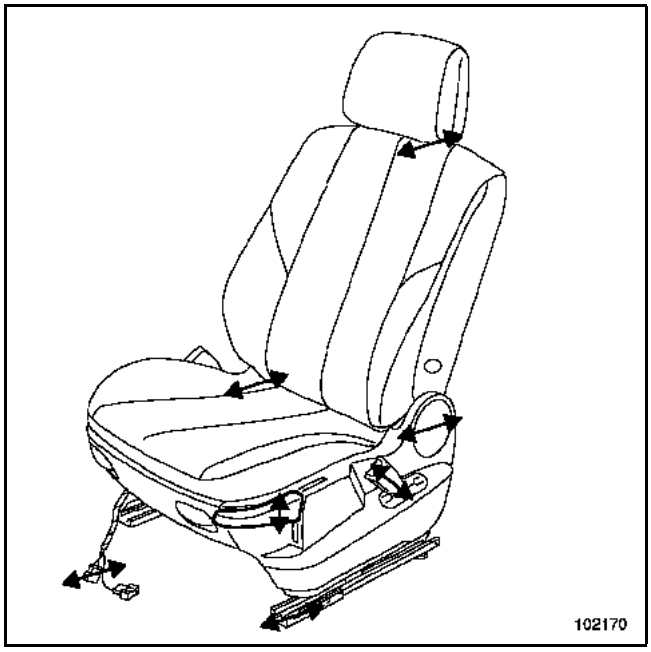

↔: Area likely to produce a noise

Crackling from the speaker

Definition:

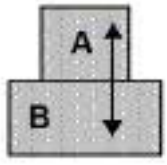

Crackling: quick alternating impact between two components.

Sunroof:

Sunroof chattering: jerky movement of mobile panel when opening/closing (vertical movement of the panel while moving longitudinally)

6.2. CAUSE OF NOISE CLASSIFICATION CHART

WARNING
The Customer Complaint Classification Chart is used to identify the cause of a noise which has been detected by the customer. A Classification Chart is selected using a questionnaire which lists the different conditions under which the noise appears.

Only the **most common conditions** under which the noise occurs are listed in the classification chart. It is important to correctly identify with the customer **the main condition** under which the noise appears.

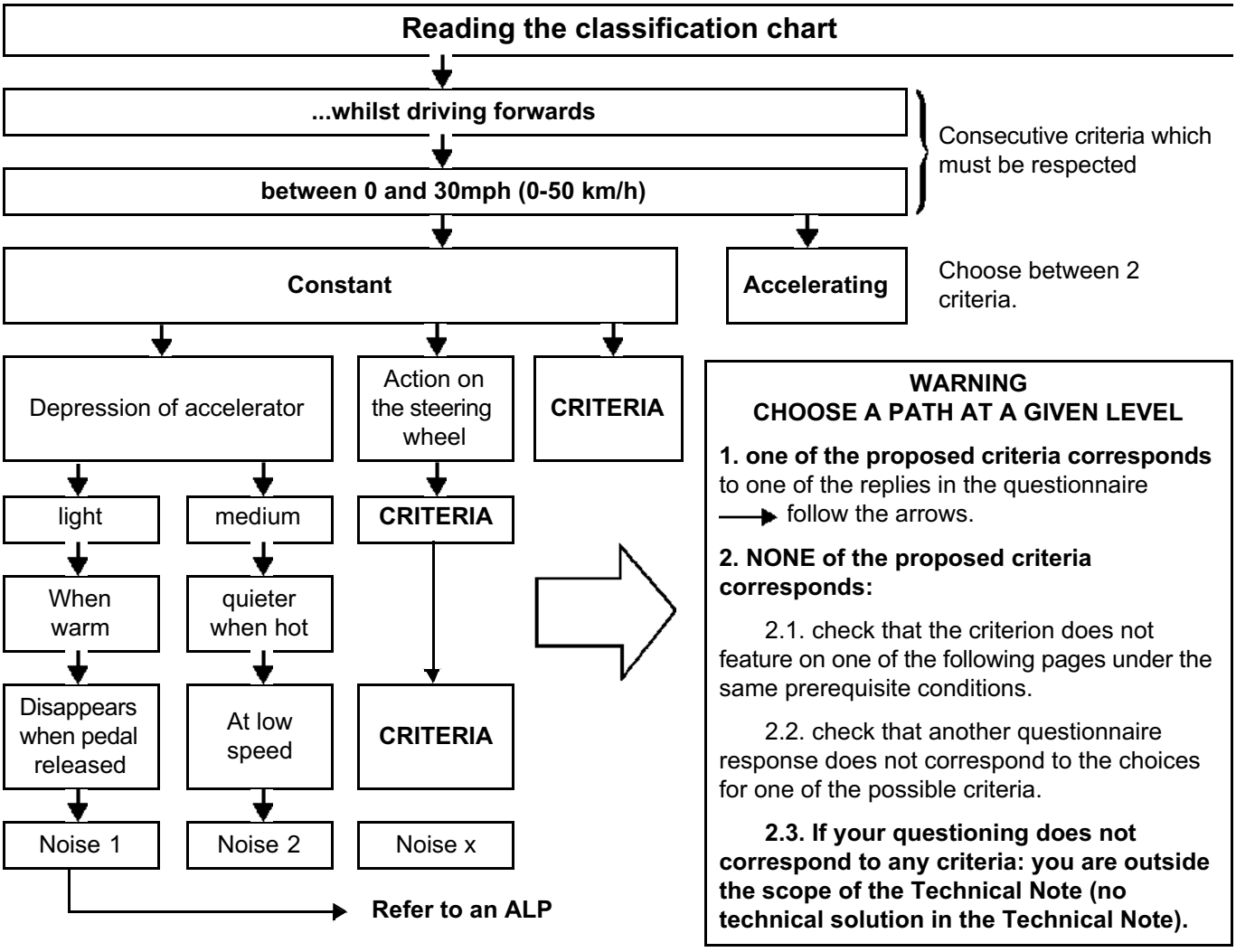

CONDITIONS UNDER WHICH THE NOISE APPEARS

The noise is detected:		
	whilst driving forwards between 0 and 30 mph (0-50 km/h) and the noise depends on the road surface	conditions under which the noise appears no. 1
	whilst driving forwards between 0 and 30 mph (0-50 km/h) and the noise does not depend on the road surface	conditions under which the noise appears no. 2
	whilst driving forwards between 30 and 54 mph (50 and 90 km/h)	conditions under which the noise appears no. 3
	whilst driving forwards between 54 and 78 mph (90 and 130 km/h)	conditions under which the noise appears no. 4
	whilst driving forwards in a particular engine speed range	conditions under which the noise appears no. 5
	whilst driving forwards when the accelerator is depressed in a particular manner	conditions under which the noise appears no. 6
	whilst driving forwards when the gear lever is manipulated in a particular manner	conditions under which the noise appears no. 7
	whilst driving forwards	conditions under which the noise appears no. 8
	Whilst reversing	conditions under which the noise appears no. 9
	starting	conditions under which the noise appears no. 10
	whilst parking	conditions under which the noise appears no. 11
	when stationary, engine running	conditions under which the noise appears no. 12
	when stationary, engine may or may not be running	conditions under which the noise appears no. 13
	vehicle stationary, engine not running or switching ignition on/off	conditions under which the noise appears no. 14

Conditions under which the noise appears no. 1

The noise is detected...

... whilst driving forwards between 0 and 30 mph (0 and 50 km/h)

and the noise depends on the road surface

- Smooth surface + Hot and dry weather → Sunroof creaking: ALP 24
- Cobbled surface → **It may be related to:** 1. Interference noise: ALP 16 2. Dashboard noise: ALP 18 3. Upholstery noise: ALP 19 4. Sunroof rattling: ALP 26 5. Underbody contact noise (exhaust): ALP 4
- Grooved surface → Interference noise: ALP 16
- Poor condition: unmade road, road seams, drain cover, pot hole, etc.
  - Weather has no effect → **It may be related to:** 1. Interference noise: ALP 16 2. Dashboard noise: ALP 18 3. Upholstery noise: ALP 19 4. Sunroof rattling: ALP 26 5. Underbody contact noise (exhaust): ALP 4
  - in hot and dry weather → Sunroof creaking: ALP 24
- On a speed bump → **It may be related to:**
  - Interference noise: ALP 16
  - Sunroof rattling: ALP 26

Conditions under which the noise appears no. 2

The noise is detected...

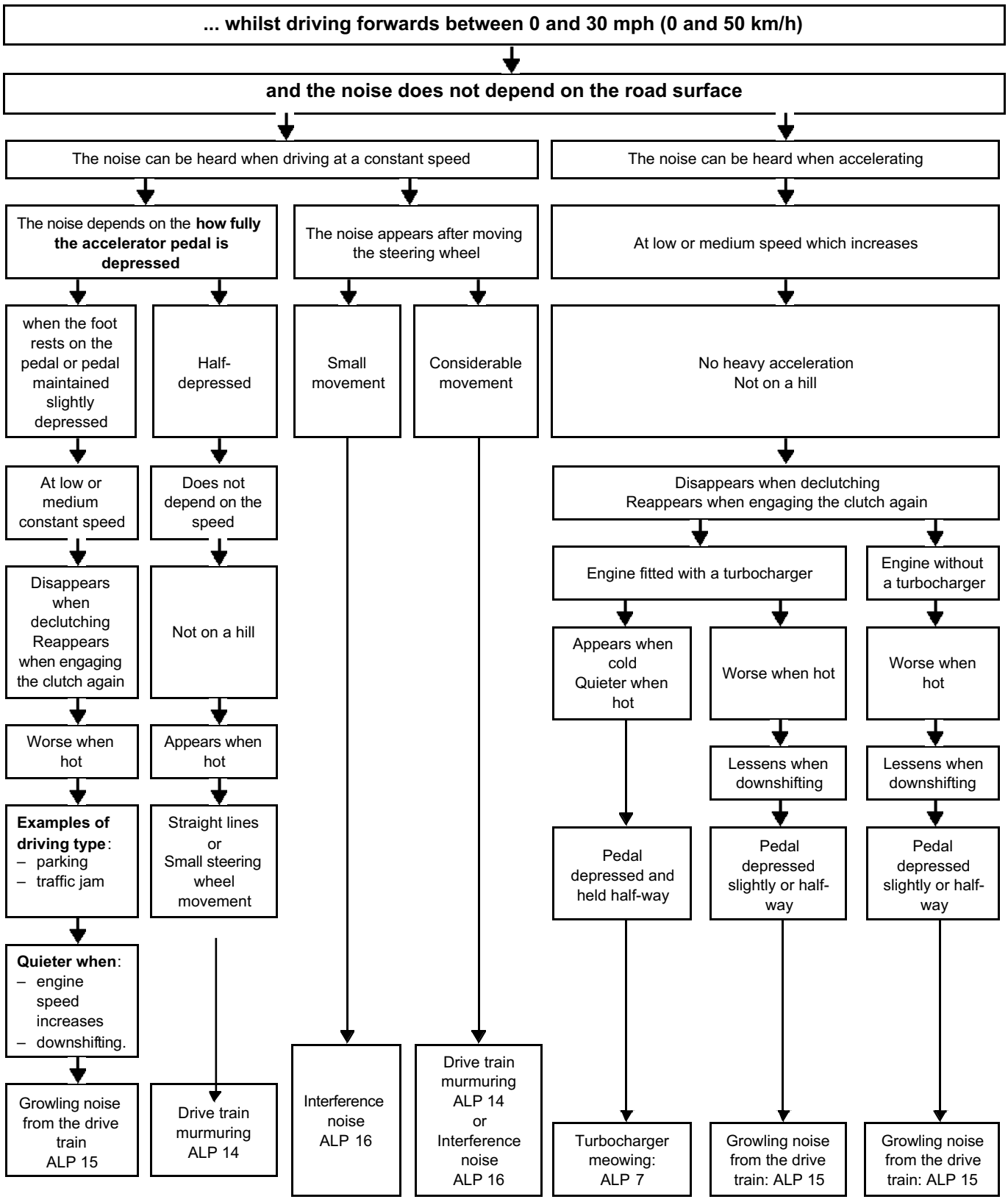

Conditions under which the noise appears no. 3

The noise is detected...

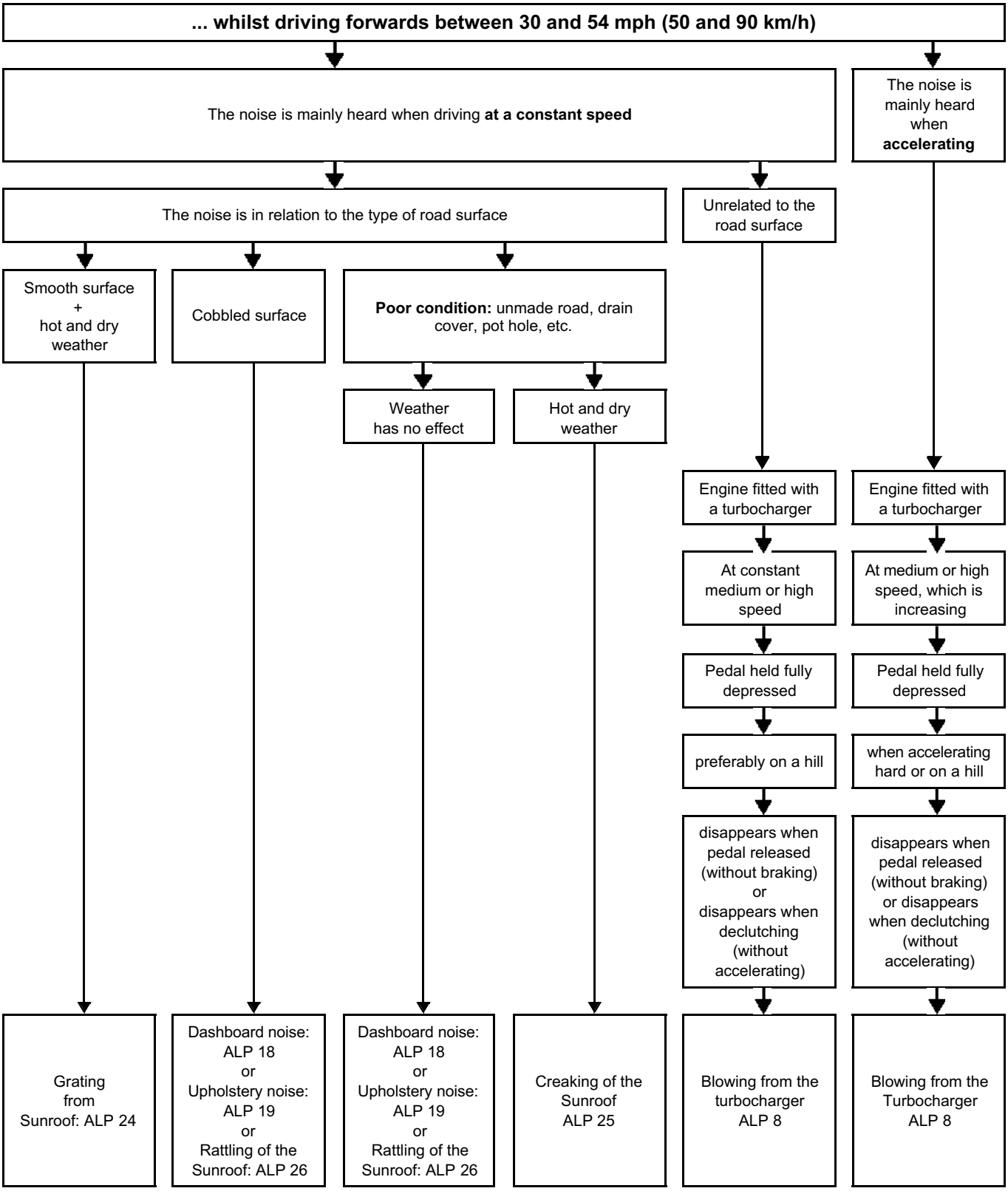

Conditions under which the noise appears no. 4

The noise is detected...

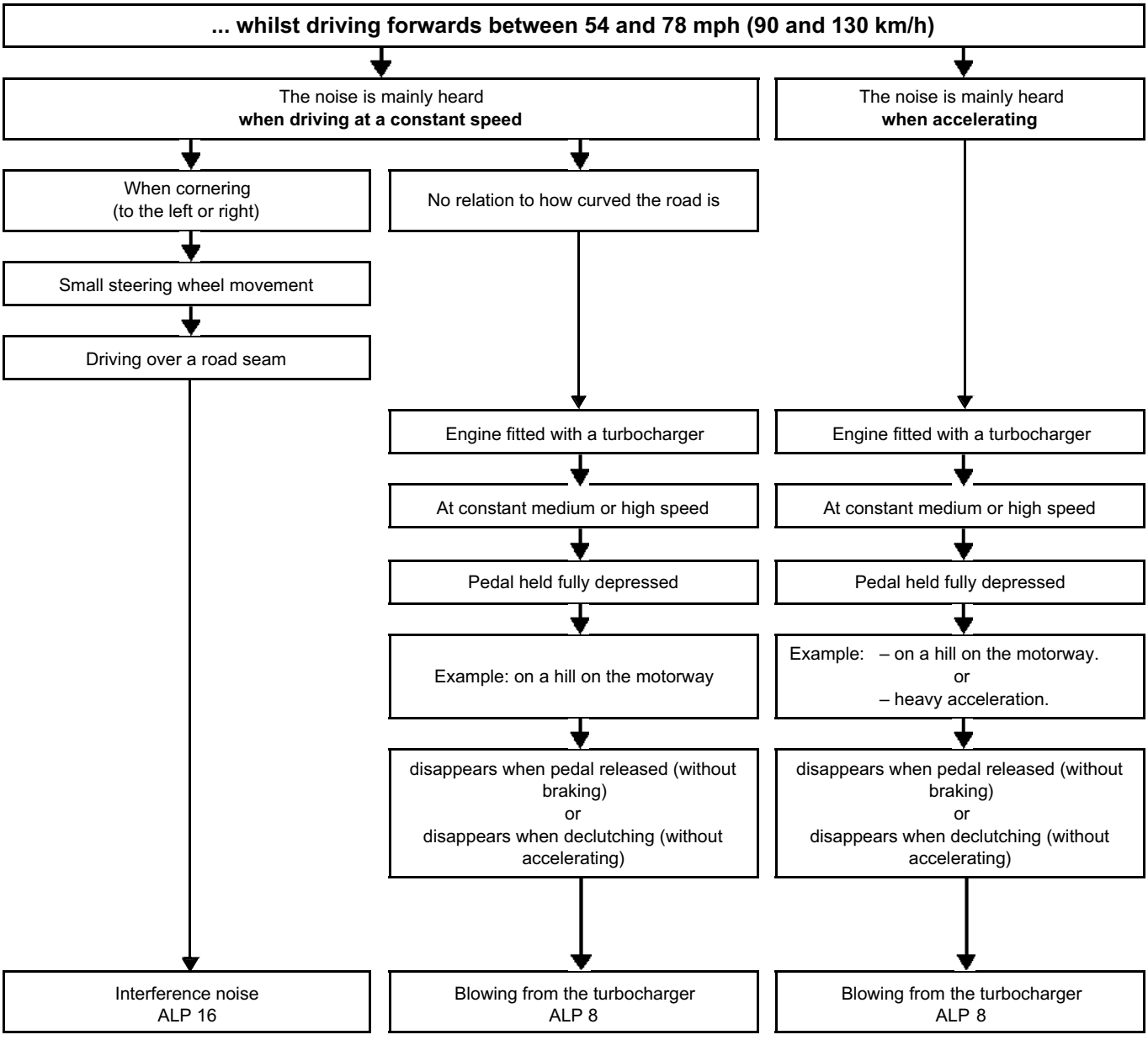

Conditions under which the noise appears no. 5

The noise is detected...

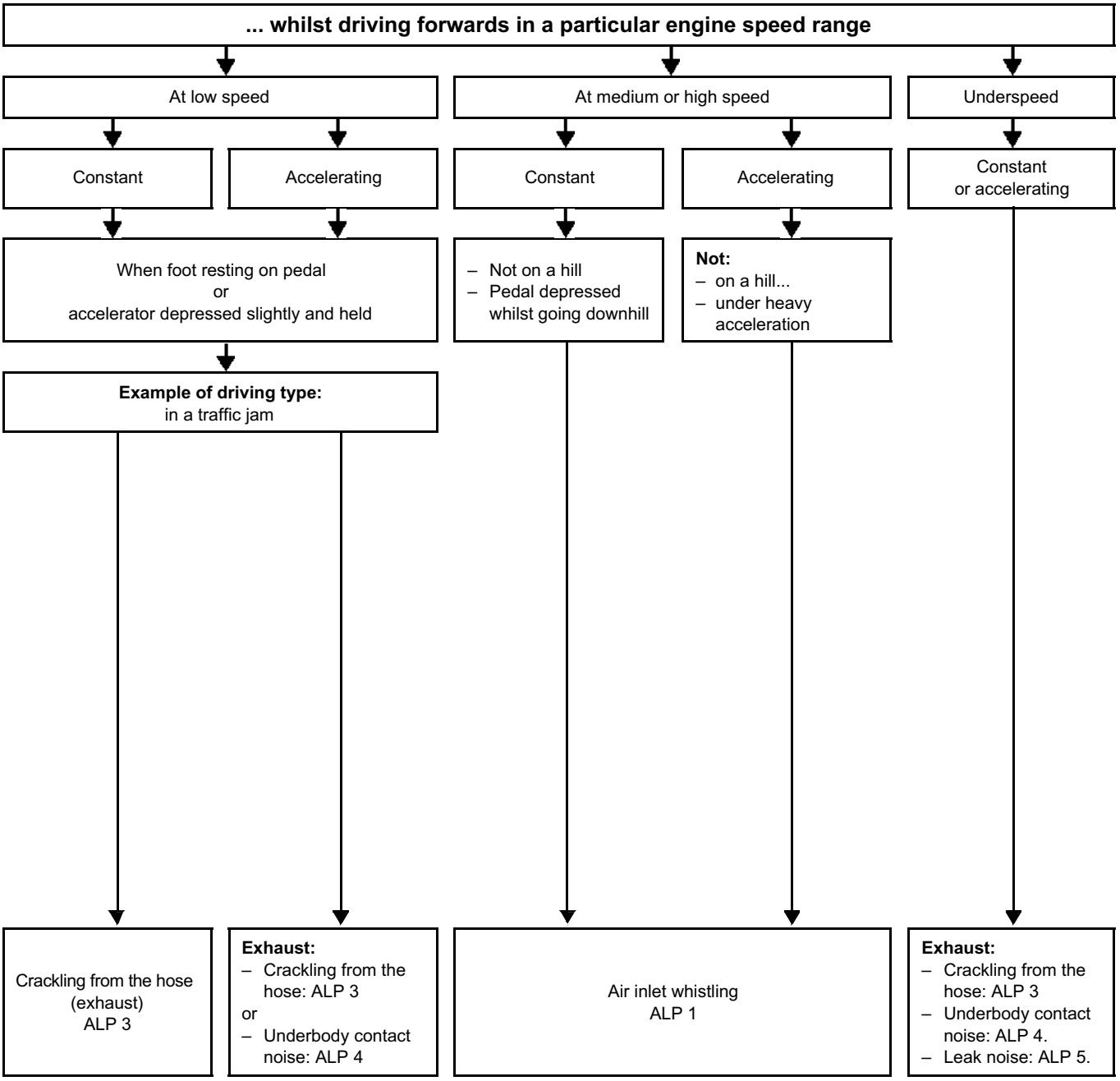

Conditions under which the noise appears no. 6

The noise is detected...

... whilst driving forwards when the accelerator is depressed in a particular manner

Noise present:
from foot resting on pedal...
to pedal held depressed half-way (not lightly nor fully).

With or without turbocharger

constant or accelerating

Appears at any vehicle speed

– Not on a hill.
– No heavy acceleration.

Disappears **instantly** when declutching
Reappears when engaging the clutch again

Does not appear when speed increased unladen (workshop)

Whining noise from the drive train
ALP 13

Noise absent:
– when foot resting on pedal,
– when pedal maintained slightly depressed.

Noise present:
– when pedal maintained depressed half-way (neither slightly nor fully).

Engine fitted with a turbocharger

Accelerating

Appears at any engine speed

Worse when hot

Fades then disappears when declutching
Reappears when engaging the clutch again

The noise fades when pedal is released then disappears (without braking)

Whistling noise from the turbocharger
ALP 6

Pedal fully depressed suddenly
(on-off)

Banging during power take-up
ALP 12

Appears
when pedal released gradually

With or without turbocharger

Deceleration controlled by the engine

Disappears **instantly** when declutching
Reappears when engaging the clutch again

Does not appear when speed increased unladen (workshop)

Whining noise from the drive train
ALP 13

Conditions under which the noise appears no. 6 (continued)

The noise is detected...

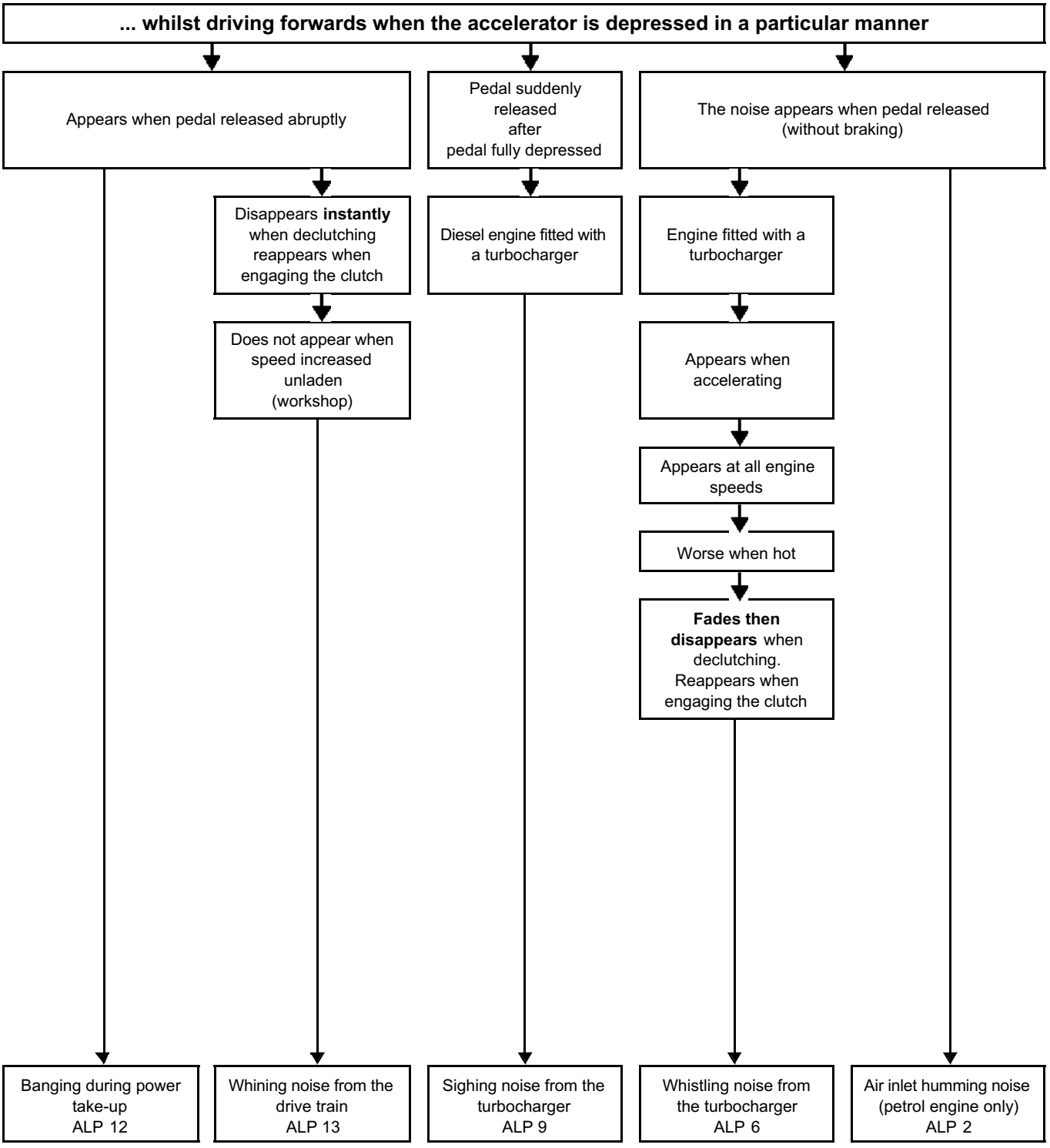

Conditions under which the noise appears nos. 7 and 8

The noise is detected...

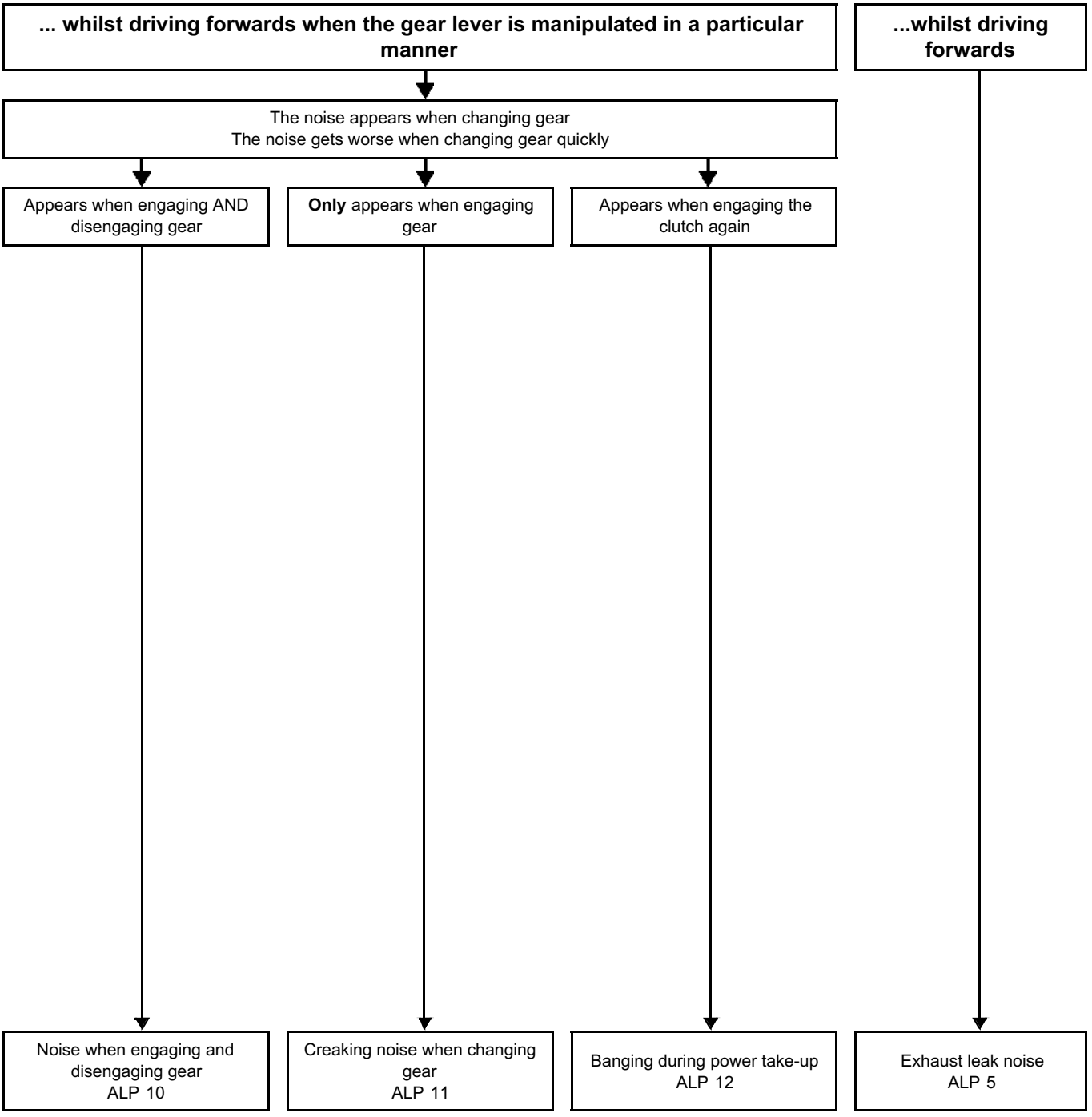

Conditions under which the noise appears no. 9

The noise is detected...

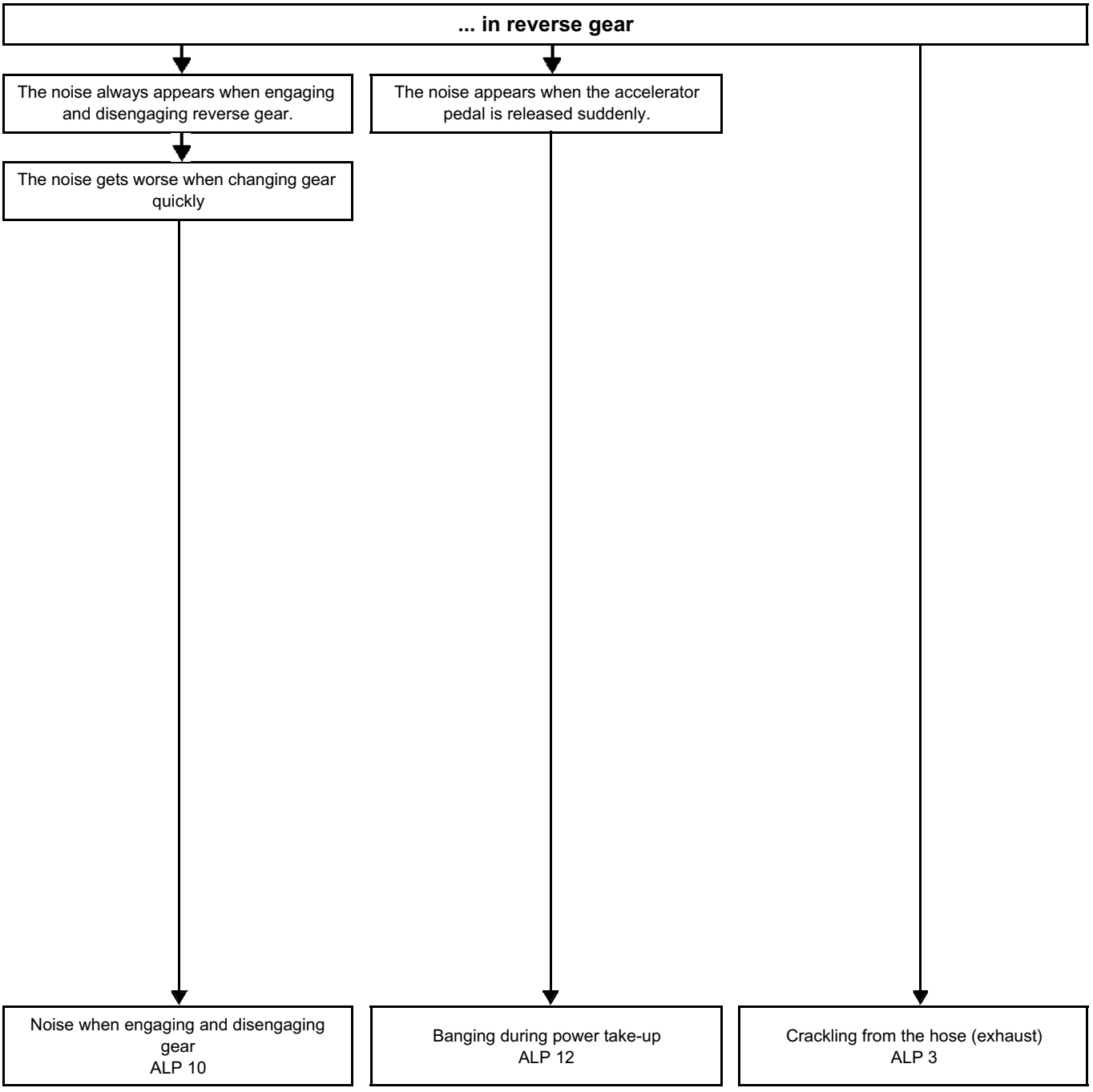

Conditions under which the noise appears no. 10

The noise is detected...

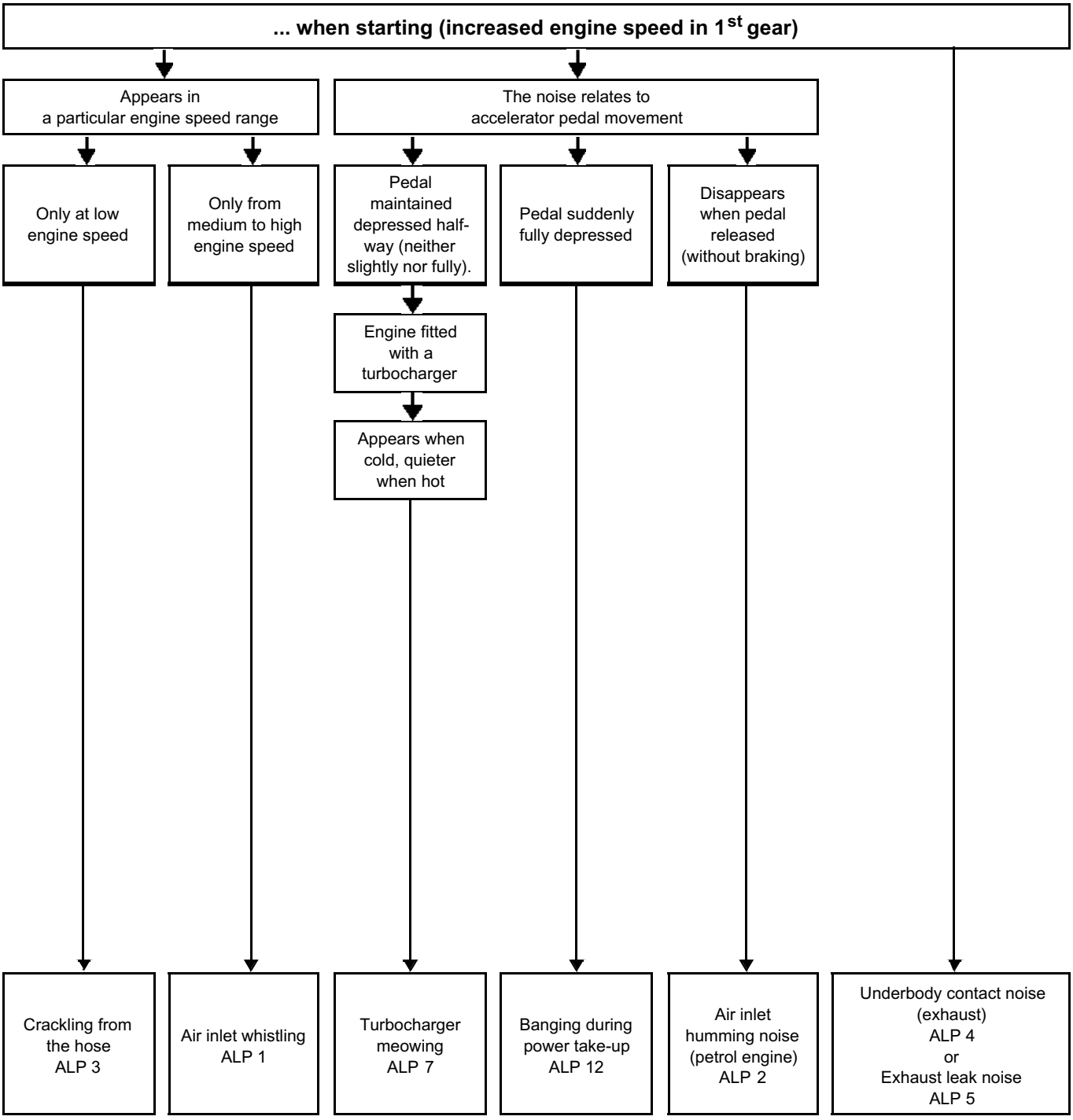

Conditions under which the noise appears no. 11

The noise is detected...

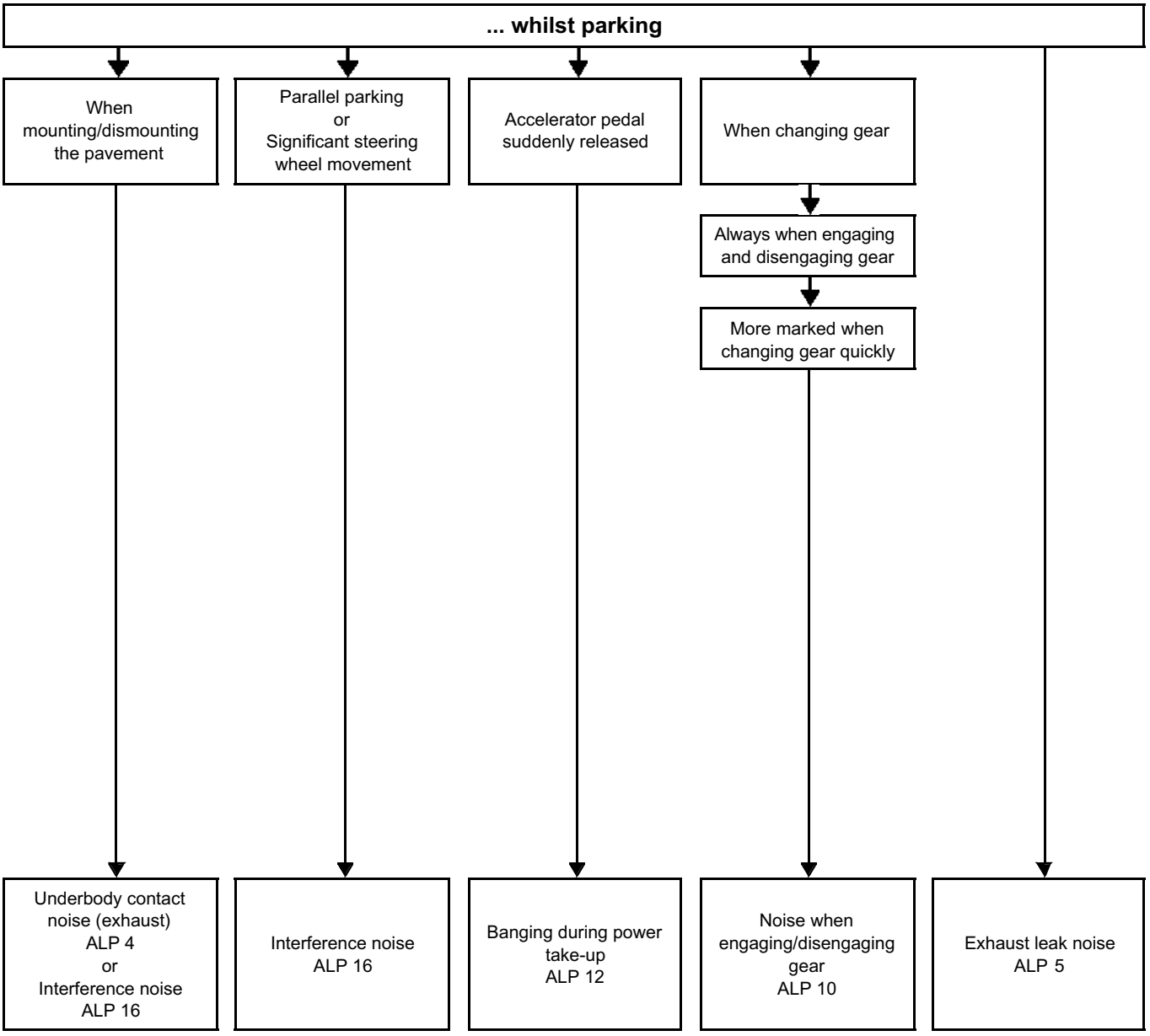

Conditions under which the noise appears no. 12

The noise is detected...

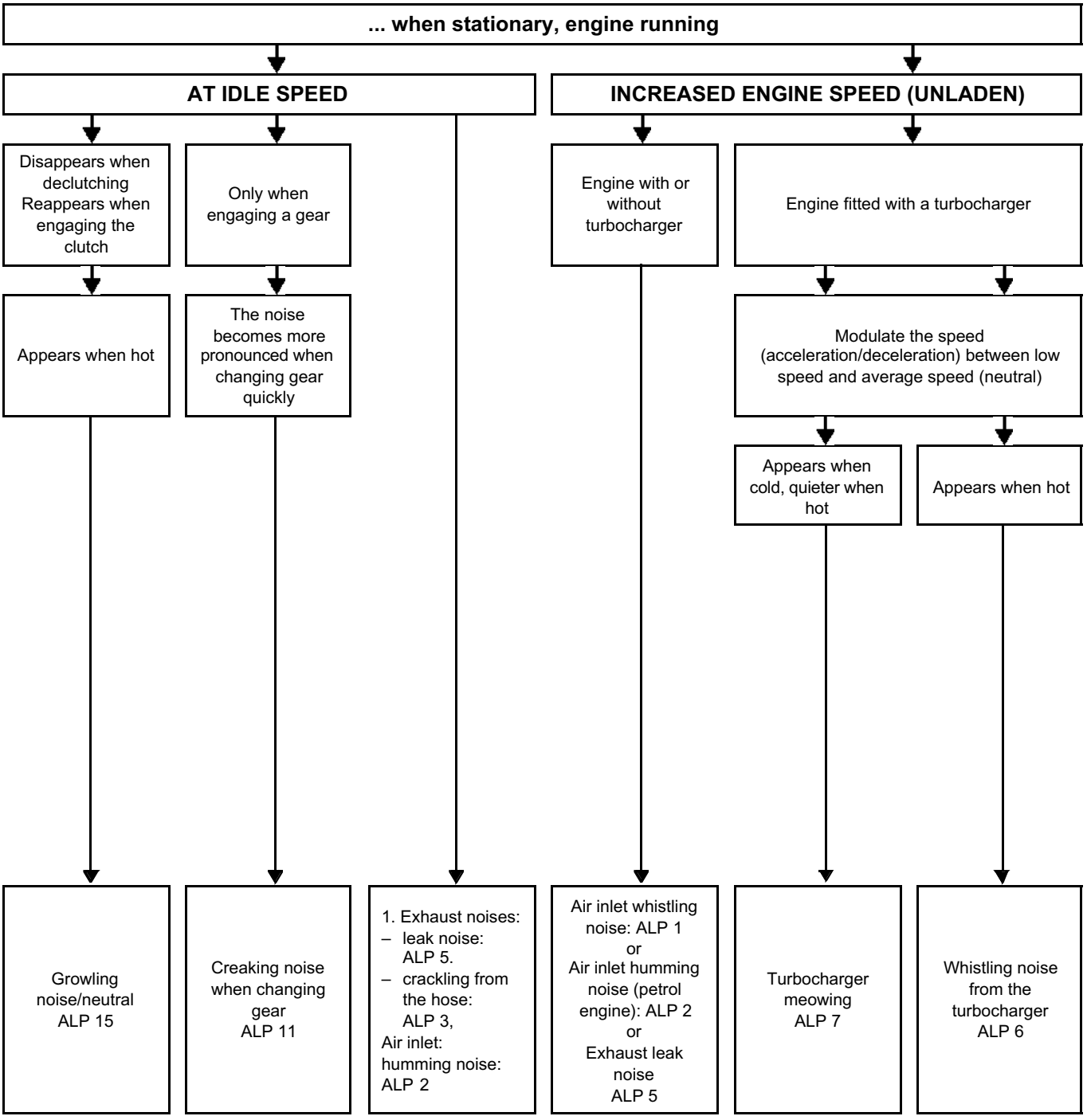

Conditions under which the noise appears no. 13

The noise is detected...

... when stationary, engine running or not running

After driver's action on a vehicle fitting...

Adjusting the seat	Opening/closing the sunroof	Opening/closing the sunroof blind	Using the glove box or dashboard controls	Noise when the speaker is used	**Whilst** opening/closing the window	**Whilst** opening or closing the window fully	When closing the door (window half-open)
Noise from the upholstery ALP 19	Chattering noise from the sunroof ALP 23	Grating noise from the sunroof blind ALP 25	Dashboard noise ALP 18	Crackling from the speaker ALP 17	Noise when window is operated (squeaking/creaking) ALP 20	Noise when window is operated (scratching) ALP 21	Noise from the window when closing the door (rattling) ALP 22

Conditions under which the noise appears no. 14

The noise is detected...

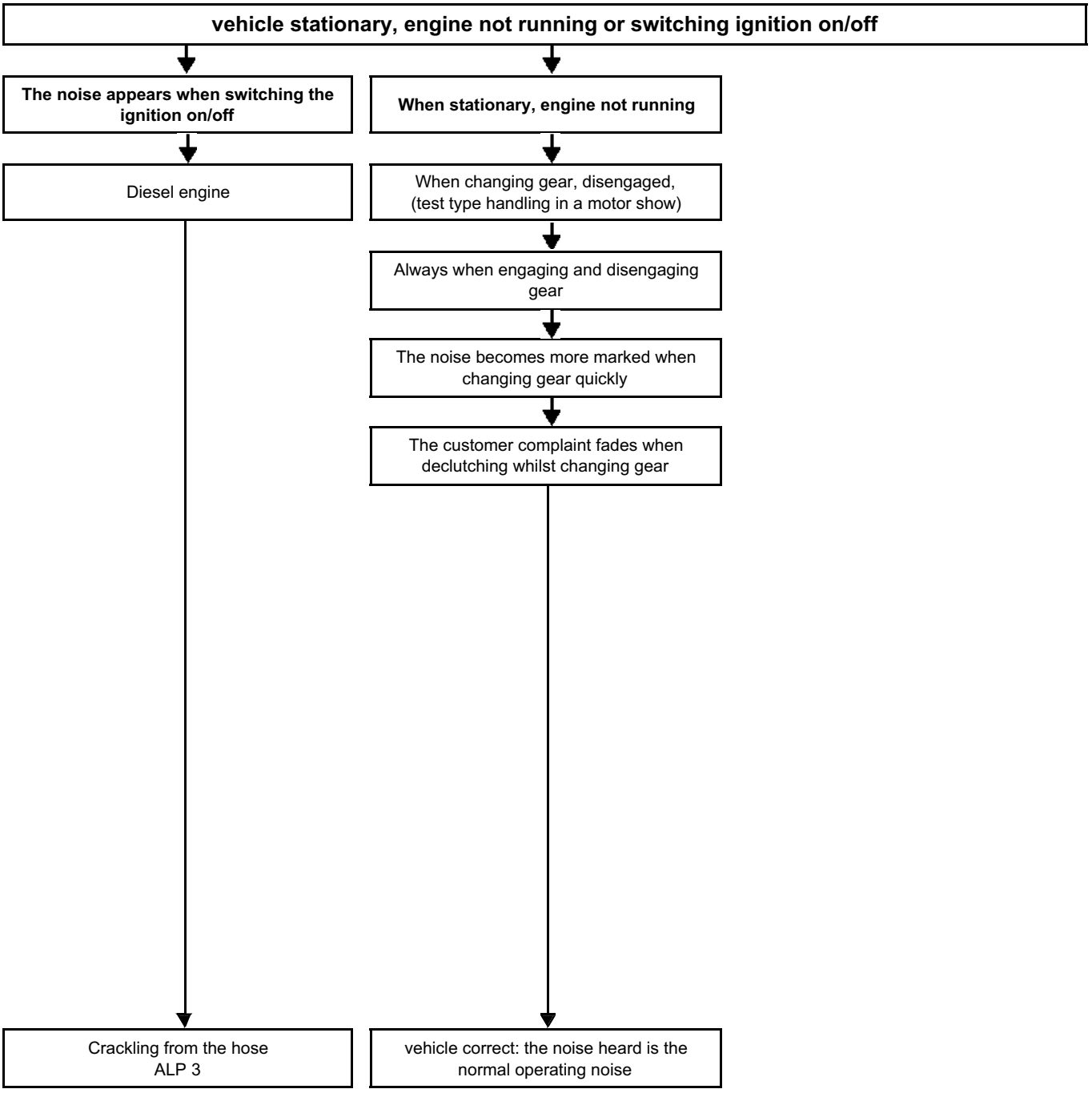

AIR INLET WHISTLING NOISES	ALP 1
AIR INLET HUMMING NOISES	ALP 2
CRACKLING NOISES FROM THE CONNECTING HOSE OR BALL JOINT BRACKET (DEPENDING ON VERSION) (EXHAUST)	ALP 3
UNDERBODY CONTACT NOISE (EXHAUST)	ALP 4
EXHAUST LEAK NOISE	ALP 5
WHISTLING NOISE FROM THE TURBOCHARGER	ALP 6
MEOWING NOISE FROM THE TURBOCHARGER	ALP 7
BLOWING NOISE FROM THE TURBOCHARGER	ALP 8
SIGHING NOISE FROM THE TURBOCHARGER (DIESEL ENGINE)	ALP 9
NOISE WHEN ENGAGING/DISENGAGING GEAR	ALP 10
CREAKING NOISE WHEN CHANGING GEAR	ALP 11
BANGING DURING POWER TAKE-UP OR TORQUE INVERSION	ALP 12
WHINING NOISE FROM THE DRIVE TRAIN	ALP 13

DRIVE TRAIN MURMURING	ALP 14
GROWLING/NOISE FROM NEUTRAL (DRIVE TRAIN)	ALP 15
INTERFERENCE NOISES	ALP 16
CRACKLING FROM THE SPEAKERS	ALP 17
NOISE FROM THE DASHBOARD	ALP 18
NOISE FROM THE UPHOLSTERY	ALP 19
NOISE WHEN WINDOW IS OPERATED (SQUEAKING/CREAKING)	ALP 20
NOISE WHEN WINDOW IS OPERATED (SCRATCHING)	ALP 21
NOISE FROM THE WINDOW WHEN CLOSING THE DOOR (RATTLING)	ALP 22
SUNROOF CHATTERING: JERKY MOVEMENT WHEN OPENING/CLOSING SUNROOF MOBILE PANEL	ALP 23
SUNROOF CREAKING	ALP 24
GRATING NOISE FROM THE SUNBLIND	ALP 25
SUNROOF RATTLING	ALP 26

ALP 1	Air inlet whistling noises

NOTES	Only consult this customer complaint after a complete check with the diagnostic tool.

Preliminary step: determine the area concerned (if accessible).
With the engine running, reproduce the whistling noise and detect the cause by placing a hand (part by part) or using the noise diagnostic tool (see **Noise diagnostic tool - Use**) on components which may be causing the noise and examining the entire circuit.
Two possible scenarios can arise:
– scenario no. 1 - The area is identified: only apply the ALP to the suspect area.
– scenario no. 2 - The area is not identified: follow the ALP, applying it to the entire air circuit.

Check with the engine not running.

Condition of the air circuit assembly
The noise may be caused by:
– a damaged seal,
– a poorly fitted pipe,
– a damaged component.
– Check that all of the pipes are correctly clipped and/or fitted to each other, from one end of the circuit to the other.
– Check that the air filter unit, air resonators, air pipes and turbocharging air cooler are secured correctly.
– Check that the clips are tight enough.

not correct →

Corrective action to be carried out:

In all cases, repair the air circuit, by fitting the pipes correctly and checking that the clips are correctly torque tightened using a release torque wrench preset to the recommended tightening torque.

correct → A

ALP 1 CONTINUED 1	Air inlet whistling noises

A

Air circuit component broken or aged.
- In the engine compartment, check that there is no damaged contact foam, brackets or mountings (damaged mountings and foam or broken pins or fingers).
- Check that there is no contact between the air pipes and other engine components (cylinder head,

↪ **Visual inspection:**
- check that there are no pierced or cracked pipes in the circuit, particularly in the areas of the gaiter and around the clips.
- Check that there are no solder faults.

not correct → Replace the part or parts concerned.

correct ↓

Check with the engine running.

↪ **Check using an "aerosol leak detector" type product,**
part No. 77 11 236 176:
Carry out the previous check again whilst focussing the detector on the areas where the previous checks were difficult to carry out (e.g. gaiter, take-off point, temperature sensor access problems, etc.)

not correct →

Corrective action to be carried out:

Carry out the corresponding corrective actions in accordance with the result of the search, as for example:
- replace the seal and refit it **correctly,**
- fit the pipe(s) correctly,
- replace the damaged component.

correct ↓

B

ALP 1 CONTINUED 2	Air inlet whistling noises

B

Checking the internal air circuit passages, with the air pipes removed

Check the internal air circuit passages, and in particular:

↳ **Air filter:**
- air filter seal on the unit or its slide,
- air filter not damaged,
- air filter conformity (compare manufacturer's recommendations with the filter part number)

↳ **Other internal passage or part:**
- resonator not blocked,
- air pipe not blocked.

not correct →

Corrective action to be carried out:

Replace the part or parts concerned.

ALP 2	Air inlet humming noises

NOTES	Only consult this customer complaint after a complete check with the diagnostic tool.

Preliminary step: determine the area concerned (if accessible).
With the engine running, recreate the humming noise and locate the source by placing a hand (part by part) on the components which may be the cause and examining the entire circuit.
Two possible scenarios can arise:
– scenario no. 1 - The area is identified: only apply the ALP to the suspect area.
– scenario no. 2 - The area is not identified: follow the ALP, applying it to the entire air circuit.

Check with the engine not running.

Condition of the air circuit assembly
The noise may be caused by:
– a damaged seal,
– a poorly fitted pipe,
– a damaged component.
– Check that all of the pipes are correctly clipped and/or fitted to each other, from one end of the circuit to the other.
– Check that the air filter unit, air resonators, air pipes and turbocharging air cooler are secured correctly.
– Check that the clips are tight enough.

not correct → **Corrective action to be carried out:**
In all cases, repair the air circuit, by fitting the pipes correctly and checking that the clips are correctly torque tightened using a release torque wrench preset to the recommended tightening torque.

Air circuit component broken or aged.
– Check that there is not too much clearance in the air circuit created by the old component.
– In the engine compartment, check that there is no damaged contact foam, brackets or mountings (damaged mountings and foam or broken pins or fingers).

↪ **Visual inspection:**
– check that there are no pierced or cracked pipes in the circuit, particularly in the areas of the gaiter and around the clips.
– Check that there are no solder faults.

not correct → Replace the part or parts concerned.

correct → A

ALP 2 CONTINUED	Air inlet humming noises

A

Checking the internal air circuit passages, with the air pipes removed

Check the internal air circuit passages, and in particular:
↳ **Air filter:**
– air filter seal on the unit or its slide,
– air filter not damaged,
– air filter conformity (compare manufacturer's recommendations with the filter part number)
↳ **Other internal passage or part:**
– resonator not blocked,
– air pipe not blocked.

not correct →

Corrective action to be carried out:

Replace the part or parts concerned.

ALP 3	Crackling noises from the connecting hose or ball joint bracket (depending on version) (exhaust)

NOTES	Only consult this customer complaint after a complete check with the diagnostic tool.

Preliminary step:
visually determine if the exhaust system has a ball joint bracket or a connecting hose (see vehicle MR, **19B EXHAUST**).

Check the tightening torques

With the vehicle raised on a lift, check that the torque wrench, which is preset to the recommended tightening torque, is released at the recommended tightening torque of the bracket (flat or ball joint) at the start of the exhaust system (see MR for vehicle, **19B EXHAUST, Catalytic converter: Removal - Refitting**).

→ **Corrective action to be carried out:**

Tighten to the recommended torque (see MR for vehicle, **19B EXHAUST, Catalytic converter: Removal - Refitting**).

Check the exhaust system manually ON A VEHICLE LIFT (engine stopped)

With the exhaust system cold, lightly knock the exhaust system by hand in several places (especially on the front axle subframe), without reaching its stops.
Note:
If the exhaust system is suspended from the subframe, remove the suspension mounting(s) in order to knock the pipe.

crackling noise can be heard →

Replace the part causing the noise:
- **connecting hose:** either replace the part only, when sold separately; or the connecting hose and the part to which it is welded (e.g. catalytic converter).
- **ball joint bracket:** replace the "sealing ring / mounting bolt / mounting nuts (if fitted) / springs" assembly

no crackling noise ↓

A

ALP 3 CONTINUED	Crackling noises from the connecting hose or ball joint bracket (depending on version) (exhaust)

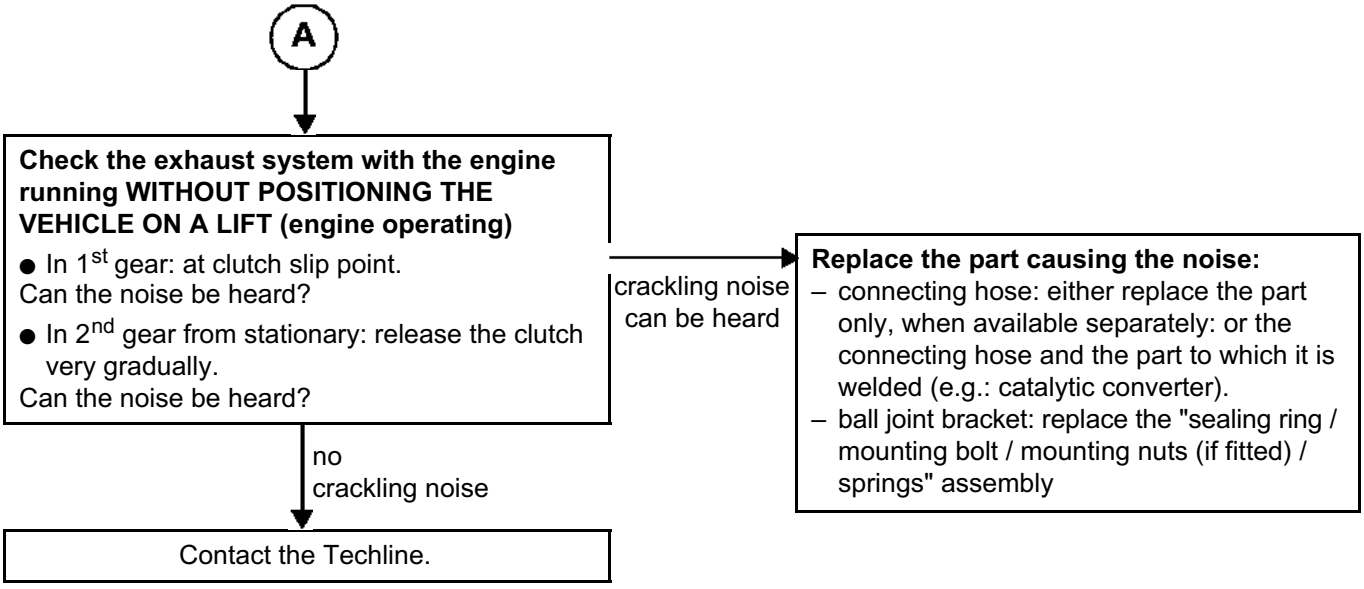

ALP 4	Underbody contact noise (exhaust)

NOTES	Only consult this customer complaint after a complete check with the diagnostic tool.

Check the tightening torques

With the vehicle raised on a lift, check that the torque wrench, which is preset to the recommended tightening torque, is released at the recommended tightening torque of the bracket (flat or ball joint) at the start of the exhaust system (see MR for vehicle, **19B EXHAUST, Catalytic converter: Removal - Refitting**).

→ **Corrective action to be carried out:**

Tighten to the recommended torque (see MR for vehicle, **19B EXHAUST, Catalytic converter: Removal - Refitting**).

↓

Visually and manually check the exhaust system

Knock the exhaust system with force in several places (cold pipe) to accurately identify the areas of the exhaust system in contact with:
– heat shields,
– suspension bolt(s) or rubber mounting bush(es),
– exhaust pipe anchorage point(s) on the body,
– suspension bracket,
– exhaust sleeve.

contact noises noticeable →

Corrective action to be carried out:

Perform one or more of the following operations:
- Replace or manually correct the heat shield
- Check the heat shield mountings.
- Replace the suspension bolt(s).
- Replace the component on which the anchorage points or brackets may be broken or damaged.
- Reposition the exhaust pipe, by moving the sleeve or the exhaust pipe clamp (see MR for vehicle, **19B EXHAUST, Exhaust: Precautions for repair)**

↓ no contact noise

Consult ALP 16: Interference noise

These noises may be similar to exhaust system contact noises.

ALP 5	Exhaust leak noise

NOTES	Only consult this customer complaint after a complete check with the diagnostic tool.

DO NOT BLOCK the exhaust pipe output.
Remove the engine undertray.

Safety
Rules which MUST be respected when the engine is operating:
– heat-protective gloves must be worn when handling the hot exhaust
– connect an exhaust gas extractor

Check the exhaust system, which must only be carried out with the vehicle ON A LIFT, and the engine running

At idle speed (visual, aural and tactile inspection):
Wearing a heat-resistant glove, use one hand to lightly touch the exhaust system from the exhaust manifold to the exhaust tailpipe end.

More specifically, check:
– the seal on the exhaust manifold,
– the condition of the welds on the entire exhaust system,
– the exterior appearance of the exhaust system (impact, corrosion, cracks, welds, holes),
– the condition of the removable connections on the exhaust system (sleeves, clips and brackets)
– the presence of condensed water under the vehicle.

In certain cases and whenever possible in order to determine the leak, check the area in question using an "aerosol leak detector" type product, part no.77 11 236 176.

leak noises noticeable →

Corrective action to be carried out:

In all cases, only replace the suspect part (see MR for vehicle, **19B EXHAUST, Exhaust: Precautions for repair**)

no leak noise → A

ALP 5 CONTINUED	Exhaust leak noise

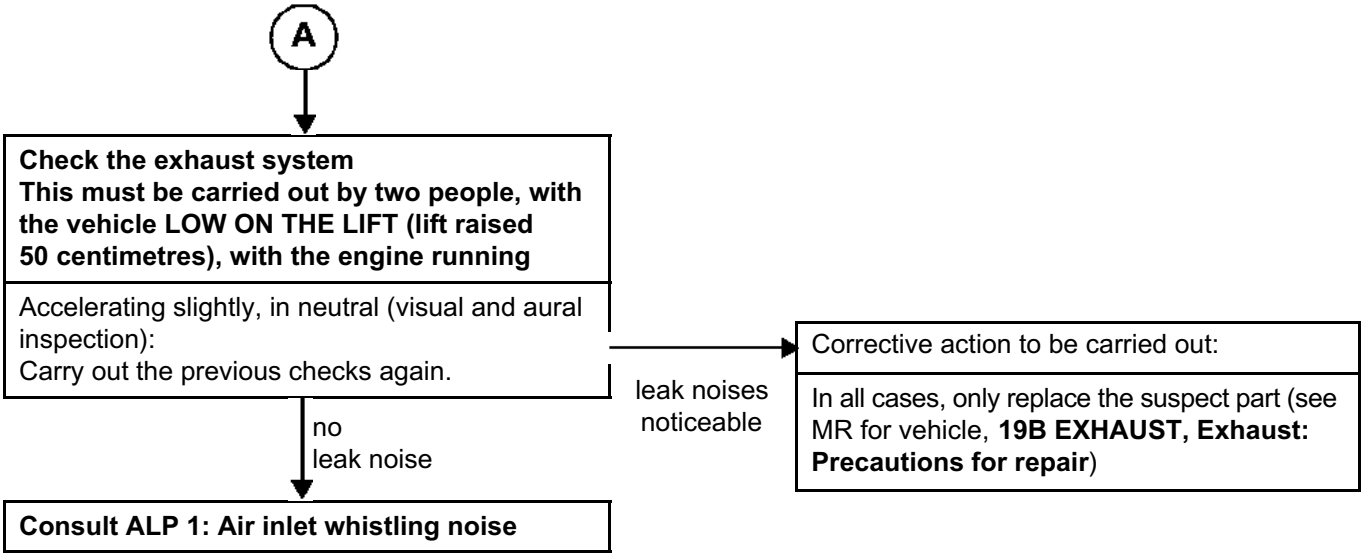

ALP 6	Whistling noise from the turbocharger

NOTES	Only consult this customer complaint after a complete check with the diagnostic tool.

Checking the engine oil level

Check the oil level.

not correct → Adjust the level (not excessively) using the manual dipstick (do not exceed the maximum level)

Checking the engine oil grade

1. By checking the Maintenance Booklet.

if the oil service interval has passed or is close → Change the oil.
Drive so that the engine cooling fan is triggered. (to homogenise the viscosity of the engine oil).
If the noise disappears: end of turbocharger fault finding.

2. By checking if the noise appears when the engine starts from cold.
If this is the case, the oil is the cause (excessive thickening)

if noise when cold → Change the oil.
Drive so that the engine cooling fan is triggered. (to homogenise the viscosity of the engine oil).
If the noise disappears: end of turbocharger fault finding.

Oil service interval correct and no noise when cold → A

If the noise is still present → **Is the noise more pronounced?**

- no → Continue the ALP → A
- yes → Replace the turbocharger (see MR for vehicle, **12B TURBOCHARGING, Turbocharger: Removal - Refitting**)

ALP 6 CONTINUED 1	Whistling noise from the turbocharger

(A)

Engine running: check the turbocharging circuit sealing

Check that there are no leaks using the leak detection product (part no.: 77 11 236 176) on: – the connections between the air pipes downstream from the turbocharger, – the exchanger, – the sensors.	not correct	Repair the leaks
Check the condition of the pipes (worn, torn, pinched, etc.).	not correct	Replace the damaged pipes

correct

Check the exhaust circuit sealing

Check that there are no leaks from the catalytic converter or catalytic pre-converter connections: – check that there are no traces of soot on the connections.	not correct	Correct the leaks, depending on the version: – fit a new seal, – of fit a new clip.
Check the condition of the catalytic converter, catalytic pre-converter and particle filter: – check that there are no traces of soot or cracks.	not correct	Replace the part
Check that there are no leaks around the sensors.	not correct	Correct the leaks
Check that there are no leaks on the exhaust system: – check that there are no traces of soot or cracks on the connections and the pipe.	not correct	Correct the leaks Replace the part (see MR for vehicle, **19B EXHAUST**)

correct

If the noise is still present

Checking the turbocharger for a whistling noise

Is the noise heard when the vehicle is stationary?

no → Perform **TEST 2**

yes → Perform **TEST 1**

ALP 6 CONTINUED 2	Whistling noise from the turbocharger

TEST 1

Configurations: vehicle stationary, **disengaged**, engine running and warm
Before the test, clearly identify the speed conditions under which the noise appears
A) For a vacuum-controlled turbocharger:
– Disconnect the pneumatic control on the turbocharger regulator.
– Clamp the pipe (e.g. using a set of hose clamps).
– Only for a turbocharger on G9T 710* engine: create a vacuum to control the regulator using a pressure-vacuum pump at a vacuum value of 0.6 bar (opening the pressure regulation valve).
B) For a pressure-controlled turbocharger:
– Disconnect the pneumatic control on the turbocharger regulator.
– Clamp the pipe (e.g. using a set of hose clamps).
– Create pressure to control the regulator using a pressure-vacuum pump at a maximum pressure value of 1.4 bar (opening the turbocharger by-pass valve).
These operations aim to lower the speed of the turbocharger which changes the conditions under which the noise appears.
** On the G9T 710 engine, the turbocharger controls are inverted.*

If the noise changes → **Replace the turbocharger** (see MR for vehicle, **12B TURBOCHARGING, Turbocharger: Removal - Refitting**)

If the noise does not change → The turbocharger is not the cause of the noise (end of turbocharger whistling fault finding)

TEST 2

Configurations: vehicle driving when warm
Before the test, clearly identify the speed conditions under which the noise appears
A) For a vacuum-controlled turbocharger:
– Disconnect the pneumatic control on the turbocharger regulator.
– Clamp the pipe (e.g. using a set of hose clamps).
– Only for a turbocharger on G9T 710* engine: create a vacuum to control the regulator using a pressure-vacuum pump at a vacuum value of 0.6 bar (opening the pressure regulation valve).
B) For a pressure-controlled turbocharger:
– Disconnect the pneumatic control on the turbocharger regulator.
– Clamp the pipe (e.g. using a set of hose clamps).
– Create pressure to control the regulator using a pressure-vacuum pump at a maximum pressure value of 1.4 bar (opening the turbocharger by-pass valve).
These operations aim to lower the speed of the turbocharger which changes the conditions under which the noise appears.
** On the G9T 710 engine, the turbocharger controls are inverted.*

If the noise changes → **Replace the turbocharger** (see MR for vehicle, **12B TURBOCHARGING, Turbocharger: Removal - Refitting**)

If the noise does not change → The turbocharger is not the cause of the fault (end of turbocharger whistling noise fault finding) **Consult the ALP: Whining noise in the drive train**

ALP 7	Meowing noise from the turbocharger

NOTES	Only consult this customer complaint after a complete check with the diagnostic tool.

IMPORTANT:
Consult the vehicle's history in the ICM database and check that the exhaust system has not been replaced (even partially) and that no work has been undertaken on the high pressure air circuit.
If this is the case, check that the operation was carried out correctly.

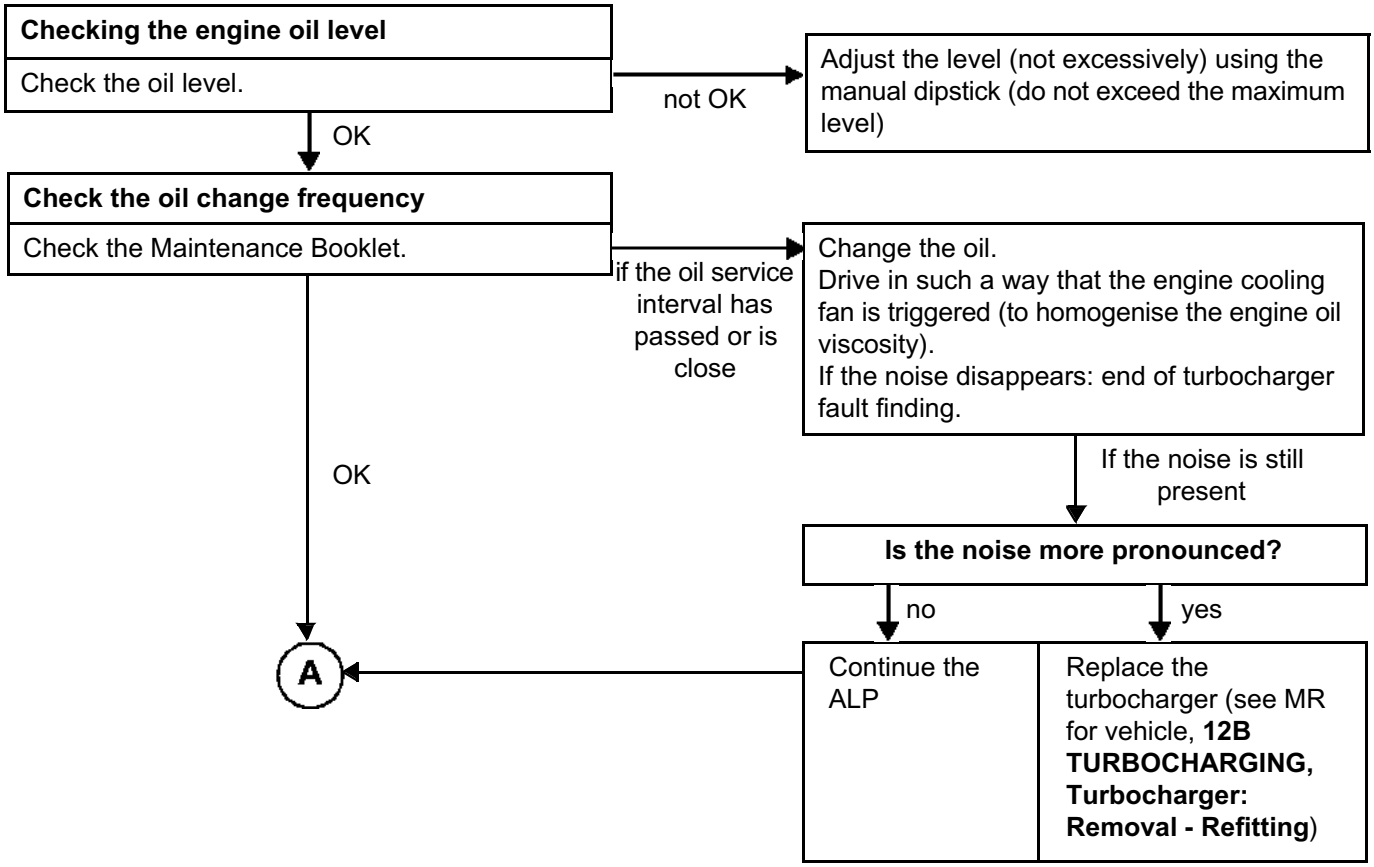

ALP 7 CONTINUED	Meowing noise from the turbocharger

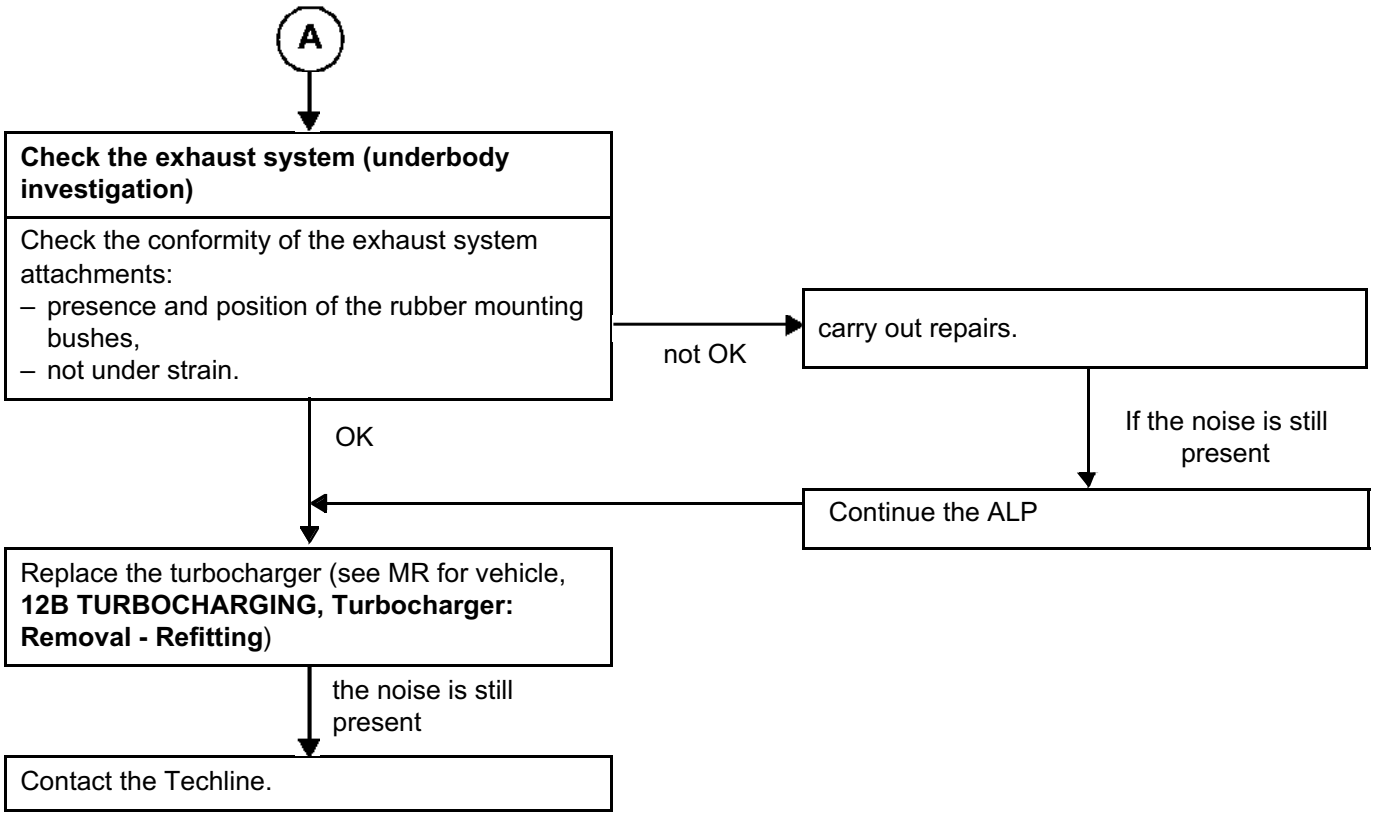

ALP 8	Blowing noise from the turbocharger

NOTES	Only consult this customer complaint after a complete check with the diagnostic tool.

IMPORTANT:
Consult the vehicle's history in the ICM database and check that the exhaust system has not been replaced (even partially) and that no work has been undertaken on the high pressure air circuit.
If this is the case, check that the operation was carried out correctly.

Check the turbocharging circuit sealing		
Check that there are no leaks on the connections between the air pipes downstream from the turbocharger and on the exchanger: – use the leak detection product (part no.: 77 11 236 176)	not correct →	Repair the leaks
Check that there are no leaks around the sensors: – use the leak detection product (part no.: 77 11 236 176)	not correct →	Repair the leaks
Check the condition of the pipes (worn, torn, pinched, etc.).	not correct →	Replace the part (see MR for vehicle, **19B EXHAUST**)
Check that the ducts are correctly fitted and check that the clips are correctly positioned on the cylindrical part of the end pieces.	not correct →	Repair

correct ↓ A

ALP 8 CONTINUED 1	Blowing noise from the turbocharger

(A)

Check the condition of the pulse damper *

Check that there is no oil in the pulse damper.
* cylindrical volume located on the air pipe between the turbocharger and the exchanger (1), see illustration

if oil is present → Clean the air pipe at the turbocharger outlet, see **Technical Note 3938A** section: Cleaning the pipes
(check if there is oil in the exchanger, if so, empty the oil).

If the noise is still present → Continue the ALP

correct ↓

Check the exhaust circuit sealing

Check that there are no leaks from the catalytic converter or catalytic pre-converter connections: – check that there are no traces of soot on the connections.	not correct →	Correct the leaks, depending on the version: – fit a new seal, – or fit a new clip.
Check the condition of the catalytic converter, catalytic pre-converter and particle filter: – check that there are no traces of soot or cracks.	not correct →	Replace the part (see MR for vehicle, **19B EXHAUST**)
Check that there are no leaks around the sensors.	not correct →	Correct the leaks
Check that there are no leaks on the exhaust system: – check that there are no traces of soot or cracks on the connections and the pipe.	not correct →	Correct the leaks Replace the part (see MR for vehicle, **19B EXHAUST**)

correct ↓

(B)

ALP 8 CONTINUED 2	Blowing noise from the turbocharger

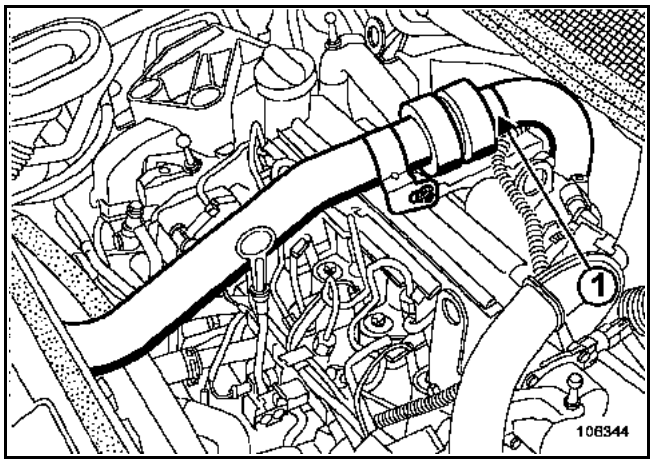

B

Check the operation of the EGR solenoid valve

See Fault Finding MR for the vehicle, **13B DIESEL INJECTION, Fault finding - Conformity check**

not OK → Carry out repairs

If the noise is still present → Continue the ALP

OK → The vehicle is correct

ALP 9	Sighing noise from the turbocharger (diesel engine)

NOTES	Only consult this customer complaint after a complete check with the diagnostic tool.

IMPORTANT: Consult the vehicle's history in the ICM database and check that the exhaust system has not been replaced (even partially) and that no work has been undertaken on the high pressure air circuit.
If this is the case, check that the operation was carried out correctly.

Check the turbocharging circuit sealing **IMPORTANT***:* *Under no circumstances must the sealing test be performed by plugging the exhaust system (risk of damaging the shaft line seals)*		
Check the condition of the air pipes (worn, torn, pinched, etc.).	not correct →	Replace the defective part
Check that the ducts are correctly fitted and check that the clips are correctly positioned on the cylindrical part of the end pieces.	not correct →	Repair the ducts
Check that there are no leaks on the connections between the air pipes downstream from the turbocharger and on the intercooler; use leak detection product (part no.: 77 11 236 176)	not correct →	Repair the leaks
Check that there are no leaks around the sensors: – use the leak detection product (part no.: 77 11 236 176)	not correct →	Repair the leaks

correct → A

ALP 9 CONTINUED	Sighing noise from the turbocharger (diesel engine)

A

Check the condition of the pulse damper*

Check that there is no oil in the pulse damper.
* cylinder fitted on the air pipe between the turbocharger and the exchanger (see the illustration in ALP: Blowing noise from the turbocharger).

if oil is present → Clean the air pipe at the turbocharger outlet, see **Technical Note 3938A** (check if oil is present in the exchanger, if so, empty the oil)

If the noise is still present → correct

Check the operation of the EGR solenoid valve

See Fault Finding MR for the vehicle, **13B DIESEL INJECTION, Fault finding - Conformity check**

not correct → Repair

If the noise is still present → correct

Check the condition and specification of the air circuit upstream and downstream of the air filter

Check the condition of the fresh air scoop, air filter unit, and air pipes upstream and downstream of the filter.

not correct → Repair (see MR for vehicle, **12A, FUEL MIXTURE**)

If the noise is still present → correct

Contact the Techline.

ALP 10	Noise when engaging/disengaging gear

NOTES	Only consult this customer complaint after a complete check with the diagnostic tool.

Check the gear control		
– check that there is no interference between the control and the engine compartment.		
– cable control	not correct →	correct the routing manually.
– bar control: 1. check that there is no interference between the bar and the surrounding area. 2. check that there is no play (external control lever - bar)	not correct →	carry out repairs.
– check that the wiring routing is not under any stress and that the gear selection cable slides easily in the sheath.	not correct →	carry out repairs.
– check for the presence of the soundproofing pad under the gear lever gaiter if it features in the vehicle's specifications.	not correct →	carry out repairs.

↓ Gear control correct

Check the bulkhead soundproofing		
– check that the sheath and cable channels and soundproofing are all in place.	not correct →	carry out repairs.

↓ Bulkhead soundproofing correct

A

ALP 10 CONTINUED 1	Noise when engaging/disengaging gear

A

Cable control		
– Check the condition of the selection and shifting levers and that they are correctly connected to the cables and gearbox.	not correct →	Replace the entire external control (see MR for vehicle, **37A MECHANICAL COMPONENT CONTROLS, Mechanical gear control: Adjustment**) and (see MR for vehicle, **37A MECHANICAL COMPONENT CONTROLS, Gear control unit: Removal - Refitting**).
– Check there is no play between the sheath end piece and the cable sheath stop	not correct →	Replace the entire external control, including the control lever (see MR for vehicle, **37A MECHANICAL COMPONENT CONTROLS, Mechanical gear control: Adjustment**) and (see MR for vehicle, **37A MECHANICAL COMPONENT CONTROLS, Gear control unit: Removal - Refitting**).
Bar control		
– Check that the connection is in good condition (external control yoke - linkage)	not correct →	Replace the linkage and the spacer

External control on the gearbox side is correct

Check the gearbox:		
– check that the cable sheath stop is correctly attached to the gearbox (cable control)	not correct →	Tighten or replace the cable sheath stop
– check that there is no play between the lever and the selector shaft inside the gearbox (faulty pin)	not correct →	Replace the control lever on the gearbox (see MR for vehicle, **21A MANUAL GEARBOX, Gear control unit: Removal - Refitting**).

gearbox correct

B

ALP 10 CONTINUED 2	Noise when engaging/disengaging gear

B

Only for JH JR gearboxes

Replace the locating ball unit (1)

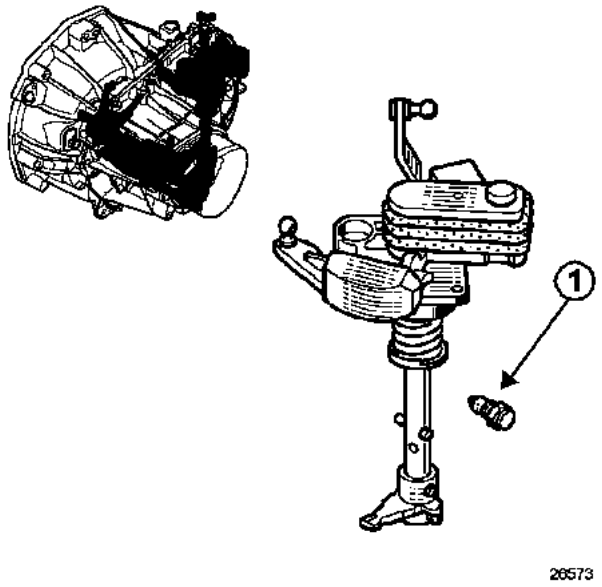

gearbox correct

If the noise is still present, contact the Techline

*

Gearbox	Technical Note No.
PA6 - PK5 - PK6	Technical Note 6003A
TL4	Technical Note 6019A
ZF5 S 270 and ZF6 S 350	Technical Note 6016A
PF6 - PK4	Technical Note 6021A
JA3, JH1, JH3, JR5	Technical Note 6029A
ND0	Technical Note 6034A

ALP 11	Creaking noise when changing gear

NOTES	Only consult this customer complaint after a complete check with the diagnostic tool.

Check that no vehicle mat is preventing the clutch from operating when changing gear.
Check that the gear control setting is correct (see MR for vehicle, **21A MANUAL GEARBOX, Manual gear control: Adjustment**).
WARNING
If creaking can be heard:
- **On EVERY gear ratio:** the customer may have complained previously about hard spots when selecting gear (cable clutches). Therefore it is ONLY the clutch which is concerned (see Technical Note 3451A)
- **When changing from Neutral / 1st or Neutral / Reverse:** start by checking the clutch and follow the ALP if the clutch is correct.
- **Other gears:** start DIRECTLY by checking the gearbox WITHOUT checking the clutch

Check the clutch		
– Check that the clutch release point is correct.		
– For mechanical clutch controls: Check the fork travel (see **Technical Note 3451A**)	not correct →	Adjust the travel if manual adjustment (e.g. Logan). (see MR for vehicle, **37A MECHANICAL COMPONENT CONTROLS, Clutch control: Adjustment**).
– For hydraulic clutch controls: Only check the release point (it must be possible to change gear with the pedal depressed 3/4 of its total travel)	not correct →	Bleed the hydraulic circuit (see MR for vehicle, **37A MECHANICAL COMPONENT CONTROLS, Clutch circuit: Bleeding**).

Clutch release point correct ↓

A

ALP 11 CONTINUED 1	Creaking noise when changing gear

A

Check the gearbox before removing it		Corrective action to be carried out:
– check that there are no leaks on the driveshaft side and/or joint face and/or gear control module (JB, JC gearbox).	not correct →	Repair either: – By replacing the driveshaft seals if the leaks originate from the driveshafts (see MR for vehicle, **21A MANUAL GEARBOX, Differential output seal: Removal - Refitting**) – By repairing the gearbox joint face sealing (see Technical Note for the gearbox*) – By replacing: the gearbox seal and selector shaft if the module is leaking (see Technical Note for JB-JC)
– check the gearbox oil level.	not correct →	Adjust the oil level (using oil specified by the manufacturer).
– check the appearance of the oil Oil which is dark in colour is not a fault. Oil which smells burnt is caused by a hot gearbox (insufficient oil level or hard use). The presence of bronze-coloured rings is not a fault. The presence of particles of an aluminium colour is an indication that the gearbox is seriously damaged internally.	not correct →	– Perform an oil change (using oil specified by the manufacturer). – If aluminium colour particles are present, replace the gearbox (see MR for vehicle, **21A MANUAL GEARBOX, Manual gearbox: Removal - Refitting**)

B

ALP 11 CONTINUED 2	Creaking noise when changing gear

B

Remove the gearbox		Corrective action to be carried out:
– Check the clutch wear.	not correct →	Replace the whole clutch system. *Important: the synchronisation must be checked as this might have been damaged following clutch damage.*
Open the gearbox		**Corrective action to be carried out:**
– Check the condition of the synchronisation, synchronisation springs, idle gear and synchroniser ring and the selector rod for the gear(s) concerned. (See MR for vehicle, **21A MANUAL GEARBOX, Manual gearbox: Check**)	not correct →	Replace all of the components of the damaged gear(s) (pinion, hub, selector rod, synchroniser ring and synchronisation spring) (see Technical Note for the gearbox*)

*

Gearbox	Technical Note No.
PA6 - PK5 - PK6	Technical Note 6003A
TL4	Technical Note 6019A
ZF5 S 270 and ZF6 S 350	Technical Note 6016A
PF6 - PK4	Technical Note 6021A
JA3, JH1, JH3, JR5	Technical Note 6029A
ND0	Technical Note 6034A

ALP 12	Banging during power take-up or torque inversion

NOTES	Only consult this customer complaint after a complete check with the diagnostic tool.

VERY IMPORTANT - Preliminary checks:	
– **Engine and transmission assembly suspension points:** Check the tightness and positioning of all of the engine and transmission assembly suspension points (engine tie-bar, engine and/or gearbox hydro-elastic rubber pads) using the centring tool mentioned in the MR concerned (if it exists).	– apply the tightening torques (see MR for vehicle, **19D ENGINE MOUNTING, Suspended engine mounting: Tightening torque**) – recentre (loosen and retighten all of the rubber pads)
– **Axle components:** Check, by comparison, the conformity of the axle components and that they are correctly tightened, in particular: the lower wishbone, anti-roll system, suspension and associated rubber mounting bushes.	– apply the recommended tightening torques (see MR for vehicle, **30A GENERAL INFORMATION, Front axle: Tightening torque**).
– **Subframe/steering rack:** Check the tightness and condition of the subframe and steering rack rubber pads.	– apply the recommended tightening torques (see MR for vehicle, **31A FRONT AXLE COMPONENTS, Front axle subframe: Removal - Refitting**). – only replace the rubber pads if they are extremely worn
– **Stub-axle (Hub-carriers):** Check the tightness of the stub-axles.	– apply the recommended tightening torques (see MR for vehicle, **31A FRONT AXLE COMPONENTS, Front driveshaft hub-carrier: Removal - Refitting) (Important: risk of driveshaft damage**).
– **Wheels:** check the tightness of the wheels.	– apply the tightening torques (see MR for vehicle, **35A WHEELS AND TYRES, Wheel: Removal - Refitting**)

correct

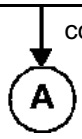

ALP 12 CONTINUED	Banging during power take-up or torque inversion

A

Check the driveshafts:	
– Check the condition of the gaiters and the presence of grease on the gaiter exterior.	– replace the gaiters if they are damaged and/or replace the driveshaft if the gaiters are not sold separately or if there is play on the driveshaft connections (see MR for vehicle, **29A DRIVESHAFTS, Driveshaft: Removal - Refitting**)
– **Removing/refitting the right-hand driveshaft:** Check the wear of the coupling sleeve grooves on the relay bearing driveshaft (right-hand driveshaft - sunwheel) by removing/refitting the component (see MR for vehicle, **29A DRIVESHAFTS, Front right-hand driveshaft: Removal - Refitting**).	– It is essential to follow Infotech No. 4645.

Driveshafts correct

Check the clutch:	
– check the progressiveness of the clutch by checking the clutch clearance, if it exists (see MR for the vehicle, **37A MECHANICAL COMPONENT CONTROLS, Clutch control: Adjustment**) or the automatic pedal adjustment system.	1. Adjust the clearance (if it exists). 2. Replace the automatic adjustment system (see MR for vehicle, **37A MECHANICAL COMPONENT CONTROLS, Clutch control: Removal - Refitting**) 3. If the clutch clearance or the mechanical adjustment system is correct and the clutch progressiveness is still not correct, replace the clutch kit (see MR for the vehicle, **20A CLUTCH, Pressure plate - Disc: Removal - Refitting**)
– Depending on the clutch version, remove the gearbox to: 1) Check that there are no traces of oil. OR 2) Check that the dual-mass flywheel springs are not damaged.	– Depending on the version, if it is in poor condition: 1) If there are traces of oil, look for the source of the leaks and repair. OR 2) Replace the dual-mass flywheel (see MR for vehicle, **20A CLUTCH, Flywheel: Removal - Refitting**)

Clutch correct

– Contact the Techline:
Gearbox concerned - request for approval.

ALP 13	Siren (drive train)

NOTES	Only consult this customer complaint after a complete check with the diagnostic tool.

Check the oil level and grade in the gearbox (see MR for vehicle concerned, **21A MANUAL GEARBOX, Manual gearbox oil: Oil change**):

– if the oil level is low → Top up the level of oil in the gearbox

– check the appearance of the oil
Oil which is dark in colour is not a fault.
Oil which smells burnt is caused by a hot gearbox (insufficient oil level or hard use).
The presence of bronze-coloured rings is not a fault.
The presence of particles of an aluminium colour is an indication that the gearbox is seriously damaged internally

not correct →
– Perform an oil change (using oil specified by the manufacturer).
– If aluminium colour particles are present, replace the gearbox (see MR for vehicle, **21A MANUAL GEARBOX, Manual gearbox: Removal - Refitting**)

oil level and grade correct ↓

Check that all components under the cover are in good condition:

– if there is unwanted gearbox / cable or sheath contact → Correct the unwanted contact

– if the grommets and other bulkhead through-routes are incorrectly fitted → Carry out repairs

under-cover components correct ↓

Check the condition, fitting and conformity of the gearbox mountings (see MR for vehicle concerned, **21A MANUAL GEARBOX, Manual gearbox: Removal - Refitting**):

↓ A

ALP 13 CONTINUED	Siren (drive train)

A

– if the gearbox mountings are damaged or torn	Replace the gearbox mountings
– if the gearbox mountings are not fitted correctly (tightening torques not correct)	Carry out repairs
– if strain on the gearbox mountings	Recentre (loosen and tighten the gearbox mountings)

gearbox mountings correct

Check the fitting, condition and conformity of the gear lever (see MR for vehicle concerned, **37A, MECHANICAL COMPONENT CONTROLS, Mechanical gear control: Adjustment and Gear control unit: Removal - Refitting**):

– if gear lever not correct	Repair the gear lever

gear lever correct

Remove the gearbox (see MR for vehicle concerned, **21A MANUAL GEARBOX, Manual gearbox: Removal - Refitting**)
Repair the gearbox by replacing the gear pairs concerned (see Technical Note for the gearbox concerned *)

*

Gearbox	Technical Note No.
PA6 - PK5 - PK6	Technical Note 6003A
TL4	Technical Note 6019A
ZF5 S 270 and ZF6 S 350	Technical Note 6016A
PF6 - PK4	Technical Note 6021A
JA3, JH1, JH3, JR5	Technical Note 6029A
ND0	Technical Note 6034A

ALP 14	Drive train murmuring

NOTES	Only consult this customer complaint after a complete check with the diagnostic tool.

Check the fitting of the driveshaft relay bearing (see MR for vehicle concerned, **29A, DRIVESHAFTS, Front right-hand wheel driveshaft: Removal - Refitting**)	
– if the bearing plate tightness is not correct	Replace and tighten to torque the plate O-ring
– if bearing category not correct (flange colour)	Replace the bearing
– if fitting not correct (O-ring present without self-aligning bearing)	Realign the assembly
– if the relay bearing is incorrectly tightened on the engine	Retighten to torque
– For PK6 gearboxes, if the direction of fitting of the bearing tightness plate is not correct	Colour on the outer side (see MR for the vehicle concerned, **29A, DRIVESHAFTS, Driveshaft: Precautions for repair**)

driveshaft relay bearing correct

A

ALP 14 CONTINUED	Drive train murmuring

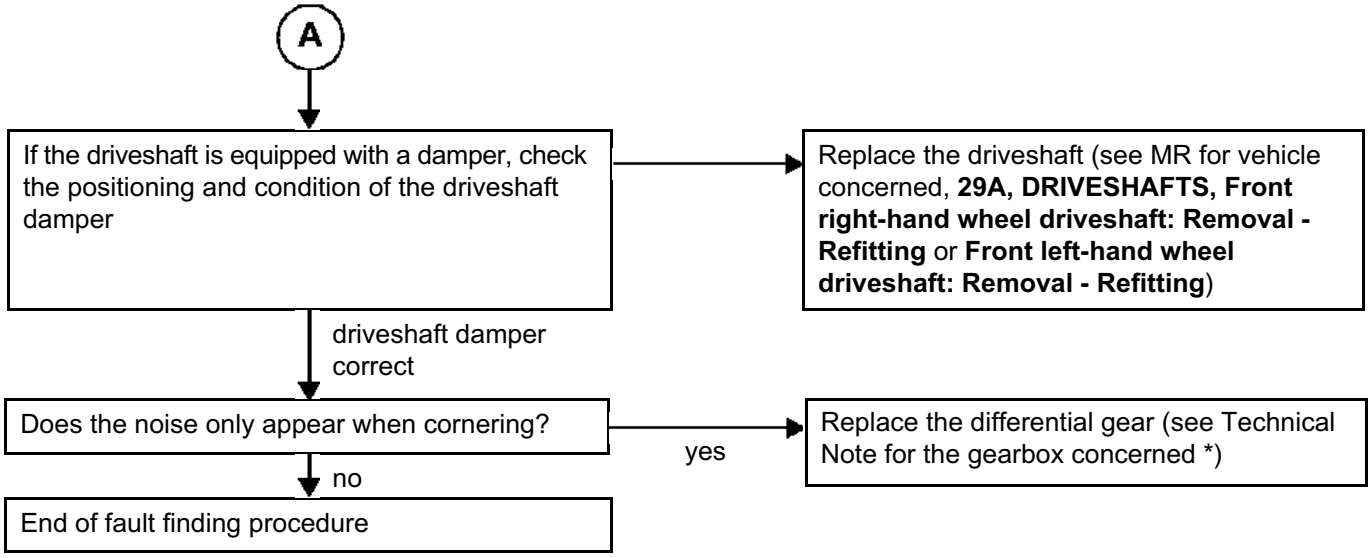

*

Gearbox	Technical Note No.
PA6 - PK5 - PK6	Technical Note 6003A
TL4	Technical Note 6019A
ZF5 S 270 and ZF6 S 350	Technical Note 6016A
PF6 - PK4	Technical Note 6021A
JA3, JH1, JH3, JR5	Technical Note 6029A
ND0	Technical Note 6034A

ALP 15	Growling / noise in neutral (drive train)

NOTES	Only consult this customer complaint after a complete check with the diagnostic tool.

Check the engine idle speed

→ idle speed not correct → Perform fault finding on an incorrect idle speed (see Fault Finding Manual for the vehicle concerned, **13B, DIESEL INJECTION, Fault finding - Conformity check** or **17B, PETROL INJECTION, Fault finding - Conformity check**)

↓ idle speed correct

Check that all components under the cover are in good condition:

- – if there is unwanted gearbox / cable or sheath contact → Correct the unwanted contact
- – if the grommets and other bulkhead through-routes are incorrectly fitted → Carry out repairs
- – if there is interference between the engine and transmission assembly and body components (engine mountings, gearbox mountings, suspended engine mountings, acoustic filters, etc.) → Eliminate the interference by replacing the faulty components

↓ under-cover components correct

If the clutch plate has a shock absorber component, replace the clutch plate (see MR for vehicle concerned, **20A, CLUTCH, Pressure plate - clutch plate: Removal - Refitting**)

ALP 16	Interference noise

NOTES	Only consult this customer complaint after a complete check with the diagnostic tool.

Identification of the noise identified by the customer

↓

Is the origin of the noise known (dealt with by Infotech) or easily identifiable?

yes → Proceed directly to the repair operation

↓ no

Connect the noise diagnostic tool - Part no. **77 11 421 103** - (see **Noise diagnostic tool - Use**) to:
– the steering column,
– the universal joint
Does the noise come from this area?

yes → See ALP 16.1. "Steering column area"

↓ no

Connect the tool to the engine and transmission assembly suspensions
Does the noise come from this area?

yes → See ALP 16.2. "Engine area"

↓ no

Connect the tool to:
– the front shock absorber bump stop
– the front suspension spring
– the front shock absorber
Does the noise come from this area?

yes → See ALP 16.3. "Suspension area"

↓ no

Connect the tool to:
– the steering box
– the track rod end
– the front lower wishbone
– the anti-roll bar tie rod
– the subframe
Does the noise come from this area?

yes → See ALP 16.4. "Subframe area"

↓ no

Is the noise still present?

yes → Contact the Techline.

↓ no

End of fault finding procedure

ALP 16.1	**Interference noise** Noise in the "steering column area"

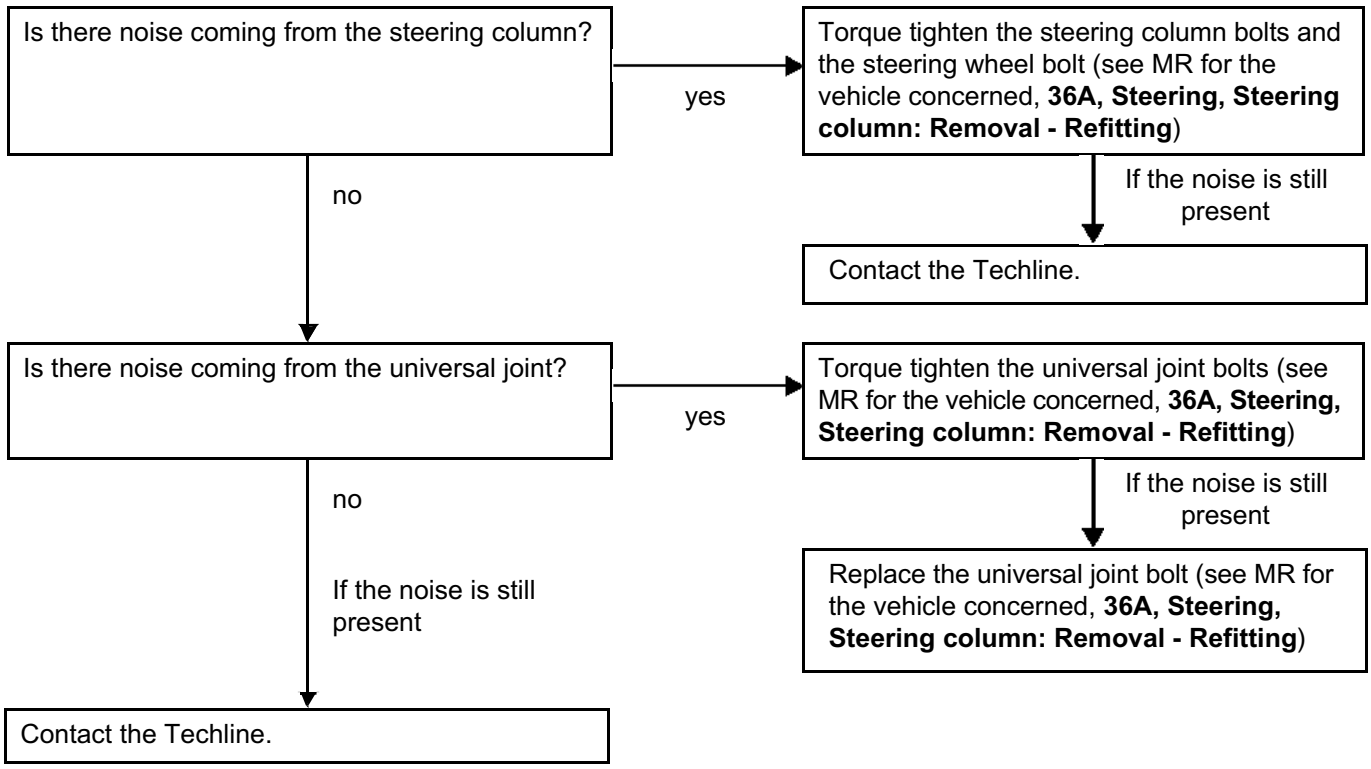

ALP 16.2	**Interference noise** Noise in the "engine area"

Is there noise coming from the engine and transmission assembly suspensions?

no → Contact the Techline.

yes ↓

Check the tightness and positioning of all of the engine and transmission assembly suspension points:
- engine tie-bar,
- engine and/or gearbox hydro-elastic rubber pads,

using the centring tool described in the MR concerned (if it exists).

Correct →
- apply the tightening torques (see MR for vehicle, **19D ENGINE MOUNTING, Suspended engine mounting: Tightening torque**)
- recentre (loosen and retighten all of the rubber pads)

If the noise is still present ↓

Replace the universal joint bolt

correct

If the noise is still present ↓

Contact the Techline.

ALP 16.3	**Interference noise** Noise in the "suspension area"

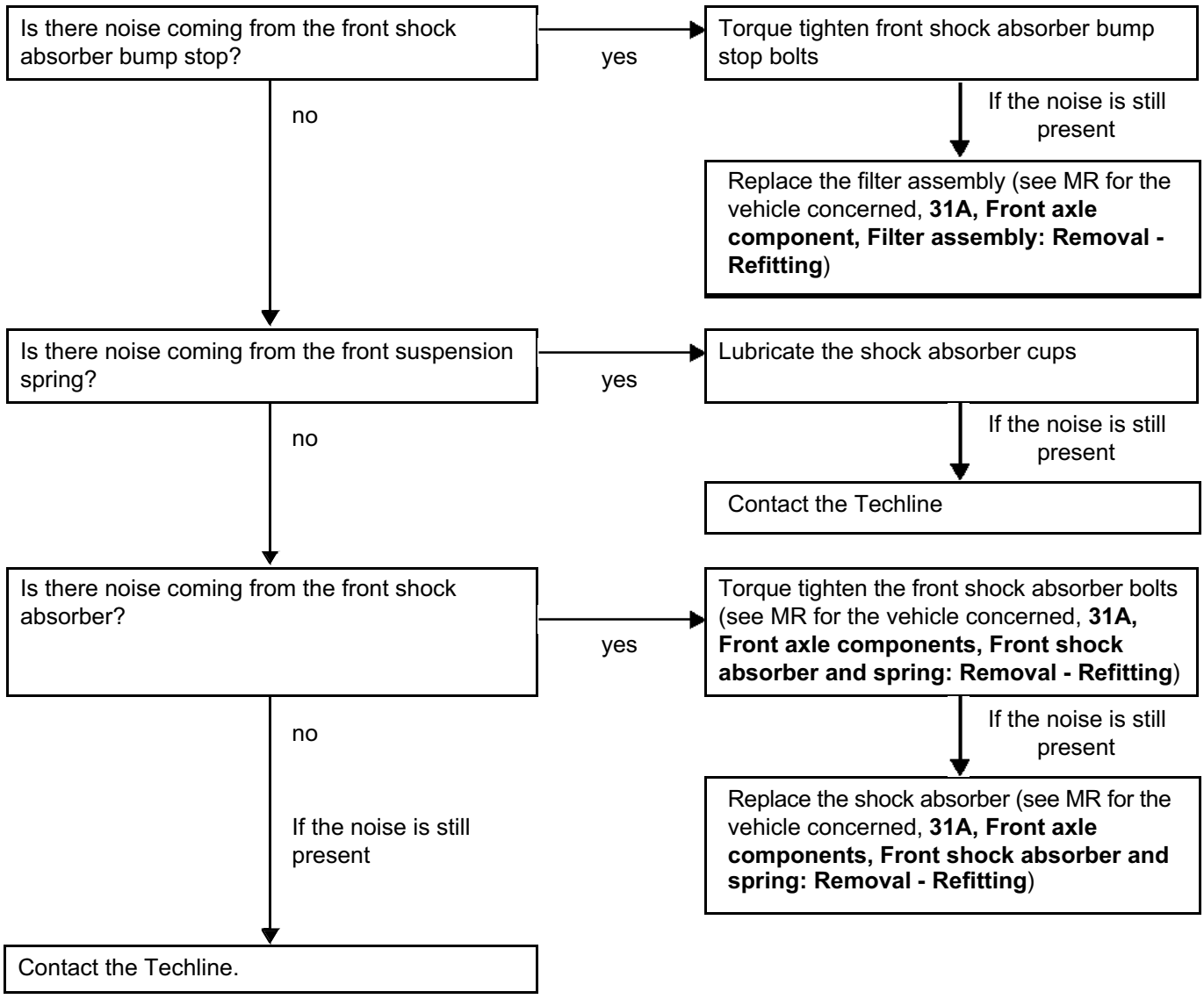

ALP 16.4	**Interference noise** Noise in the "subframe area"

Is there noise coming from the steering box?

yes → Replace the steering box (see MR for the vehicle concerned, **36A, Steering, Steering box: Removal - Refitting**)

no ↓

Is there noise coming from the track rod end?

yes → Replace the track rod end (see MR for the vehicle concerned, **36A, Steering, Track rod: Removal - Refitting**)

no ↓

Is there noise coming from the front suspension wishbone?

yes → Check the suspension lower ball joint (see MR for the vehicle concerned, **31A, Front axle components, Front driveshaft lower arm ball joint: Check**)

If the noise is still present ↓

Torque tighten the front suspension wishbone bolts (see MR for the vehicle concerned, **31A, Front axle components, Front driveshaft lower arm: Removal - Refitting)**

If the noise is still present ↓

Replace the front suspension wishbone (see MR for the vehicle concerned, **31A, Front axle components, Front driveshaft lower arm: Removal - Refitting**)

no ↓

Is there noise coming from a front anti-roll bar tie rod?

yes → Torque tighten the anti-roll bar tie rod bolts (see MR for the vehicle concerned, **31A, Front axle components, Front anti-roll bar: Removal - Refitting**)

If the noise is still present ↓

Replace the anti-roll bar tie rod (see MR for the vehicle concerned, **31A, Front axle components, Front anti-roll bar: Removal - Refitting**)

no ↓

Is there noise coming from the subframe?

yes → Torque tighten all of the components fixed to the subframe (see MR for the vehicle concerned, **31A, Front axle components, front axle subframe: Removal - Refitting**)

no ↓

If the noise is still present ↓

Contact the Techline.

ALP 17	Crackling from the speakers

NOTES	Only consult this customer complaint after a complete check with the diagnostic tool.

Ensure that there are no foreign bodies present in the passenger compartment.
Check that no parts are broken.
Switch on the sound system and adjust it as follows:
– volume slightly raised
– bass level set at MEDIUM
– treble level set at MEDIUM
Insert a CD or audio cassette which has strong bass tones.

Check the mounting of the speaker grille:		
if the grille is clipped onto the speaker	not correct →	Clip the grille onto the speaker Replace the speaker grille if the clip is broken*
if the grille is screwed onto the speaker	not correct →	Tighten the speaker grille screws* Add any missing screws*
if the grille is clipped onto the trim	not correct →	Clip the grille onto the trim Replace the grille if the clip is broken*
if the grille is bonded onto the trim	not correct →	Bond the grille onto the trim*

*: See MR for the vehicle concerned, **72A, Side opening element trim, Front side door trim: Removal - Refitting**) or (see MR for the vehicle concerned, **72A, Side opening element trim, Rear side door trim: Removal - Refitting**)

A

ALP 17 CONTINUED	Crackling from the speakers

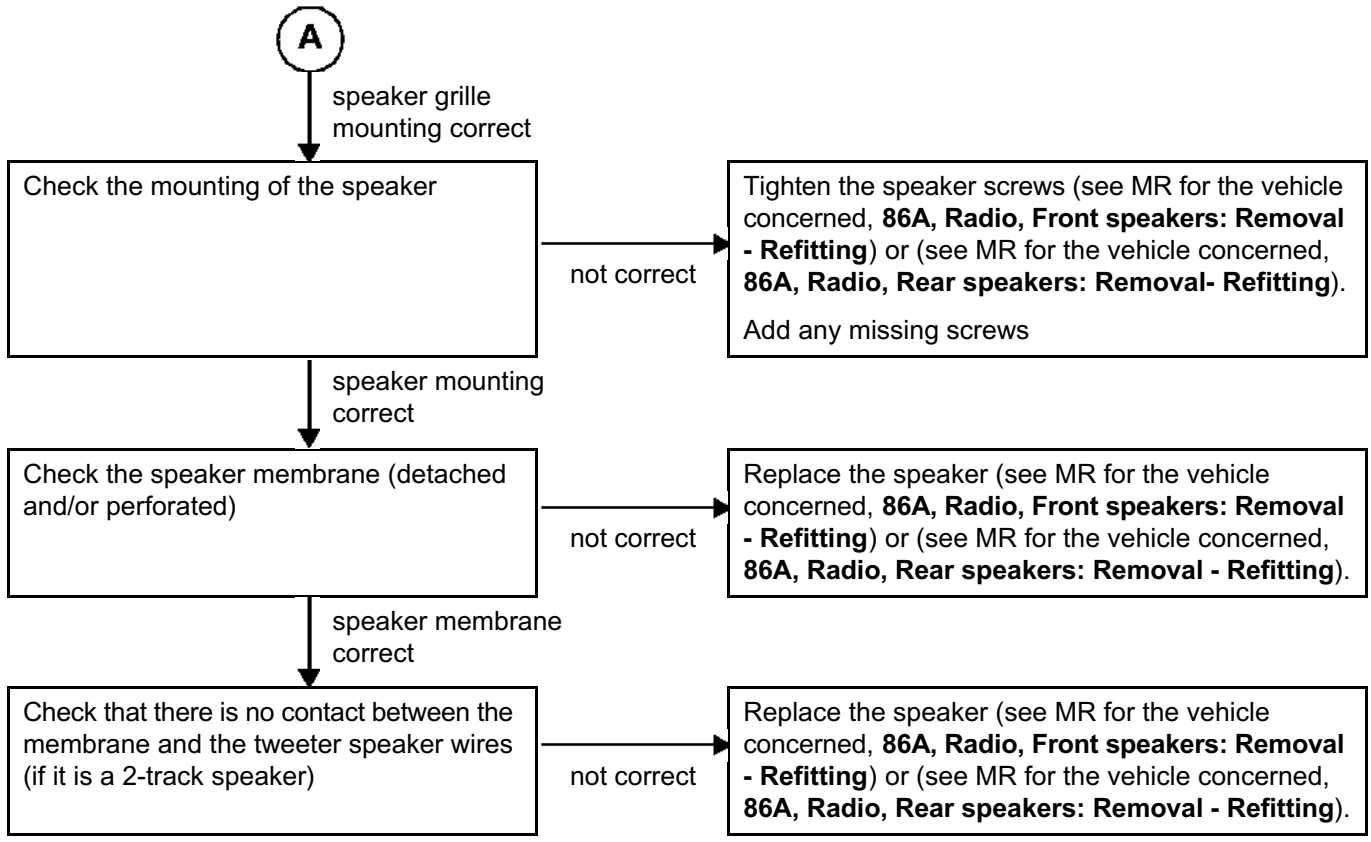

ALP 18	Noise from the dashboard

NOTES	Only consult this customer complaint after a complete check with the diagnostic tool.

Start by checking the following points:

● **When stationary, engine not running.**

– Empty all of the storage compartments in the dashboard and doors.
– Ensure that there are no foreign bodies present in the passenger compartment.
– Check that no parts are broken
– Test all of the storage compartment covers and flaps and air vent grilles (catches, hinges, play, etc.)
– Check all of the dashboard trims, visors and clipped front panels (tactile inspection that the parts are secure).
– Visually check for the presence of the bolts

? It is essential to replace all of the faulty components (fasteners, clips, air vent grilles).

● **When stationary, engine running.**

– Accelerate slightly to detect any vibration of the trims and front panels clipped onto the dashboard.
– Test the heating distribution at different speeds to detect any foreign bodies in the heating ducts (air vent vanes, dead leaves, etc.).

? It is essential to replace any faulty component (fasteners, clips, air vent grilles, etc.).

● **Operational or road test in accordance with the customer complaint.**
(Different speeds, cobbled surface, with or without ventilation or heating system, etc.).

⇓

When all of these checks have been carried out and the fault is still present, proceed to the following step

ALP 18 CONTINUED 1	Noise from the dashboard

Check that no parts are broken.
It is essential to consult the Repair Manual for the vehicle concerned in order to observe the safety advice and recommended tightening torques.
After each operation, carry out a vehicle test to check that the vehicle has been repaired.

Check the operation of the storage flaps and covers.
Visually and manually inspect the joint play.

not correct → Replace any faulty parts (see MR for vehicle concerned, **57A, INTERIOR EQUIPMENT**)

correct ↓

Check the centre and side air vent grilles.
Visually inspect if any components are missing and the clearance between the air vent vanes.

not correct → Replace the faulty parts (see MR for vehicle concerned, **57A, INTERIOR EQUIPMENT**)

correct ↓

Check that the covers, front panels, trim pieces and A-pillar trims are clipped on correctly.
Visually and manually inspect if any components are missing (bolts, clips, etc.) and check the clearance between the components.

not correct → Replace the faulty parts or clips (see MR for vehicle concerned, **57A, INTERIOR EQUIPMENT**)
or
Eliminate the rubbing noise between the components using foam or felt*

correct ↓

A

- *adhesive foam: **77 05 042 163**
- *adhesive foam: **77 05 042 122**
- *adhesive felt: **82 00 281 967**

ALP 18 CONTINUED 2	Noise from the dashboard

(A)

Carry out a road test in order to reproduce the customer complaint and locate the cause of the noise, using a second person if necessary.

not correct → Replace the faulty parts or clips (see MR for vehicle concerned, **57A, INTERIOR EQUIPMENT**)
or
Eliminate the rubbing noise between the components using foam or felt*

correct ↓

Remove some of the dashboard components (glovebox, lower covers, visor, front panels, etc.) depending on the approximate location of the noise and carry out a road test in order to recreate the customer complaint.
It may be a matter of a poorly attached part or some wires rubbing behind the dashboard.

not correct → Replace the faulty parts or clips (see MR for vehicle concerned, **57A, INTERIOR EQUIPMENT**)
or
Eliminate the rubbing noise between the components using foam or felt*

correct ↓

Check the adjustment of the dashboard or the dashboard cross member, check the position of the dashboard wiring and carry out a road test in order to reproduce the customer complaint. It may be a matter of the dashboard or cross member being poorly adjusted.

not correct → Adjust the dashboard or the dashboard cross member (see MR for the vehicle concerned, **57A, INTERIOR EQUIPMENT**, Dashboard cross member: Removal - Refitting)
or
Eliminate the rubbing noise between the components using foam or felt*

- *adhesive foam: **77 05 042 163**
- *adhesive foam: **77 05 042 122**
- *adhesive felt: **82 00 281 967**

ALP 18 CONTINUED 3	Noise from the dashboard

IMPORTANT:
It is essential to consult the MR for the vehicles concerned in order to observe the safety advice related to airbag locking.

Any parts connected to the dashboard body, (clipped, fitted and screwed parts) could potentially create noise (see parts below).

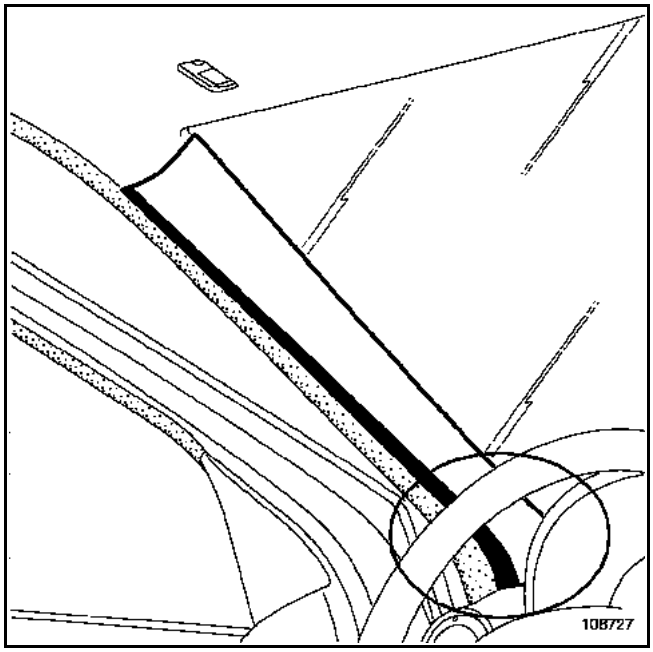

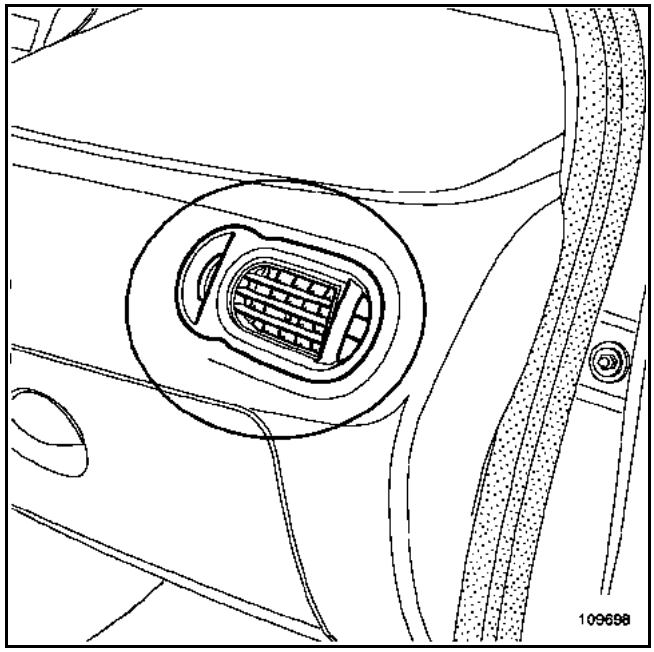

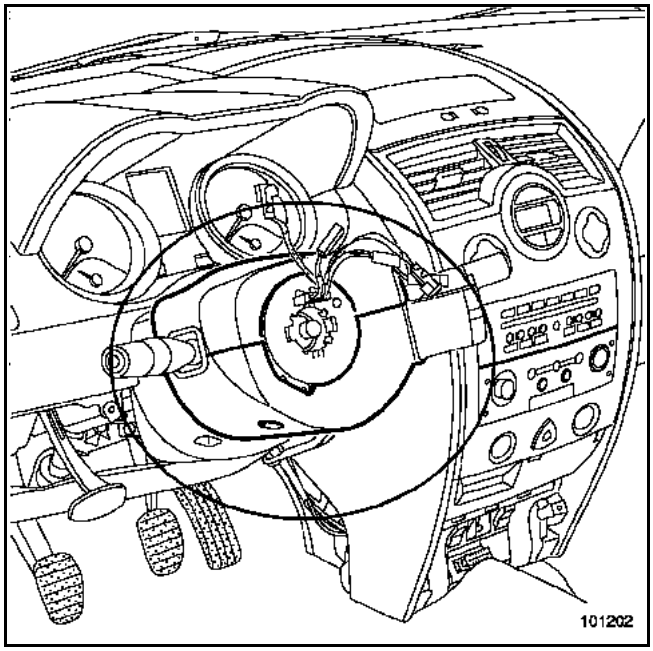

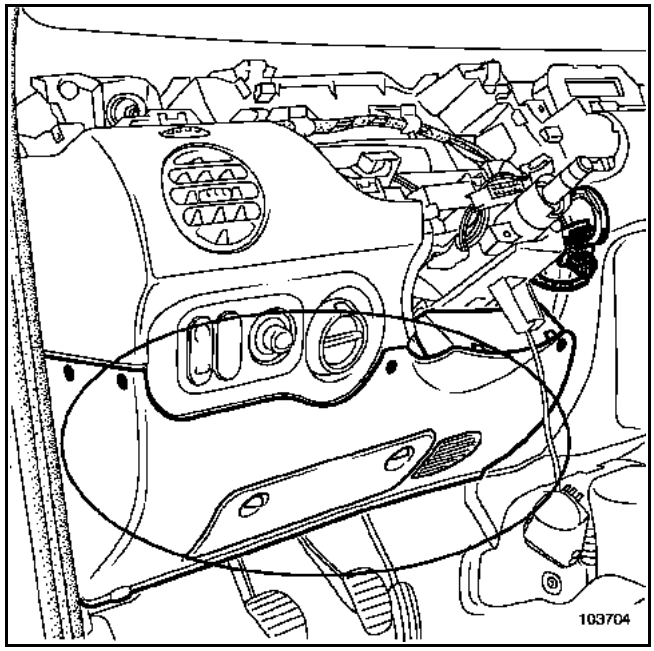

ALP 18 CONTINUED 4	Noise from the dashboard

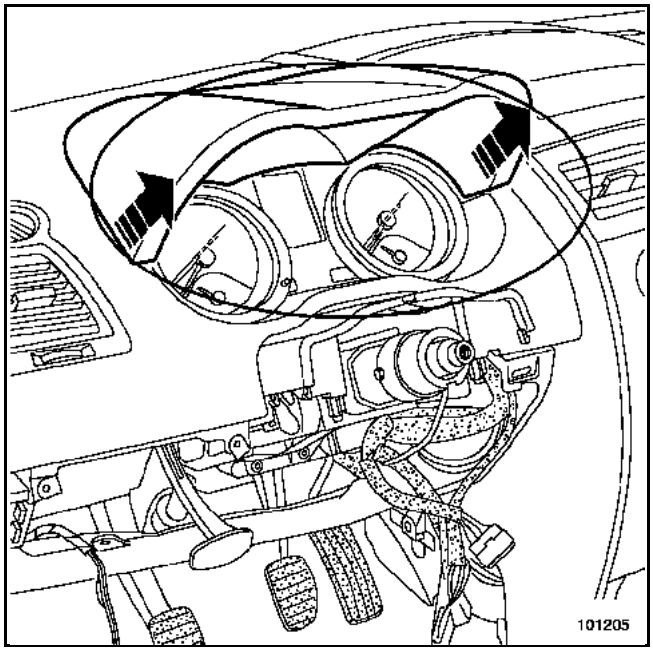

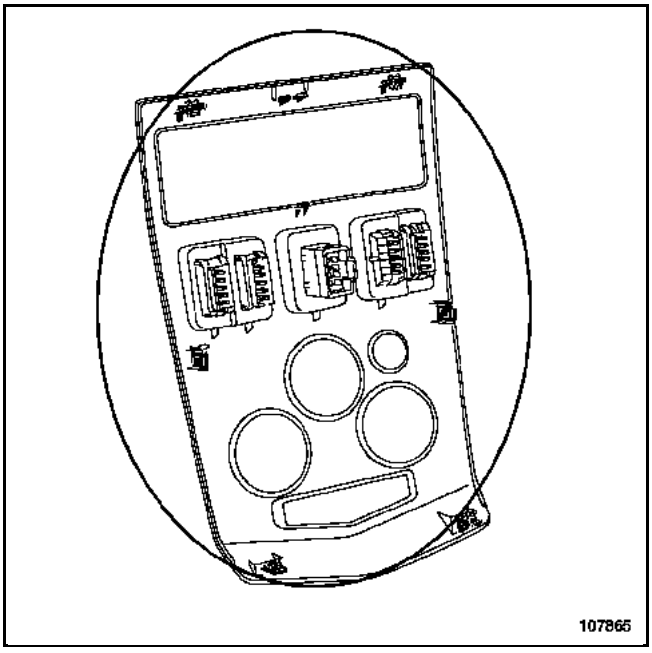

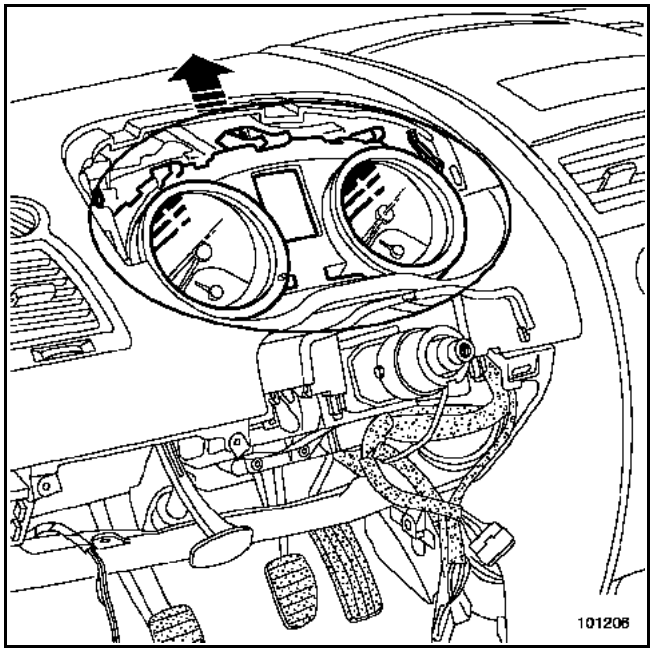

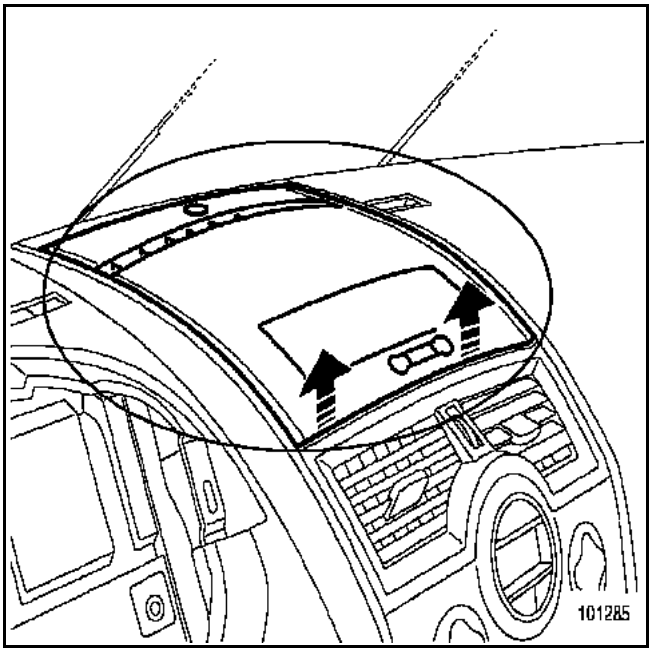

ALP 18 CONTINUED 5	Noise from the dashboard

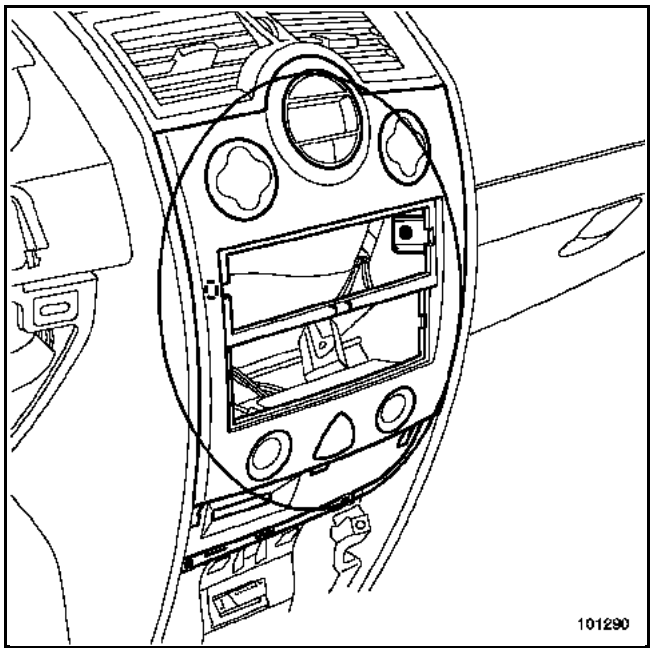

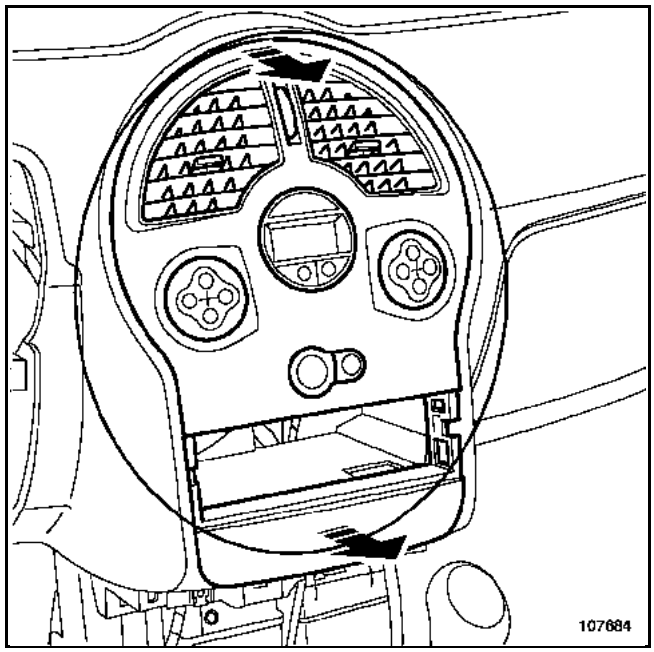

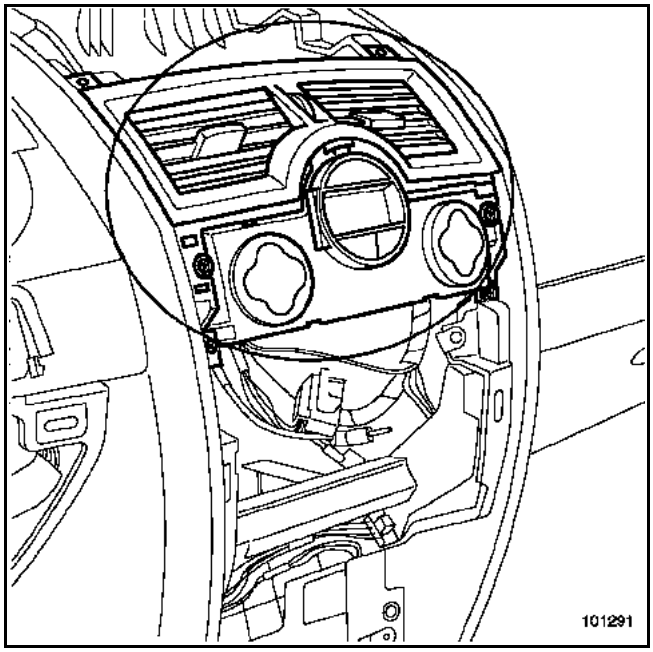

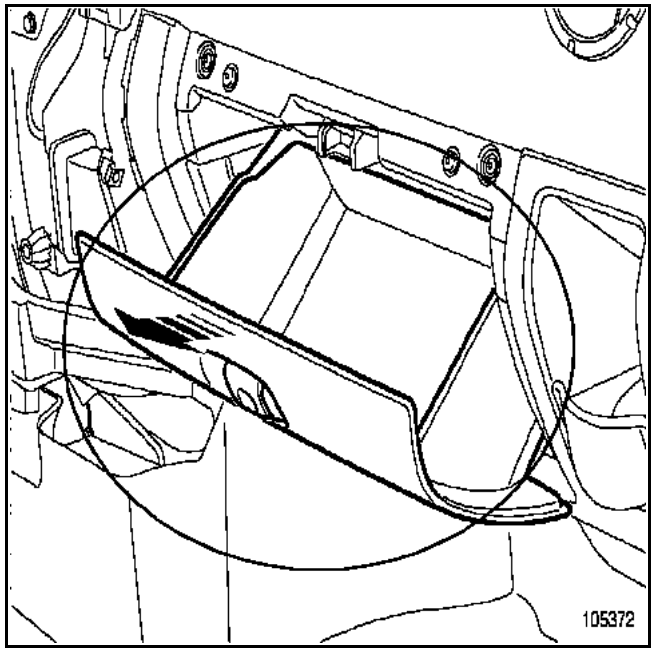

ALP 19	Noise from the upholstery

NOTES	Only consult this customer complaint after a complete check with the diagnostic tool.

Manually check that the seatback is secured correctly to the seat base and that the seat base is secured correctly to the runners.
- not correct → Retighten the mountings to torque if necessary. (see MR for vehicle concerned, *)
- correct ↓

Use a torque wrench to check the seat mountings in the vehicle. (Fig. 3)
- not correct → Retighten the mountings to torque if necessary. (see MR for vehicle concerned, *)
- correct ↓

Test the clearance between the headrest and its guides. (Fig. 2)
- not correct → Replace the defective part. (see MR for vehicle concerned, *)
- correct ↓

Test the clearances of all of the seat controls.
- not correct → Replace the defective part. (see MR for vehicle concerned, *)
- correct ↓

A

*
75A, FRONT SEAT FRAMES AND RUNNERS
76A, REAR SEAT FRAMES AND RUNNERS
77A, FRONT SEAT TRIMS
78A, REAR SEAT TRIMS

ALP 19 CONTINUED 1	Noise from the upholstery

A

Remove the seat from the vehicle, place it on a work surface and shake it in order to locate the noise. (Fig. 3).
- not correct → Replace the defective part. (see MR for vehicle concerned, *)
- correct ↓

Remove the seat casing and covers and check that the accessories are securely positioned (cables, airbags, seat belt buckles, mechanisms, motors, etc.) (Fig 2)
- not correct → Replace the defective part. (see MR for vehicle concerned, *)
- correct ↓

Check the tightness of the seatbase/backrest frame mountings (Fig 4)
- not correct → Retighten the mountings to torque if necessary. (see MR for vehicle concerned, *)
- correct ↓

Refit the removed parts, ensuring that the faulty mountings and clips are replaced.
- not correct → Replace the defective part. (see MR for vehicle concerned, *)

*
75A, FRONT SEAT FRAMES AND RUNNERS
76A, REAR SEAT FRAMES AND RUNNERS
77A, FRONT SEAT TRIMS
78A, REAR SEAT TRIMS

ALP 19 CONTINUED 2	Noise from the upholstery

Notes: before reading the ALP.

Fig. 1

Carry out an operational test on the seat

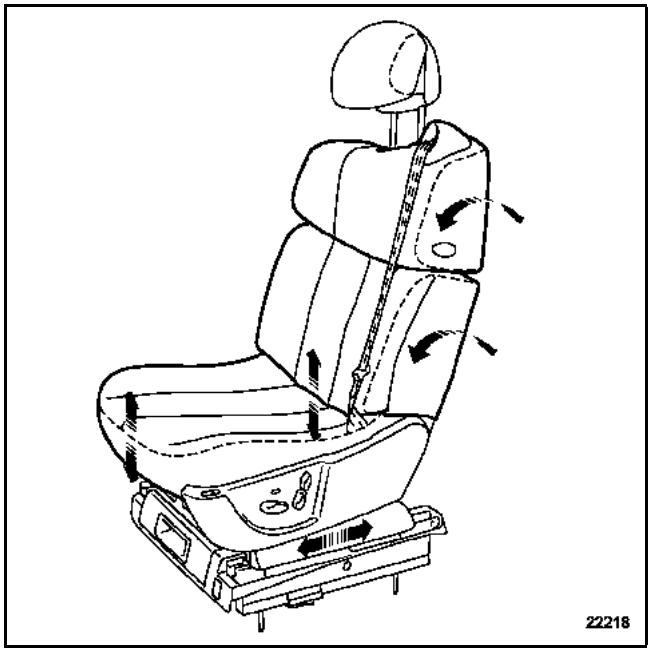

ALP 19 CONTINUED 3	Noise from the upholstery

Fig. 2

Check the resistance and mountings of the casings, control levers, headrest and guides, rear parcel shelf, etc.

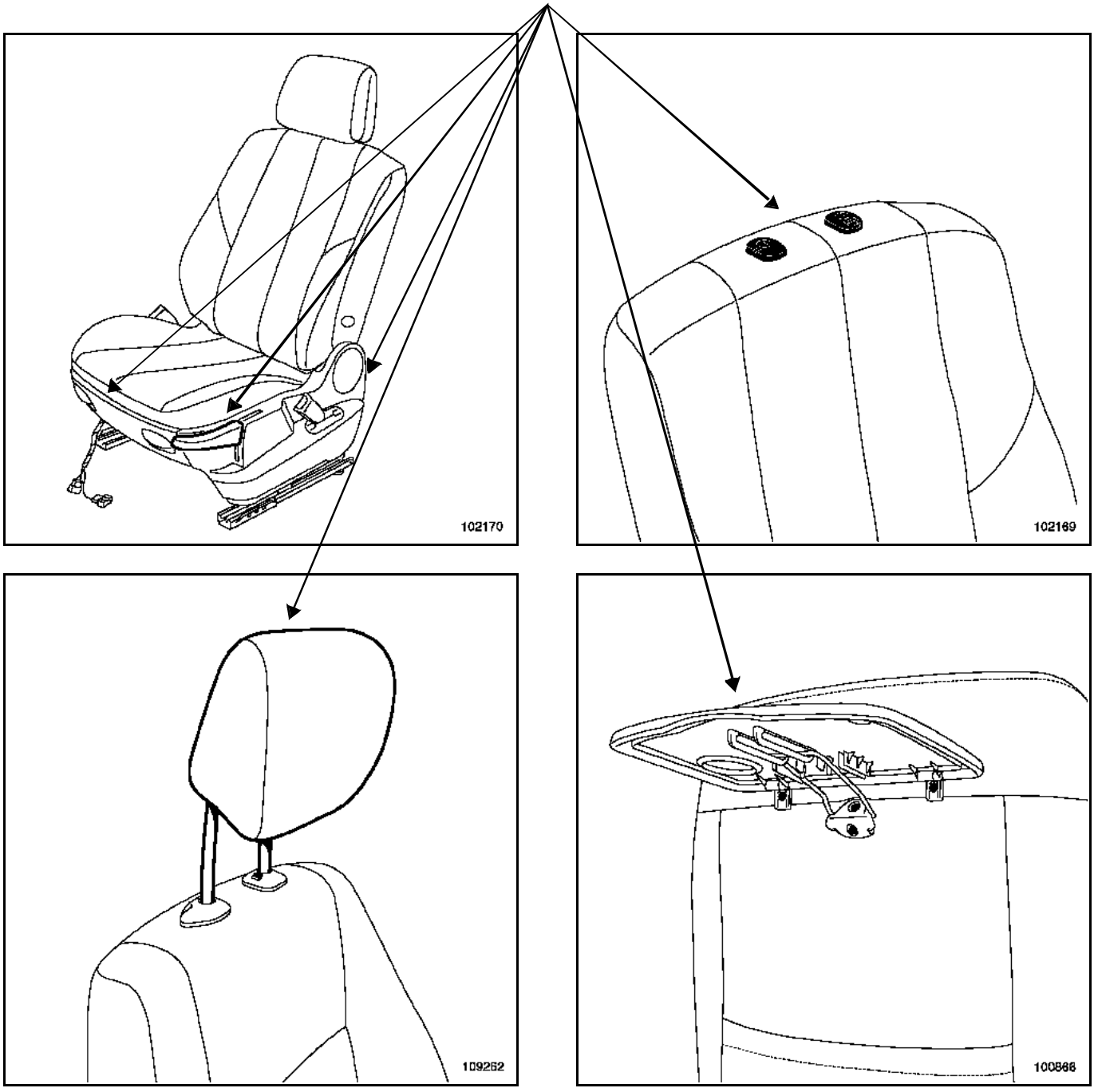

ALP 19 CONTINUED 4	Noise from the upholstery

Fig. 3

A seat can either be removed from underneath the vehicle or from the vehicle interior:

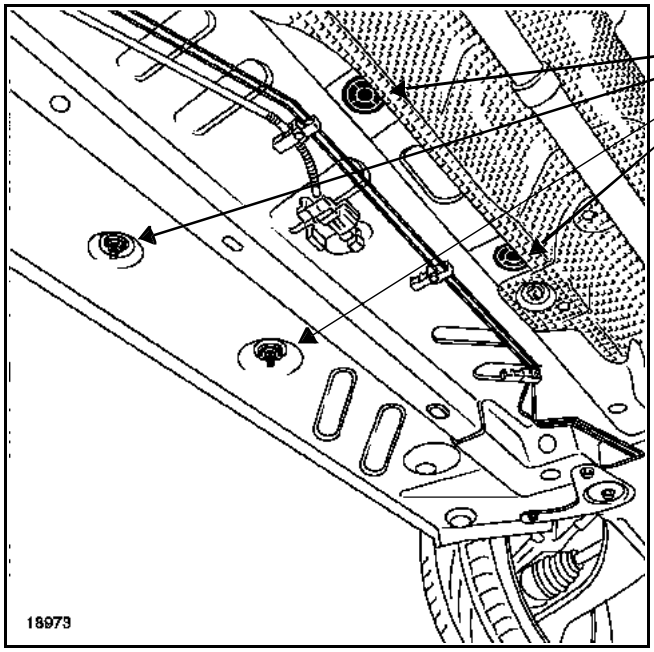

Mountings underneath the vehicle

Mountings inside the vehicle

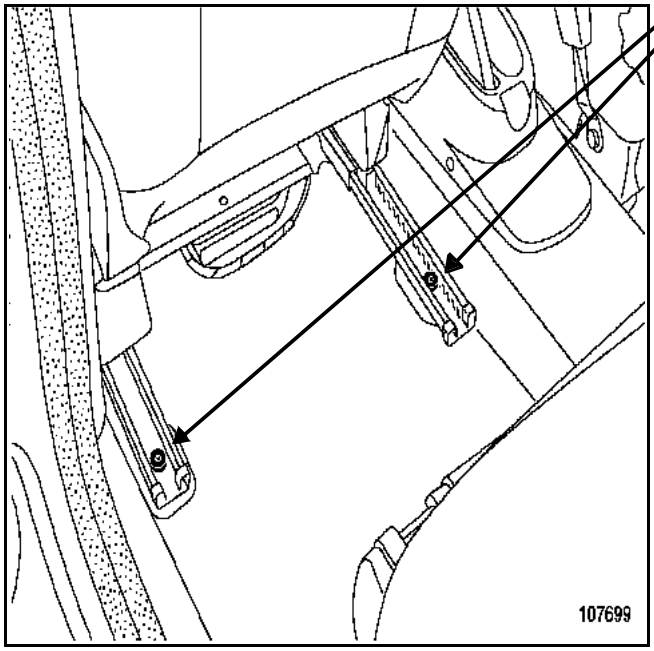

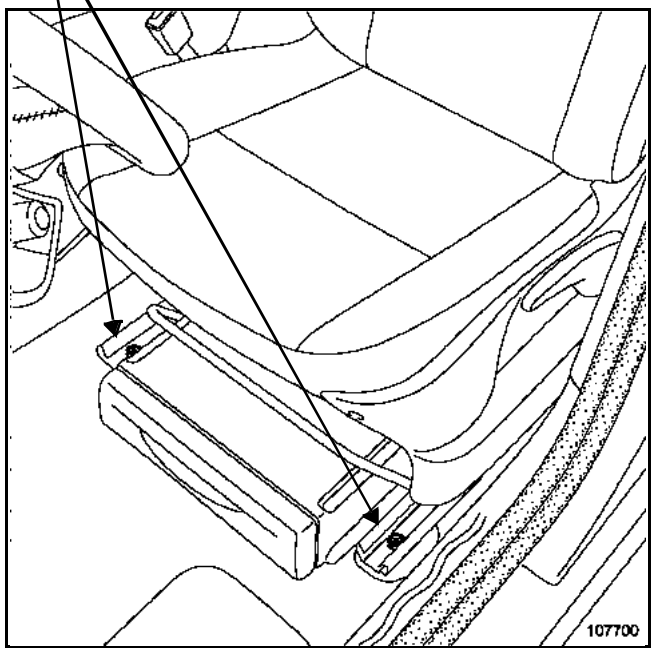

ALP 19 CONTINUED 5	Noise from the upholstery

Fig. 4

The frame mountings to be checked include:

Seat base/backrest frame mountings and runners/seat base mountings

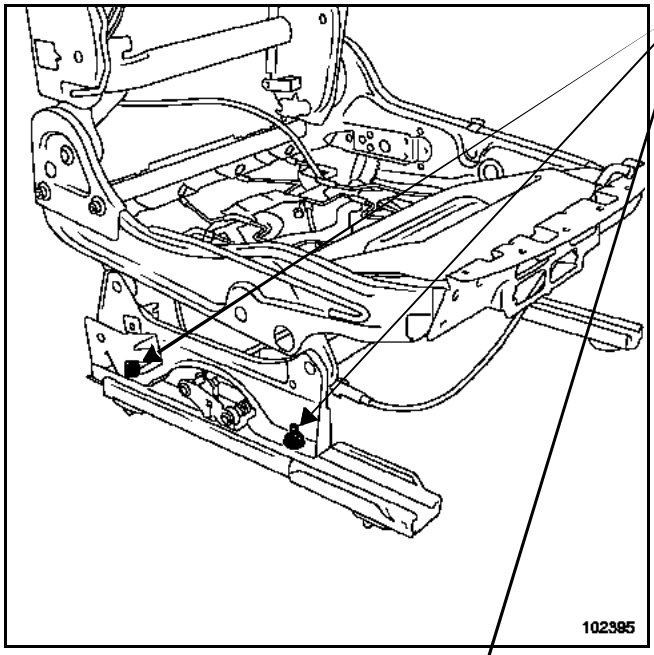

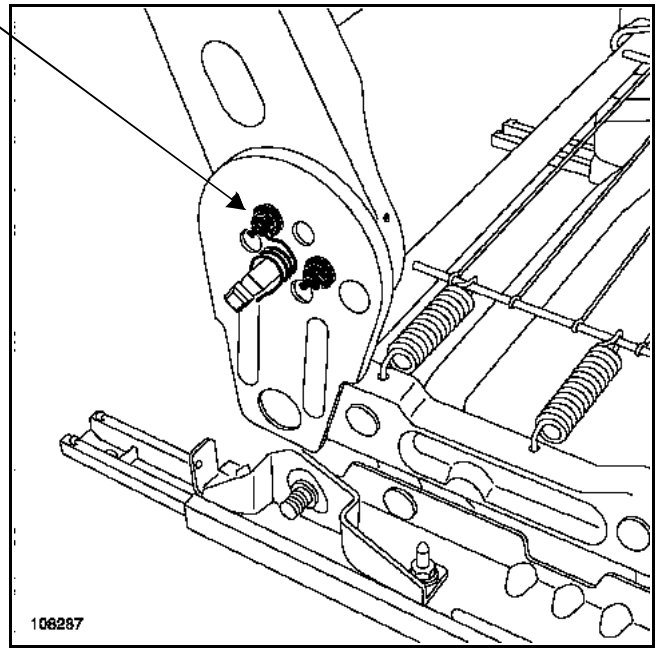

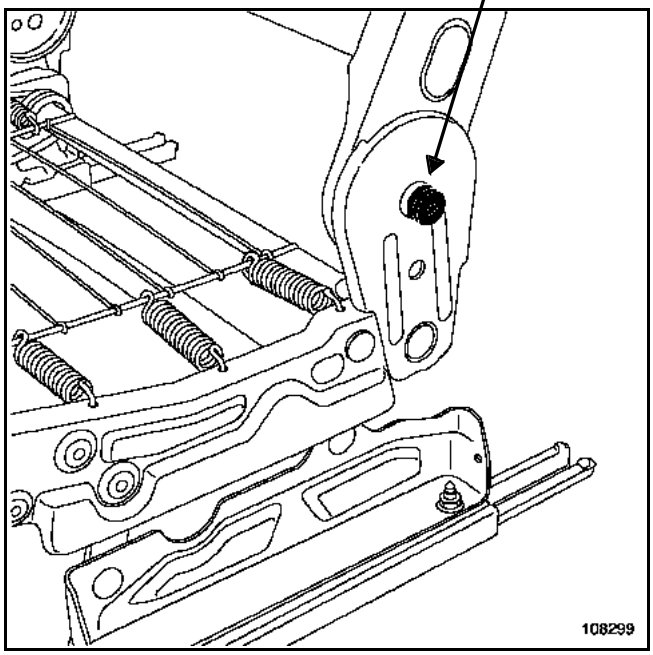

Consult the MR in order to respect the recommended tightening torques.

ALP 20	Noise when window is operated (squeaking/creaking)

NOTES	Only consult this customer complaint after a complete check with the diagnostic tool.

Consult the ICM database and check the conformity of the vehicle.
Visually inspect the vehicle:
– exterior cleanliness,
– no foreign bodies present
– no parts are loose, damaged or broken.

After the operation, check that the operation was successful by performing an operational test or road test.

Check that the runners* and the window winder drum are lubricated correctly

not correct → Clean the window winder (using a lint-free cloth soaked in heptane, Part no. 77 11 170 064), and lubricate the runners* and the window winder drum (mechanism lubricant: Part no. 77 11 419 865), removing the window winder mechanism if necessary (see MR for the vehicle, **51A, SIDE OPENING ELEMENT MECHANISMS, Front or rear manual or electric window mechanism: Removal - Refitting**)

correct ↓

Check the cleanliness and wear of the exterior weatherstrip* and/or the glass run channel*.

not correct → Remove the exterior weatherstrip* and/or the glass run channel* (see MR for vehicle, **66A WINDOW SEALING, Front or rear door exterior weather strip: Removal - Refitting** and **66A WINDOW SEALING, Front or rear door glass run channel: Removal - Refitting**)

1) Clean the exterior weatherstrip* and/or the glass run channel* using a flexible brush and soapy water (under no circumstances must abrasive soap be used).

2) If the first operation is not successful, replace the weatherstrip* and/or the window channel*.

*: see the illustrations on the following page

ALP 20 CONTINUED	Noise when window is operated (squeaking/creaking)

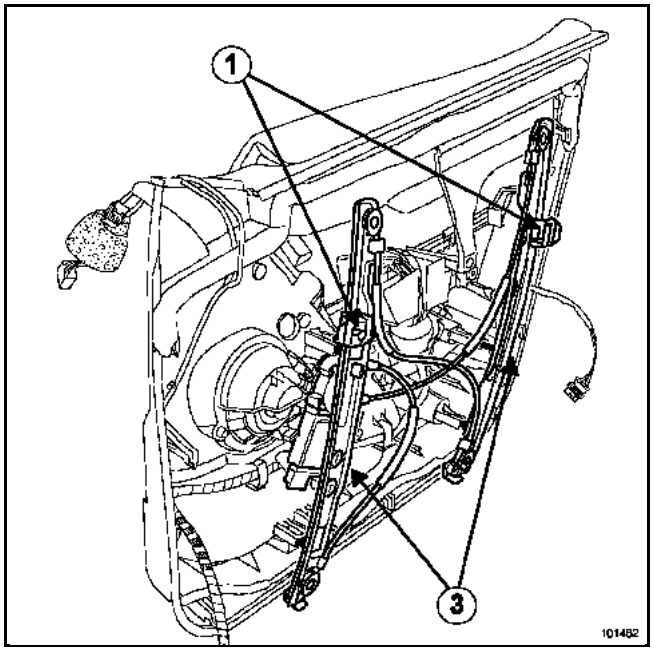

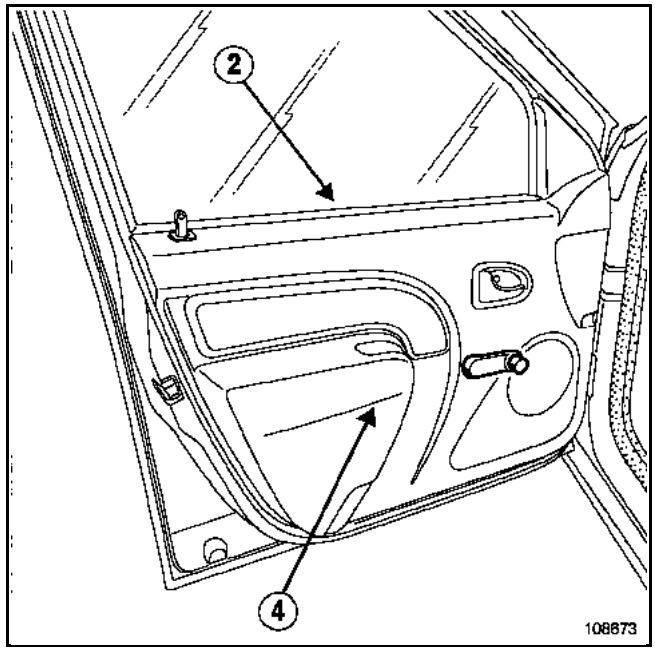

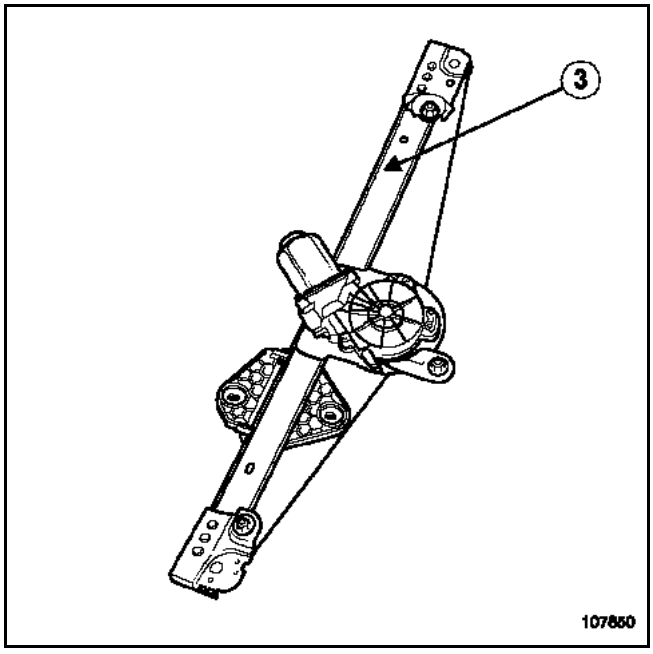

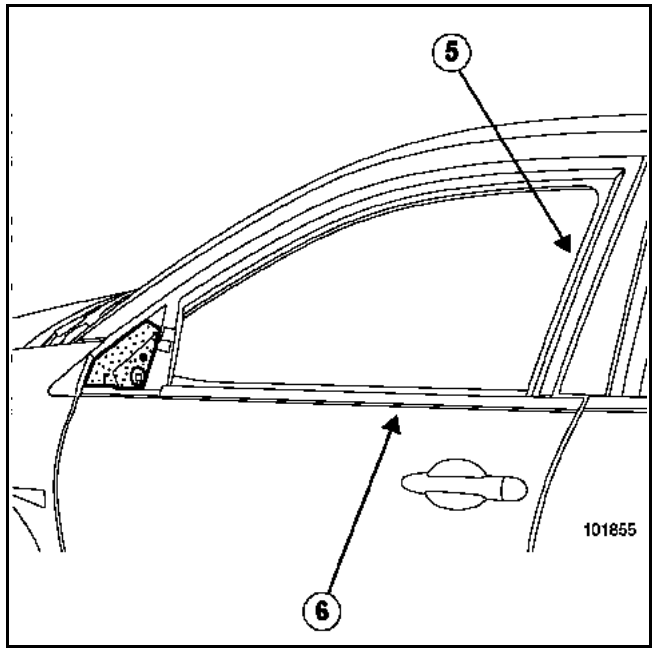

1 Window winder sliders
2 Interior weatherstrip
3 Window winder mechanism runners
4 Interior door trim
5 Glass run channel
6 Exterior weatherstrip

ALP 21	Noise when window is operated (scratching)

NOTES	Only consult this customer complaint after a complete check with the diagnostic tool.

Consult the ICM database and check the conformity of the vehicle.
Visually inspect the vehicle:
– exterior cleanliness,
– no foreign bodies present
– no parts are loose, damaged or broken.

After the operation, check that the operation was successful by performing an operational test or road test.

↓

Check that the internal section of the slide* is not damaged.

→ not correct

1) Use the CAR 1363 special tool to realign the damaged section.

2) If the first operation is not successful, replace the glass run channel*. (see MR for the vehicle, **66A WINDOW SEALING, Front or rear door glass run channel: Removal - Refitting**)

*: see illustrations in ALP: Noise when window is operated (squeaking / creaking)

ALP 22	Noise from the window when closing the door (rattling)

NOTES	Only consult this customer complaint after a complete check with the diagnostic tool.

Consult the ICM database and check the conformity of the vehicle.
Visually inspect the vehicle:
– exterior cleanliness,
– no foreign bodies present
– no parts are loose, damaged or broken.

After the operation, check that the operation was successful by performing an operational test or road test.

Check that the interior * and/or exterior weatherstrip* are correctly positioned.

not correct → 1) Reposition the interior* and/or exterior* weatherstrips.
2) If the first operation is not successful, replace the weatherstrip* on the front or rear door. (see MR for vehicle, **66A WINDOW SEALING, Front or rear side door exterior weatherstrip: Removal - Refitting** or **Front or rear side door trim: Removal - Refitting**).

correct ↓

Check that the internal section of the slide* is not damaged.

not correct → 1) Use the CAR 1363 special tool to realign the damaged section.
2) If the first operation is not successful, replace the glass run channel*. (see MR for the vehicle, **66A WINDOW SEALING, Front or rear door glass run channel: Removal - Refitting**)

correct ↓

Check the play of the window winder slider* in relation to the window (check that no noise can be detected)

not correct → Fit a square piece of foam between the window and the window winder slider*
Part no.: 77 05 042 122

*: see illustrations in ALP: Noise when window is operated (squeaking / creaking)

ALP 23	Sunroof chattering: jerky movement when opening/closing sunroof mobile panel

NOTES	Only consult this customer complaint after a complete check with the diagnostic tool.

Consult the ICM database and check the conformity of the vehicle.
Check the tyre pressures.
Visually inspect the vehicle:
– exterior cleanliness,
– no foreign bodies in the sunroof side runners,
– no parts are broken.

After the operation, check that the operation was successful by performing an operational test or road test.

↓

Check the operation of the mobile panel* by initialising the sunroof motor, with the vehicle's engine running (see fault finding MR for vehicle, **87D ELECTRIC WINDOW - SUNROOF, Electric sunroof: Initialisation**)

↓ correct

Check the cleanliness of the side runners*

not correct → Clean the internal and external side runners* and, depending on the vehicle, only lubricate the internal side runners* or the external side runners* without removing the sunroof mobile panel (see MR for the vehicle, **52A NON-SIDE OPENING ELEMENT MECHANISMS, Sunroof mobile panel: Removal - Refitting**)

↓ correct

Check the condition of the mobile panel linkages*

not correct → Remove the mobile panel* and replace the runners and/or the mobile panel linkages. (see MR for vehicle, **52A NON-SIDE OPENING ELEMENT MECHANISMS, Sunroof mobile panel: Removal - Refitting**)

↓ correct

Check that the mobile panel* slides correctly (no jerky movement)

not correct → Replace the sunroof* motor. (see MR for vehicle, **52A NON-SIDE OPENING ELEMENT MECHANISMS**, or **87D ELECTRIC WINDOWS - SUNROOF, Sunroof opening motor: Removal - Refitting**)

↓ correct

Check the conformity of the sunroof* (damaged runners, operating mechanism, etc.)

not correct → Replace the sunroof*. (see MR for vehicle, **52A NON-SIDE OPENING ELEMENT MECHANISMS, Sunroof operating mechanism: Removal - Refitting**).

*: see the illustrations on the following page

ALP 23 CONTINUED 1	Sunroof chattering: jerky movement when opening/closing sunroof mobile panel

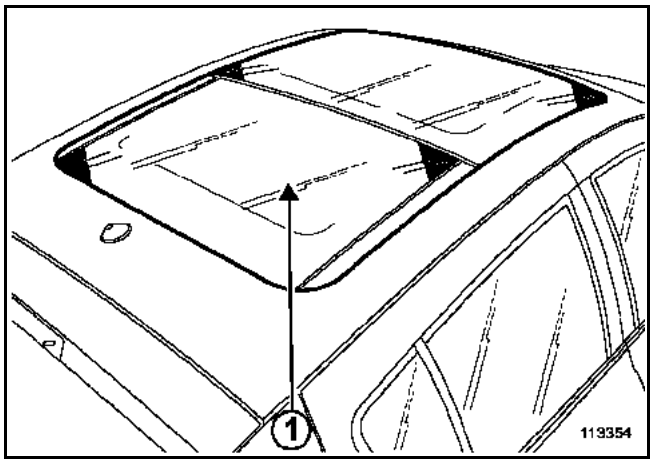

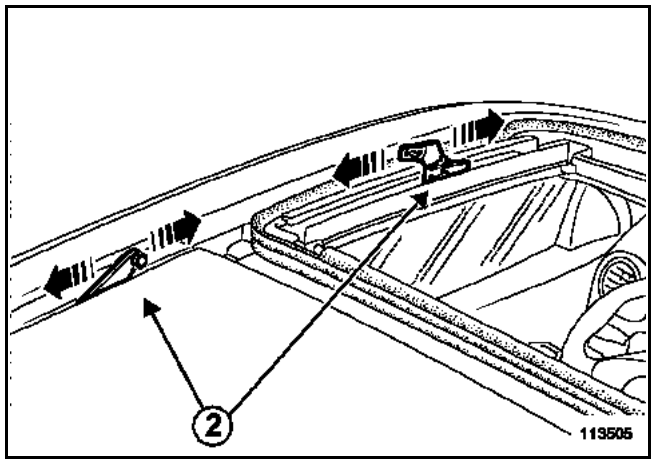

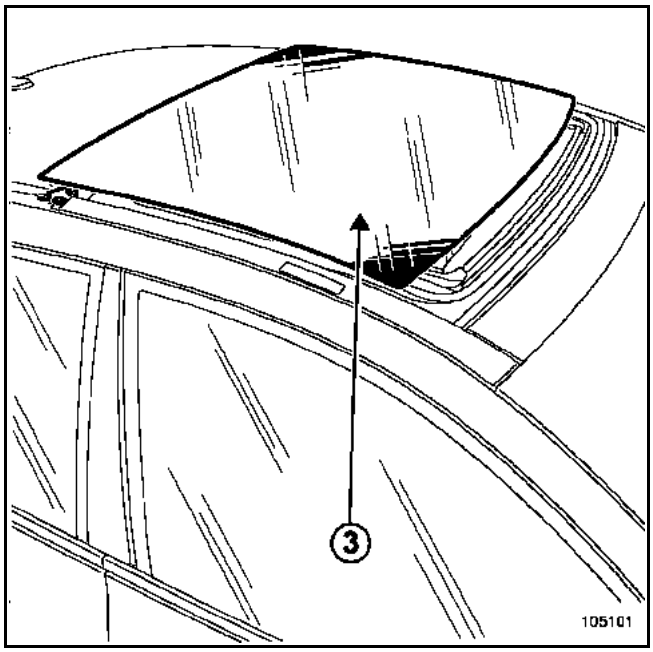

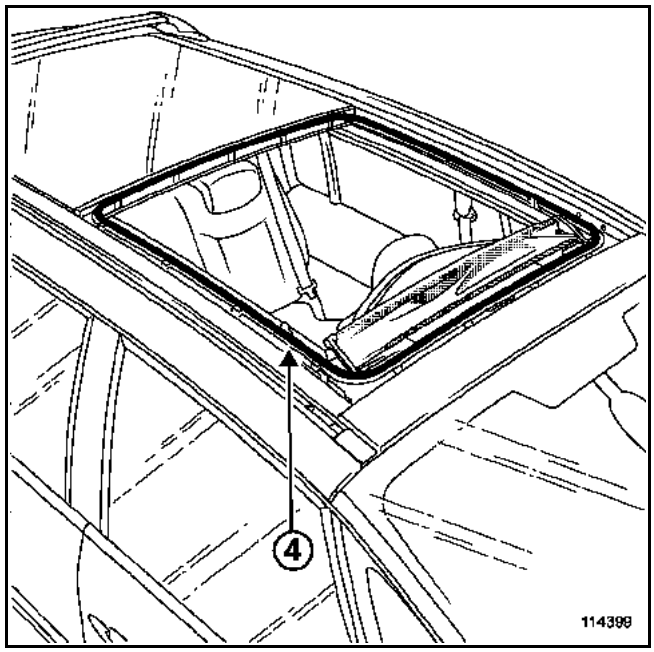

1 Sunroof operating mechanism (sunroof assembly)
2 Linkages and side runners (position of sliding linkages)
3 Sunroof mobile panel
4 Seal

ALP 23 CONTINUED 2	Sunroof chattering: jerky movement when opening/closing sunroof mobile panel

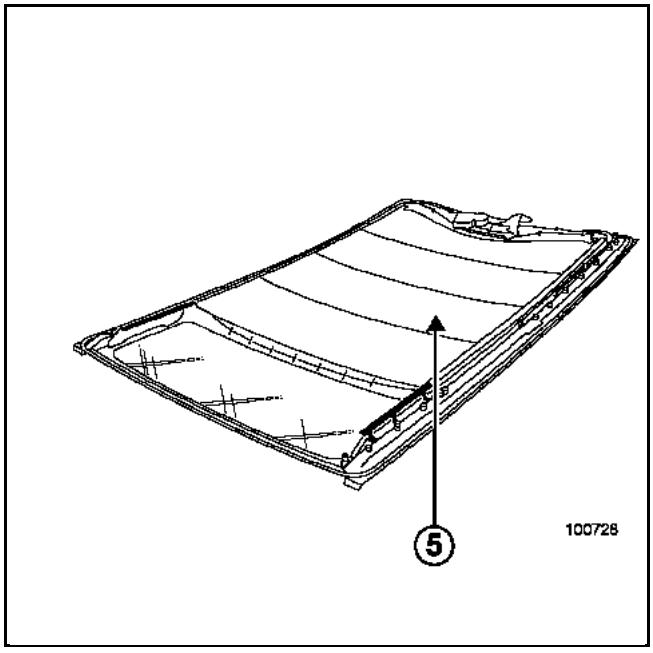

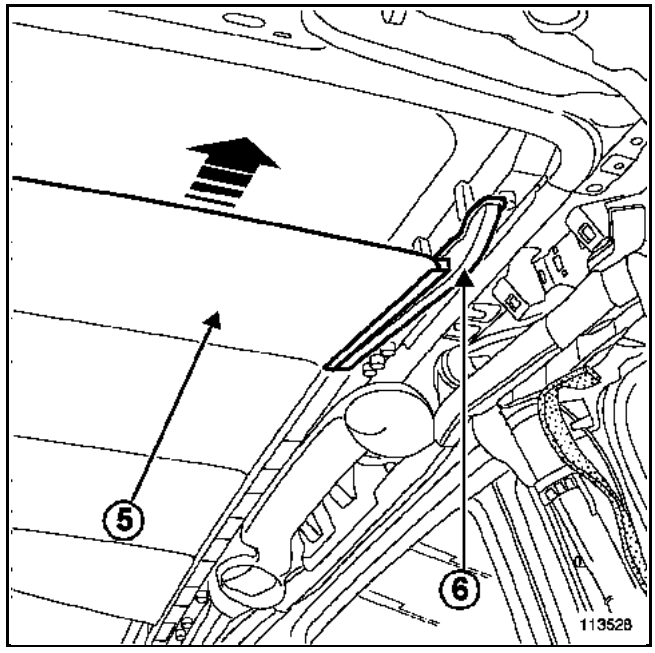

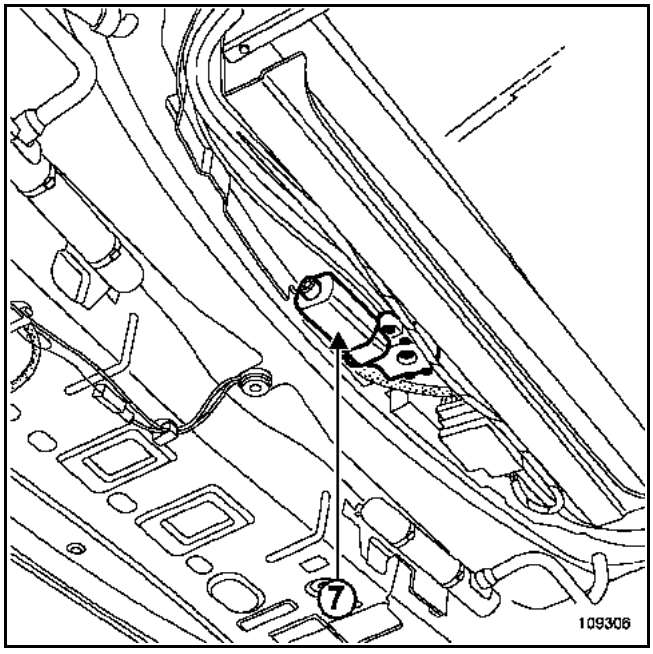

5 Sunroof blind (e.g. Espace IV)
6 Sunblind storage unit
7 Sunroof motor

ALP 24	Sunroof creaking

NOTES	Only consult this customer complaint after a complete check with the diagnostic tool.

Consult the ICM database and check the conformity of the vehicle.
Check the tyre pressures.
Visually inspect the vehicle:
– exterior cleanliness,
– no foreign bodies in the sunroof side runners,
– no parts are broken.

After the operation, check that the operation was successful by performing an operational test or road test.

↓

Check the cleanliness:
– of the seal on the front section of the sunroof*
– of the seal between the mobile panel* and the sunroof operating mechanism*.

→ not correct:
In all cases:
Clean the seals* using a sponge and soapy water (under no circumstances must abrasive soap be used).

↓ correct

Check the condition:
– of the seal on the front section of the sunroof*.
– of the seal between the mobile panel* and the sunroof operating mechanism*.

→ not correct:
If the seal is worn and/or broken, replace:
– the seal* on the front section of the sunroof, and/or
– the seal* between the mobile panel* and the sunroof operating mechanism*.
(see MR for vehicle, **65A OPENING ELEMENT SEALING, Sunroof seal: Removal - Refitting**).

*: see the illustrations in ALP: Sunroof chattering

ALP 25	Grating noise from the sunblind

NOTES	Only consult this customer complaint after a complete check with the diagnostic tool.

Consult the ICM database and check the conformity of the vehicle.
Check the tyre pressures.
Visually inspect the vehicle:
– exterior cleanliness,
– no foreign bodies in the sunroof side runners,
– no parts are broken.

After the operation, check that the operation was successful by performing an operational test or road test.

↓

Remove the headlining (see MR for vehicle, **71A BODY INTERNAL TRIM, Headlining: Removal - Refitting**)

↓ correct

Check the cleanliness of the side runners* and the sunblind storage units*.

→ not correct: Clean then lubricate the side runners* and the sunblind storage units* (see MR for vehicle, **52A NON-SIDE OPENING ELEMENT MECHANISMS, Sunroof blind: Removal - Refitting**).

↓ correct

Check the condition of the sunblind side runners*.

→ not correct: Clean and lubricate the sunblind side runners* (see MR for vehicle, **52A NON-SIDE OPENING ELEMENT MECHANISMS, Sunroof blind: Removal - Refitting**).

*: see the illustrations in ALP: Sunroof chattering

CHART 26	Sunroof rattling

NOTES	Only consult this customer complaint after a complete check with the diagnostic tool.

Consult the ICM database and check the conformity of the vehicle.
Check the tyre pressures.
Visually inspect the vehicle:
– exterior cleanliness,
– no foreign bodies in the sunroof side runners,
– no parts are broken.

After the operation, check that the operation was successful by performing an operational test or road test.

Check the tightness of the **detachable** side runners* at the front of the sunroof*. (e.g. Modus)

not correct → Torque tighten the detachable side runners* (see MR for vehicle concerned, **52A NON-SIDE OPENING ELEMENT MECHANISMS, Sunroof mobile panel: Removal - Refitting**)

correct ↓

Check the cleanliness of the side runners*

not correct → Clean the internal and external side runners* and, depending on the vehicle, only lubricate the internal side runners* or the external side runners* without removing the sunroof mobile panel (see MR for the vehicle, **52A NON-SIDE OPENING ELEMENT MECHANISMS, Sunroof mobile panel: Removal - Refitting**)

correct ↓

Check the linkage* - linkage mounting contact.

not correct → Insulate the contact between the linkage* and the linkage mounting by bonding a piece of felt (part no.: 82 00 281 967) to the front and/or rear linkages.

correct ↓

A

*: see the illustrations in ALP: Sunroof chattering

CHART 26 CONTINUED	Sunroof rattling

A

Check the condition of the mobile panel linkages*.

not correct → Remove the mobile panel* and replace the runners and/or the linkages* of the mobile panel*.
(see MR for vehicle, **52A NON-SIDE OPENING ELEMENT MECHANISMS, Sunroof mobile panel: Removal - Refitting**)

correct ↓

Check the conformity of the sunroof* (damaged runners, operating mechanism, etc.)

not correct → Replace the sunroof*. (see MR for vehicle, **52A NON-SIDE OPENING ELEMENT MECHANISMS, Sunroof operating mechanism: Removal - Refitting**).

correct ↓

Check the geometry of the sunroof* in relation to the bodywork.
(Front, rear and side play)

not correct → Correct the geometry of the sunroof operating mechanism*. (see MR for vehicle, **52A NON-SIDE OPENING ELEMENT MECHANISMS, Sunroof operating mechanism: Removal - Refitting**).
Bolted sunroof operating mechanism*:
Use the centring kit corresponding to the vehicle and tighten the sunroof operating mechanism, observing the tightening order specified in the procedure in sub-section **52A NON-SIDE OPENING ELEMENT MECHANISMS**.
Bonded sunroof operating mechanism*:
Use the centring kit which corresponds to the vehicle.
Remove and reattach the sunroof operating mechanism following the procedure in the sub-section **52A NON-SIDE OPENING ELEMENT MECHANISMS**.

*: see the illustrations in ALP: Sunroof chattering

Introduction:

Before using the diagnostic tool (**Part no. 77 11 421 103**), it is essential to identify that the noise heard by the customer comes from the vehicle (and not from various objects in the vehicle or from the surrounding environment, etc.).

Note: Whenever possible, empty the contents of the vehicle's various storage compartments.

The **ChassisEar** is an electronic, versatile diagnostic tool designed to enable the user, during a road test, to amplify the sounds produced by different areas of the vehicle:

- Suspension
- Rotating components
- Front panel
- Engine
- Engine sub-frame
- Steering column
- Under body
- Rear face

Diagram of the tool:

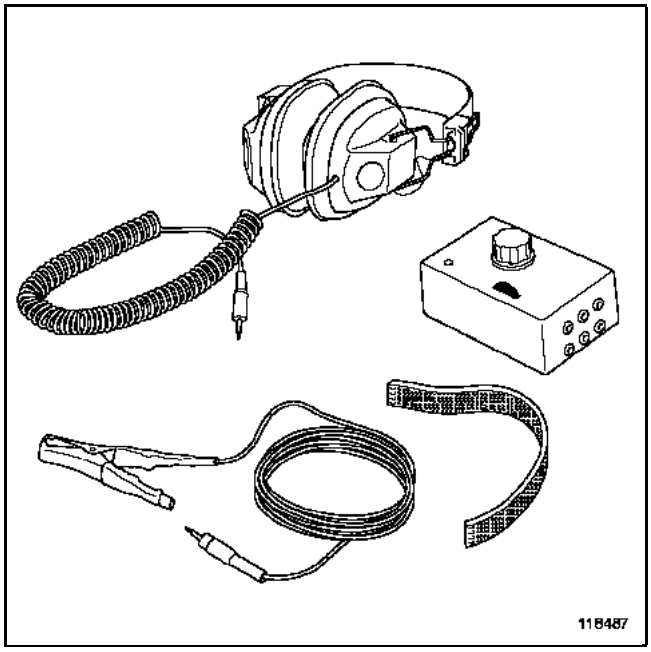

The tool case is composed of the following:

- Control unit (1)
- Clamp - Cable assembly (2)
- Headset (3)
- Velcro strip (4)

1) Fitting the tool:

1.1) Precautions to observe when fitting the tool:

1.1.1) Assembly (wire – clamp):

– Ensure that the clamps are not:
  - In contact with or near to sources of heat (exhaust, etc.)

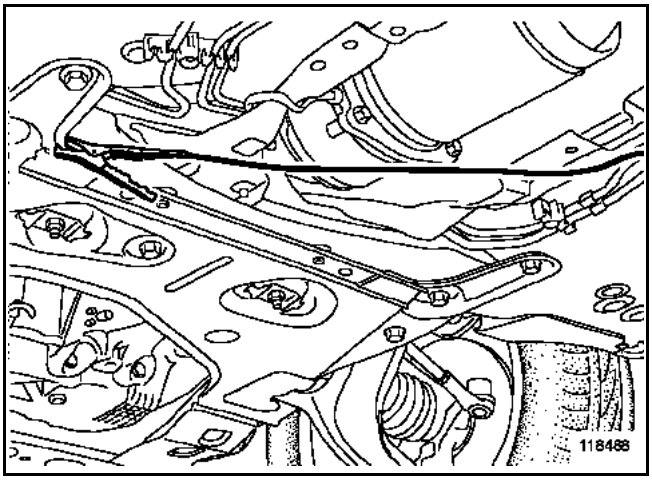

Incorrect fitting

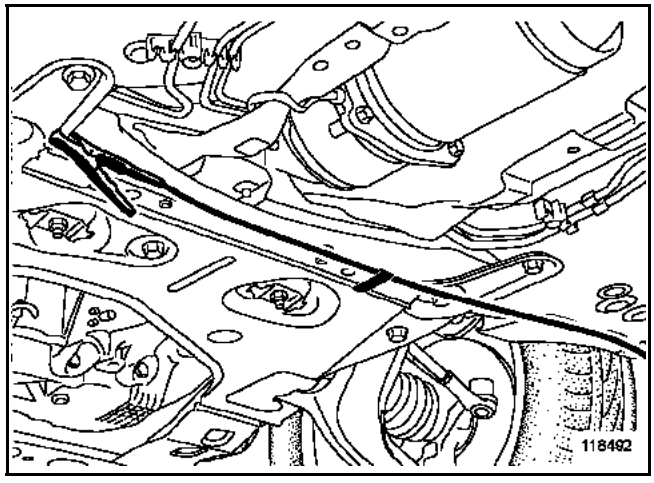

Correct fitting

  - In contact with highly corrosive liquids (brake fluid, etc.).

– Ensure that the clamps are not:
  - In contact with rotating components.

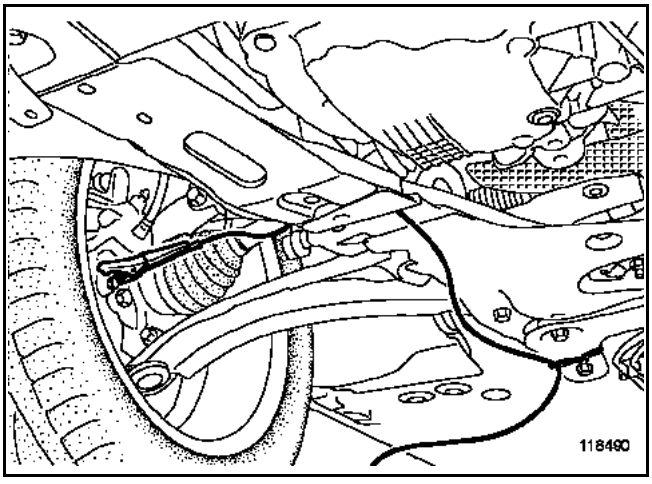

Incorrect fitting

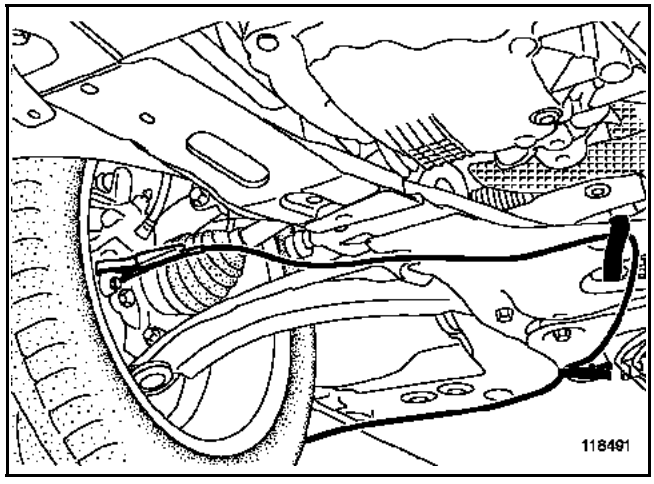

Correct fitting

  - Make provision for parts to move whilst driving (wheels turned to full lock, movement) to prevent the clamp from becoming unclipped and the wire being severed.

- Do not twist the wires.

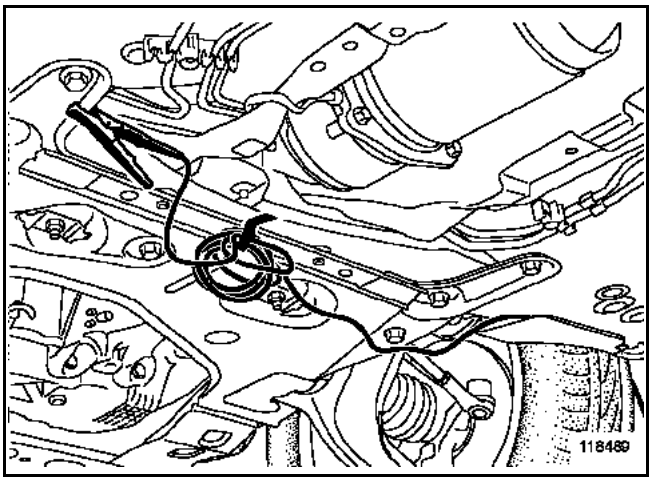

Incorrect fitting

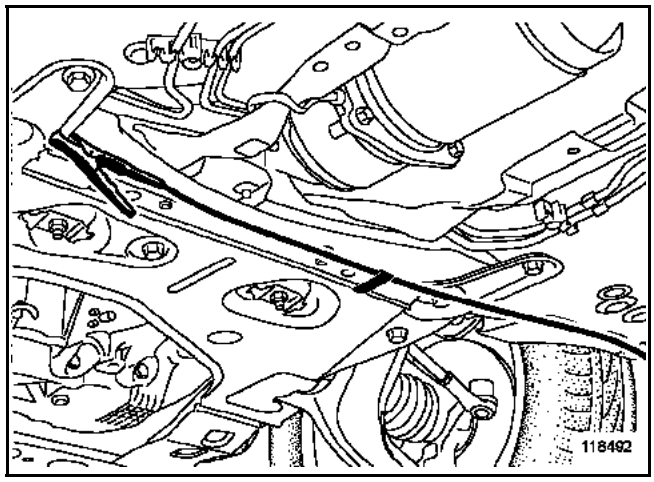

Correct fitting

- Only attach the wires using the velcro strips supplied in the tool case.

1.1.1) Connection (Clamps-Control unit):

The control unit has 6 inputs which correspond to clamps of the following colours:

- **1: Red**
- **2: Green**
- **3: White**
- **4: Pink**
- **5: Blue**
- **6: Orange**

1.1.2) Fitting the tool:

- Place the vehicle on a lift.
- Fit the clamps to the components which may be causing the noise.
- Attach the wires using velcro strips.
- A coloured ring on the wire aids their identification.

- Remember the area or the component studied, according to the position of the clamps.
- Connect the clamps to the control unit.
- Connect the headset.

2) Stages of the test:

WARNING
When driving, **2 people are required**. Someone other than the driver must wear the headpiece.

Do not move the clamps during the driving test.
If the position of the clamps has to be adjusted, the vehicle must be in the workshop.

Perform the vehicle test according to the information collected and shown on the **Fault finding log**, when the customer complaint was registered (conditions under which noise appears).

Confirm the components in question during the test phase by a performing a check in the workshop:
- Special tooling.
- Visual or tactile inspection.

NUMBER PLATE LIGHT: REMOVAL - REFITTING

Note, one or more warnings are present in this procedure

Special tooling required	
Set of trim removal levers.	Car. 1363

WARNING

- To avoid all risk of damage to the systems, apply the safety and cleanliness instructions and operation recommendations before carrying out any repair:
  - Vehicle: Precautions for the repair .

Location and specification (tightening torques, parts always to be replaced, etc.)(see 81A, Rear lighting, Rear signals - lighting assembly: Exploded view) .

REMOVAL

1. REMOVAL OPERATION

- Unclip the number plate light using the toolSet of trim removal levers.(Car. 1363) (see 81A, Rear lighting, Rear signals - lighting assembly: Exploded view) .

- Disconnect the number plate light connector.

-

  Remove the number plate light.

REFITTING

-

  Proceed in the reverse ordre to removal.

XSL version : 3.02 du 22/07/11

BOLTED CONNECTION FOR EARTH

❑ Fitting the electrical earth stud can be done following two possible procedures:

- by resistance welding,
- by fitting of crimped stud.

1. ASSEMBLY BY RESISTANCE WELDING

1- PREPARATION OF THE JOINT

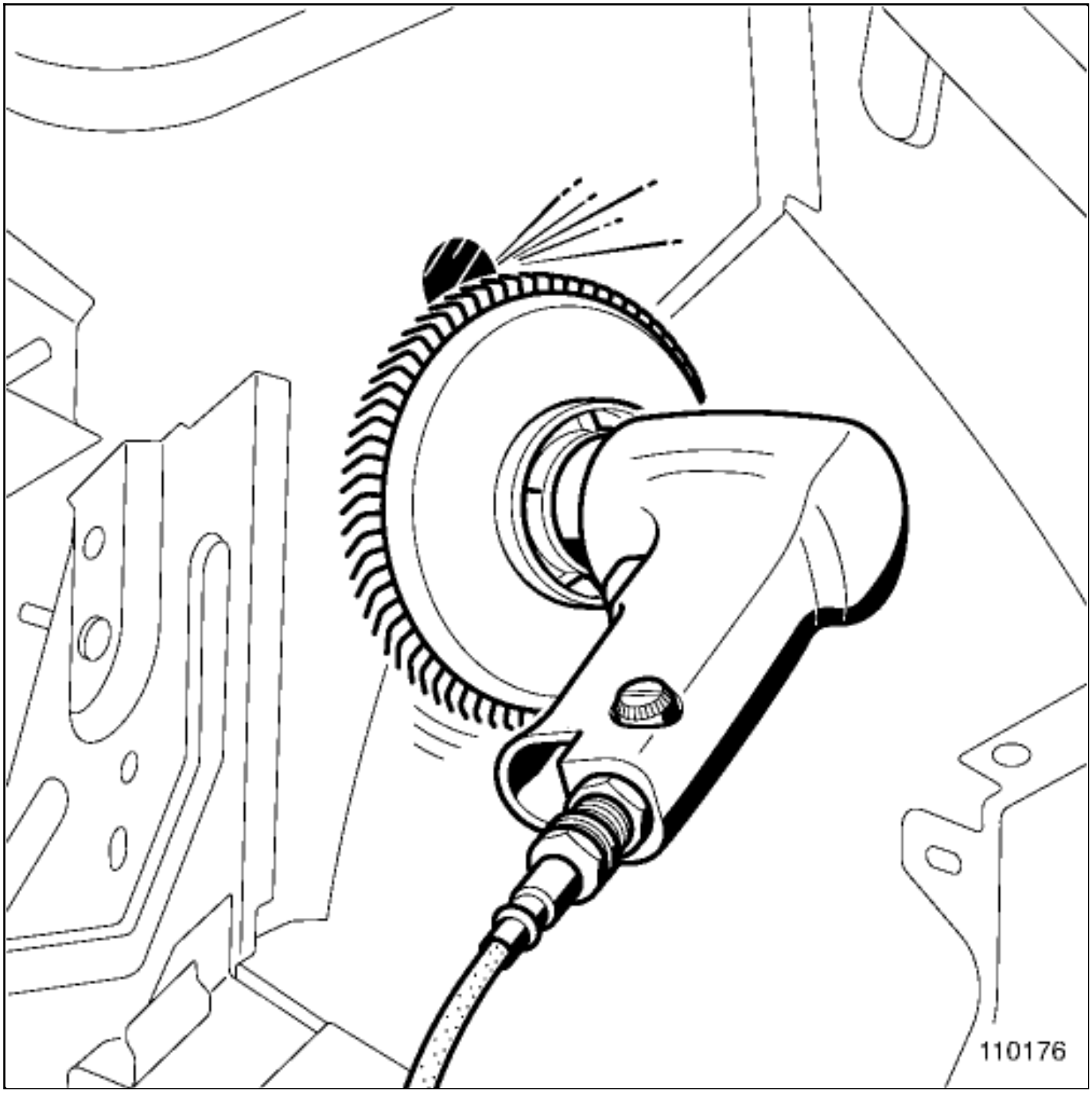

Scour the external face of the part at the location of the earth stud:

(see 05B, Equipment and Tools, Tools for stripping very thick soft mastic: Use) ,

(see 05B, Equipment and Tools, Tools for scraping rigid adhesives and paint: Use) .

2- WELDING

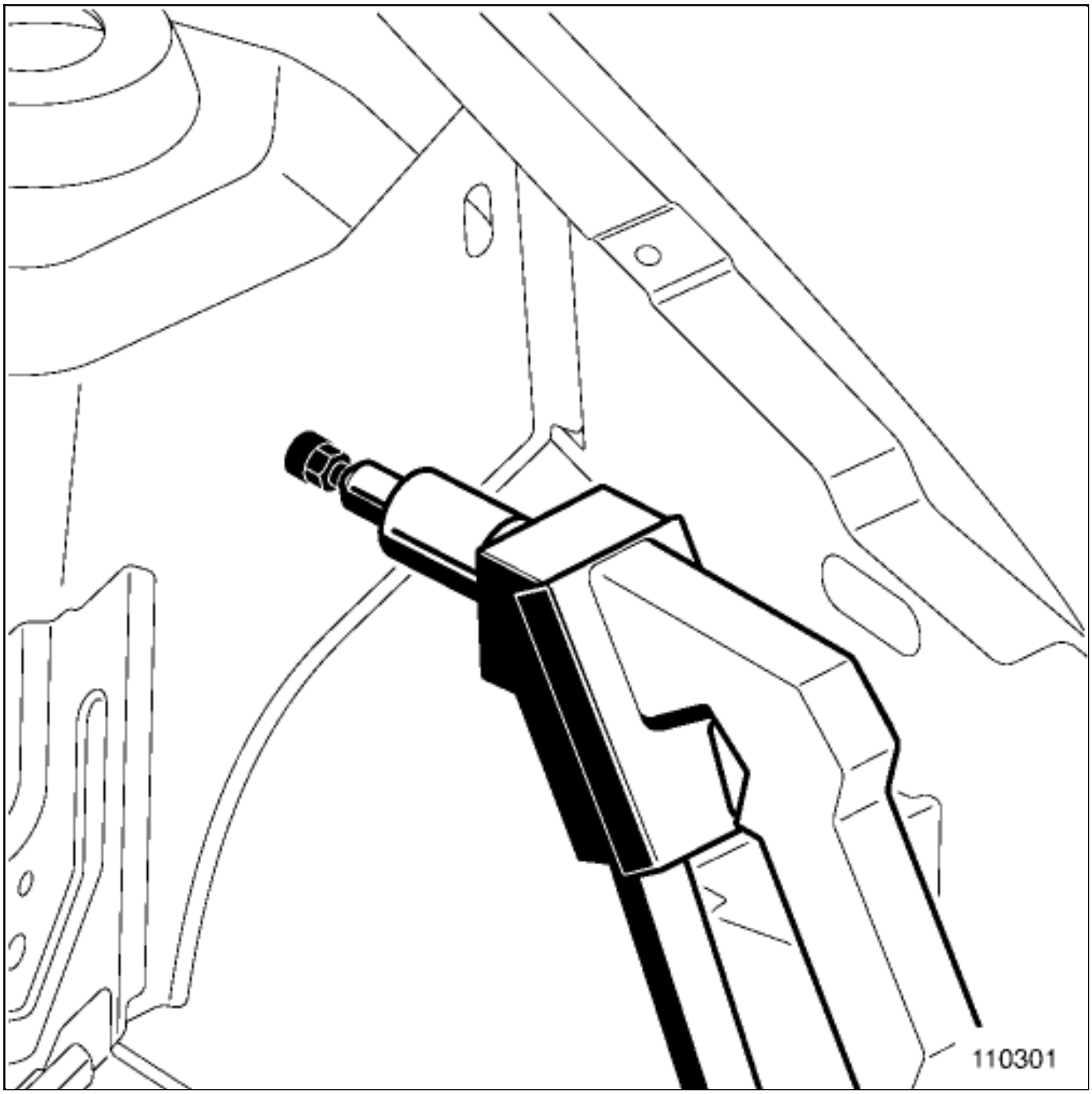

Weld the stud using a resistance welding equipped with the adapted nozzle, using the studs supplied with the welding device.

Manually control the hold of the stud(see 40H, Bolted connections, Bolted connections: Precautions for the repair) .

XSL version : 3.02 du 22/07/11

PARKING BRAKE ASSEMBLY: EXPLODED VIEW

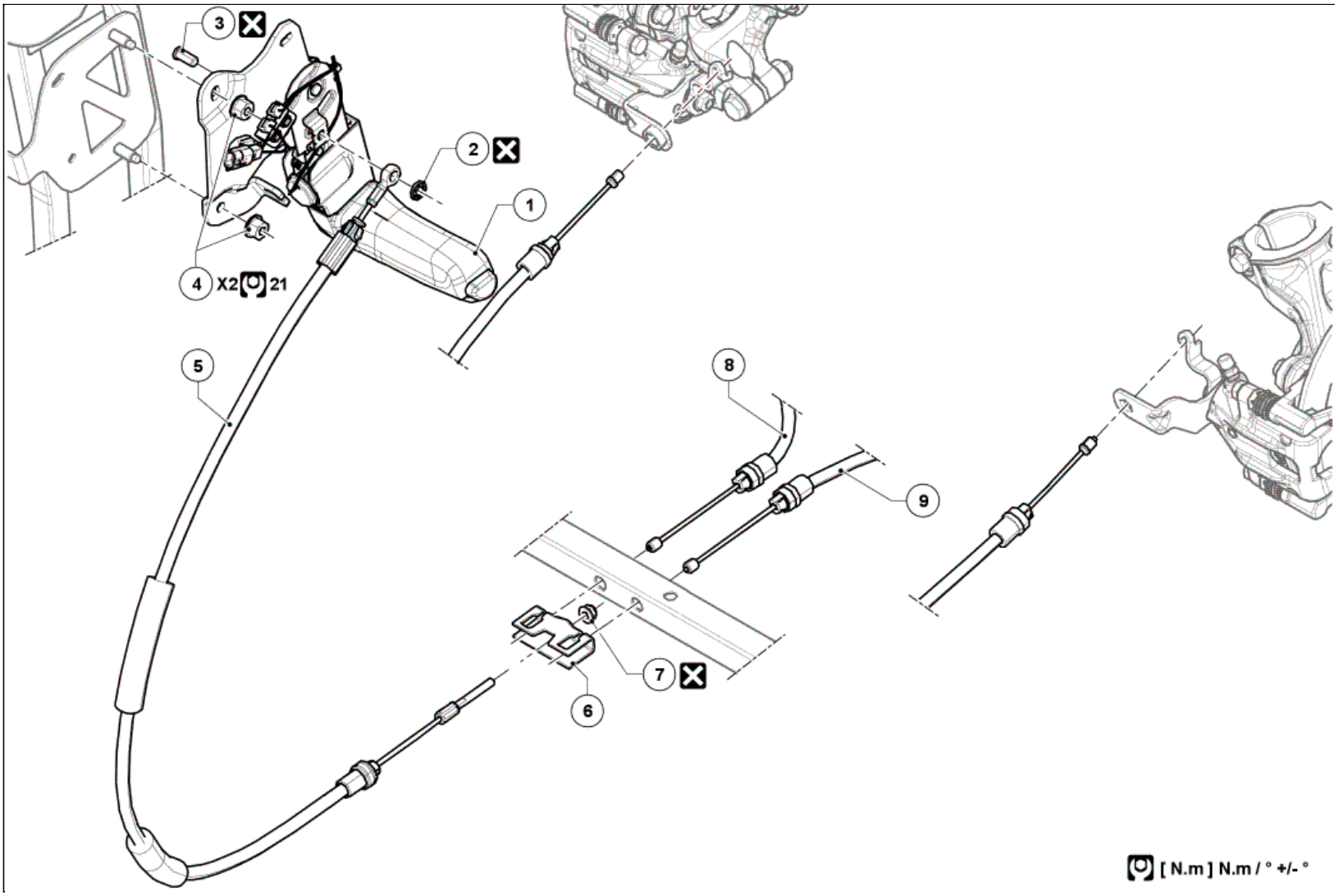

Illustration key: Description .

Marks	Designations	Informations
1	Parking brake lever	Parking brake lever: Removal - Refitting
2	Parking brake lever shaft clamp	
3	Parking brake lever shaft	
4	Parking brake lever nuts	
5	Parking brake primary cable	Parking brake cables: Removal - Refitting
6	Parking brake primary cable compensator	
7	Compensator adjustment nut	
8	Right-hand parking brake secondary cable	Parking brake cables: Removal - Refitting
9	Left-hand parking brake secondary cable	Parking brake cables: Removal - Refitting

PARKING BRAKE CABLES: REMOVAL - REFITTING

Note, one or more warnings are present in this procedure

WARNING

To avoid all risk of damage to the systems, apply the safety and cleanliness instructions and operation recommendations before carrying out any repair:

- Brake circuit: Precautions for the repair ,
- Vehicle: Precautions for the repair .

CAUTION

To avoid damaging the parking brake cable protectors and causing premature wear of the system, do not handle the cables with a tool.

Location and specifications (tightening torques, parts always to be replaced, etc.)Parking brake assembly: Exploded view .

REMOVAL

1. REMOVAL PREPARATION OPERATION

WARNING

DANGER : Risk of serious injuries due to the short-circuiting or the untimely triggering of an electrical system (pyrotechnical parts, windscreen wiper motor, electric fan, etc.) following possible loopback of the 12-volt supply circuit by the voltage transformer.

Please adhere to the instructions regarding cut-off of the 12-volt supply circuit.

If the procedure fails, do not continue with your task and ask an employee who is qualified and authorized to work on a high-voltage onboard network to perform a diagnostic Vehicle: Precautions for the repair .

Lockout the 12V supply circuit12 V supply circuit : Lockout - Removal of lockout .

1- PARKING BRAKE PRIMARY CABLE

Position the vehicle on a two post liftVehicle: Towing and lifting .

Remove the door mirrorsDoor mirror: Removal - Refitting .

Remove the front bumper upper stripExterior body front trim assembly: Exploded view .

Remove the A-pillar trimsExterior body side trim assembly: Exploded view .

Remove Exterior body front trim assembly: Exploded view :

- the front bumper lower trim,
- the front bumper trim.

Remove:

- the front floor carpet,
- the front floor Floor trim assembly: Exploded view .

Remove Dashboard assembly: Exploded view :

- the fuses flap,
- the left-hand glovebox.

2- PARKING BRAKE SECONDARY CABLES

Position the vehicle on a two post lift Vehicle: Towing and lifting .

Remove the door mirrors Door mirror: Removal - Refitting .

Remove the front bumper upper strip Exterior body front trim assembly: Exploded view .

Remove Exterior body side trim assembly: Exploded view :

- the A-pillar trims,
- the B-pillar trims,
- the body side trims,
- the sill panel extensions.

Remove:

- the front seat Front seat assembly: Exploded view ,
- the rear seat,
- the rear headlining Interior body side trim assembly: Exploded view ,
- the rear side panel trims Interior body side trim assembly: Exploded view ,
- the centre floor Floor trim assembly: Exploded view ,
- the front floor carpet,
- the front floor Floor trim assembly: Exploded view .

2. REMOVAL OPERATION

1- PARKING BRAKE PRIMARY CABLE

- Remove the compensator adjustment nut Parking brake assembly: Exploded view .
- Tighten the parking brake until it stops.
- Remove Parking brake assembly: Exploded view :
  - the parking brake lever shaft clamp,
  - the parking brake lever shaft.
- Unclip Parking brake assembly: Exploded view :
  - the parking brake primary cable from the parking brake lever,
  - the parking brake primary cable from the parking brake compensator.

❑

Remove the parking brake primary cable Parking brake assembly: Exploded view .

2- PARKING BRAKE SECONDARY CABLES

❑

Loosen the compensator adjustment nut Parking brake assembly: Exploded view .

❑

Unhook Parking brake assembly: Exploded view :

- the parking brake secondary cables from the parking brake compensator,
- the parking brake secondary cables from the rear brake callipers.

❑

Remove the parking brake secondary cables Parking brake assembly: Exploded view .

REFITTING

1. REFITTING OPERATION

❑

Proceed in the reverse order to removal.

2. FINAL OPERATION

❑

Adjust the parking brake lever (see 37A, Mechanical component controls, Parking brake lever: Adjustment) .

❑

Remove the lockout of the 12V supply circuit 12 V supply circuit : Lockout - Removal of lockout .

XSL version : 3.02 du 22/07/11

PARKING BRAKE CABLES: REMOVAL - REFITTING

Note, one or more warnings are present in this procedure

WARNING

- To avoid all risk of damage to the systems, apply the safety and cleanliness instructions and operation recommendations before carrying out any repair:
  - Brake circuit: Precautions for the repair ,
  - Vehicle: Precautions for the repair .

CAUTION

To avoid damaging the parking brake cable protectors and causing premature wear of the system, do not handle the cables with a tool.

Location and specifications (tightening torques, parts always to be replaced, etc.)Parking brake assembly: Exploded view .

REMOVAL

1. REMOVAL PREPARATION OPERATION

WARNING

DANGER : Risk of serious injuries due to the short-circuiting or the untimely triggering of an electrical system (pyrotechnical parts, windscreen wiper motor, electric fan, etc.) following possible loopback of the 12-volt supply circuit by the voltage transformer.

Please adhere to the instructions regarding cut-off of the 12-volt supply circuit.

If the procedure fails, do not continue with your task and ask an employee who is qualified and authorized to work on a high-voltage onboard network to perform a diagnostic Vehicle: Precautions for the repair .

- Lockout the 12V supply circuit12 V supply circuit : Lockout - Removal of lockout .

1- PARKING BRAKE PRIMARY CABLE

- Position the vehicle on a two post liftVehicle: Towing and lifting .

- Remove the front bumper upper stripExterior body front trim assembly: Exploded view .

- Remove the A-pillar trimsExterior body side trim assembly: Exploded view .

- Remove Exterior body front trim assembly: Exploded view :
  - the front bumper lower trim,
  - the front bumper trim.

- Remove:
  - the front floor carpet,
  - the front floorFloor trim assembly: Exploded view .

- Remove Dashboard assembly: Exploded view :
  - the fuses flap,
  - the left-hand glovebox.

2- PARKING BRAKE SECONDARY CABLES

- Position the vehicle on a two post liftVehicle: Towing and lifting .

- Remove the front bumper upper stripExterior body front trim assembly: Exploded view .

- Remove Exterior body side trim assembly: Exploded view :

- the A-pillar trims,
- the B-pillar trims,
- the body side trims,
- the sill panel extensions.

- Remove:
  - the front seat Front seat assembly: Exploded view ,
  - the rear seat,
  - the rear headlining Interior body side trim assembly: Exploded view ,
  - the rear side panel trims Interior body side trim assembly: Exploded view ,
  - the centre floor Floor trim assembly: Exploded view ,
  - the front floor carpet,
  - the front floor Floor trim assembly: Exploded view .

2. REMOVAL OPERATION

1- PARKING BRAKE PRIMARY CABLE

- Remove the compensator adjustment nut Parking brake assembly: Exploded view .
- Tighten the parking brake until it stops.
- Remove Parking brake assembly: Exploded view :

- the parking brake lever shaft clamp,
- the parking brake lever shaft.

- Unclip Parking brake assembly: Exploded view :
  - the parking brake primary cable from the parking brake lever,
  - the parking brake primary cable from the parking brake compensator.

- Remove the parking brake primary cableParking brake assembly: Exploded view .

2- PARKING BRAKE SECONDARY CABLES

- Loosen the compensator adjustment nutParking brake assembly: Exploded view .

- Unhook Parking brake assembly: Exploded view :
  - the parking brake secondary cables from the parking brake compensator,
  - the parking brake secondary cables from the rear brake callipers.

- Remove the parking brake secondary cablesParking brake assembly: Exploded view .

REFITTING

1. REFITTING OPERATION

- Proceed in the reverse order to removal.

2. FINAL OPERATION

❑

Adjust the parking brake lever(see 37A, Mechanical component controls, Parking brake lever: Adjustment) .

❑

Remove the lockout of the 12V supply circuit12 V supply circuit : Lockout - Removal of lockout .

Repair-13x03x11x03-01x37-1-34-1.xml

XSL version : 3.02 du 22/07/11

PARKINGBRAKELEVER:ADJUSTMENT

Note:

- A poorly adjusted parking brake:
  - prevents correct operation of the automatic compensation system for the brake shoes,
  - causes premature wear of brake shoes.

ADJUSTMENT

1. ADJUSTMENT PREPARATION OPERATION

- Position the vehicle on a two-post lift Vehicle: Towing and lifting .
- Apply the parking brake five times to condition the cables for normal use.
- Put the parking brake lever into the released position.
- Check that the rear wheels turn freely. If they do not, check the following components and if necessary repair:
  - the parking brake cables,
  - the calliper piston,
  - the automatic compensation system,
  - calliper.
- Remove the rear wheels Wheel: Removal - Refitting .
- Remove Floor trim assembly: Exploded view :
  - the front floor carpet,

the front floor.

2. OPERATION FOR ADJUSTMENT OF PART CONCERNED

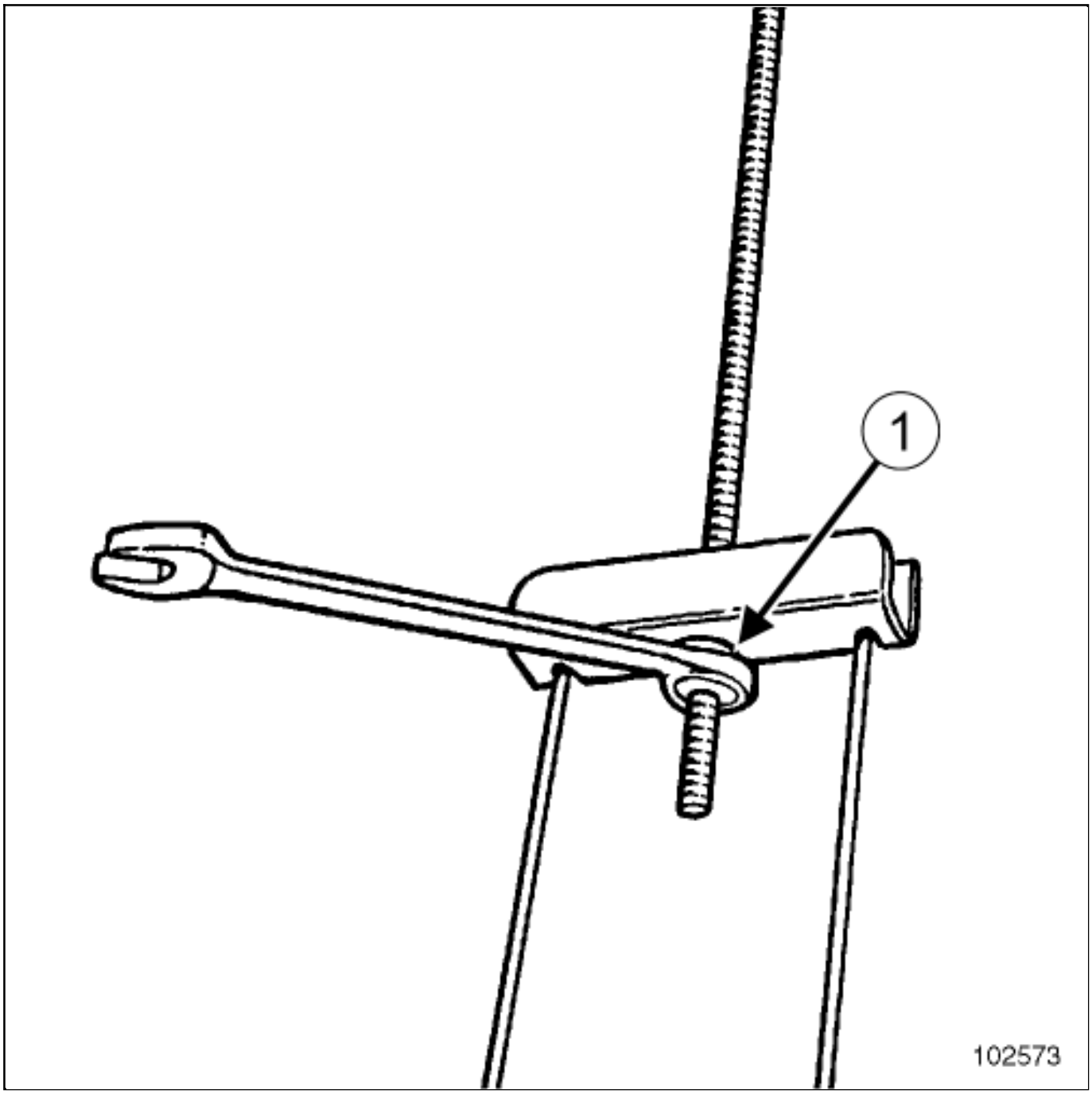

- Loosen the nut(1) to release the cables.

- Position the parking brake lever at the 2nd notch.
- Move the adjustment nut until the disc or drum can no longer be turned by hand.
- Pull the brake lever several times.
- Put the parking brake lever into the released position.
- The disc or the drum must be able to turn freely. If not, move the nut gradually until the disc or drum can turn freely.

3. FINAL OPERATION

- Refit Floor trim assembly: Exploded view :
  - the front floor,
  - the front floor carpet.
- Refit the rear wheelsWheel: Removal - Refitting .

Repair-13x03x11x01-01x67-1-11-1.xml

XSL version : 3.02 du 22/07/11

PARKING BRAKE LEVER: REMOVAL - REFITTING

Note, one or more warnings are present in this procedure

WARNING

To avoid all risk of damage to the systems, apply the safety and cleanliness instructions and operation recommendations before carrying out any repair:

Vehicle: Precautions for the repair .

Location and specifications (tightening torques, parts always to be replaced, etc.):Parking brake assembly: Exploded view .

REMOVAL

1. REMOVAL PREPARATION OPERATION

Remove Floor trim assembly: Exploded view :

- the front floor carpet,
- the front floor.

Loosen the brake primary cable compensator adjustement nutParking brake assembly: Exploded view .

Remove Dashboard assembly: Exploded view :

- the fuses flap,
- the left-hand glovebox.

2. REMOVAL OPERATION

- Tighten the parking brake until it stops.

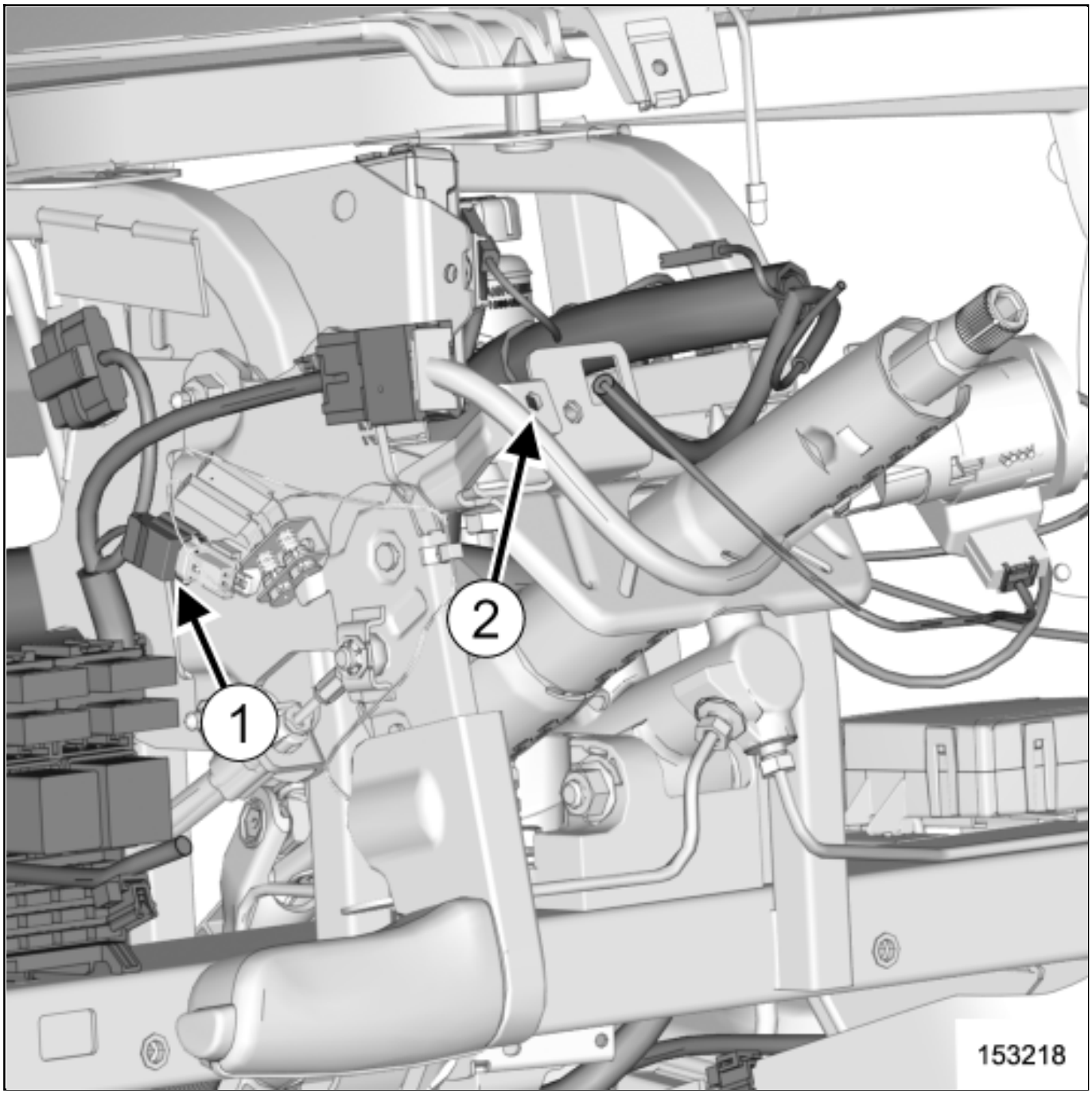

- Disconnect the parking lever sensor(1) .

- Unclip the rotary switch wiring(2) .

- Remove Parking brake assembly: Exploded view :
  - the parking brake lever shaft clamp,
  - the parking brake lever shaft,
  - the parking brake lever nuts.

- Unhook the parking brake primary cable from the parking brake lever Parking brake assembly: Exploded view .

- Remove the parking brake lever Parking brake assembly: Exploded view .

REFITTING

1. REFITTING OPERATION

- Proceed in the reverse order to removal.

2. FINAL OPERATION

- Adjust the parking brake lever (see 37A, Mechanical component controls, Parking brake lever: Adjustment) .

PEDAL ASSEMBLY: EXPLODED VIEW

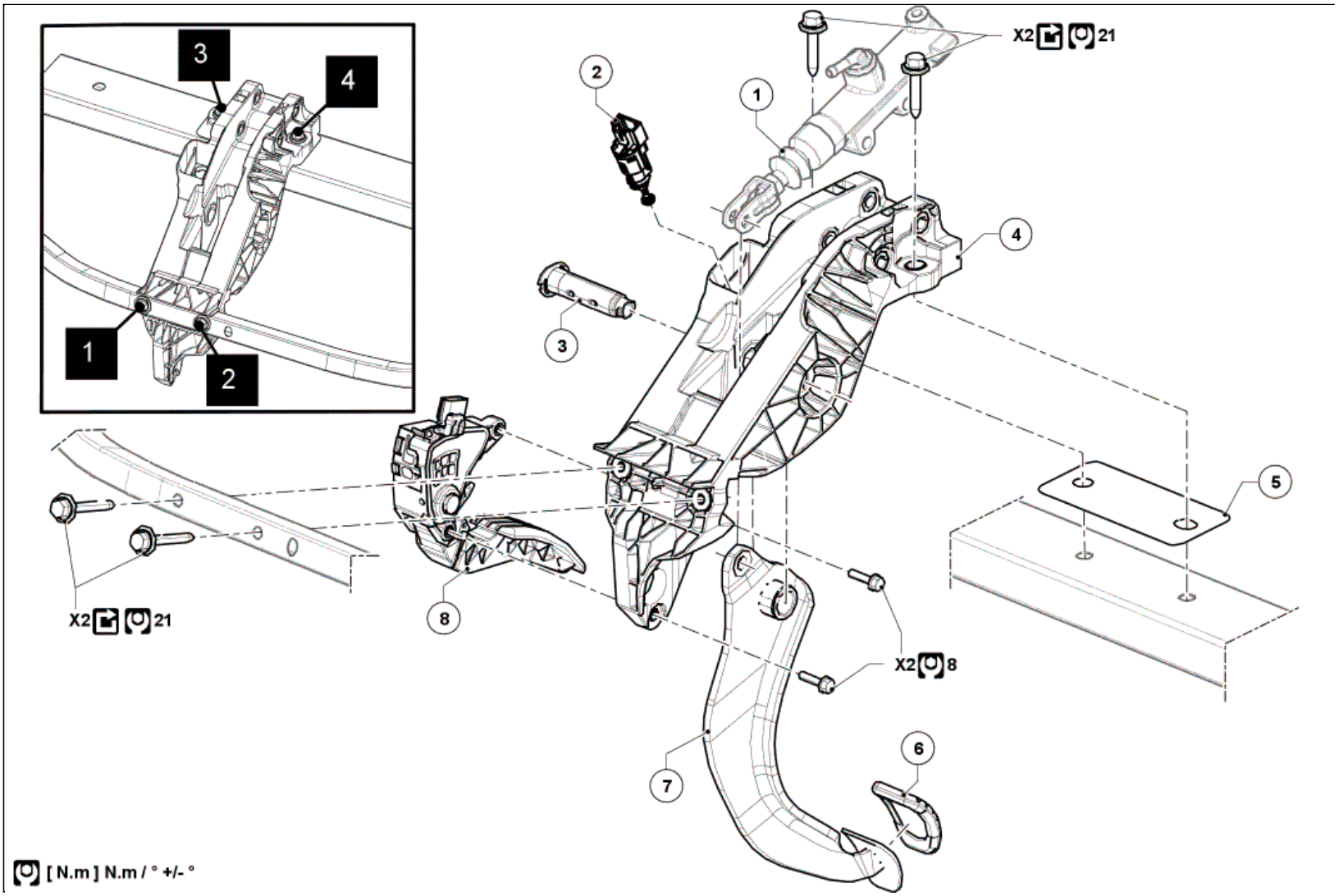

Illustration key: Description .

For fastenings with no specified tightening torque values, refer to the Table of Standard TorquesTightening torques: General information .

Marks	Designations	Informations
1	Master cylinder	(see 37A, Mechanical component controls, Braking control assembly: Exploded view)
2	Brake pedal switch	(see 37A, Mechanical component controls, Pedal switches: Adjustment)
3	Brake pedal shaft	
4	Pedal yoke	(see 37A, Mechanical component controls, Pedal yoke: Removal - Refitting)
5	Connecting plate	
6	Brake pedal rubber pad	
7	Brake pedal	
8	Accelerator pedal	

PEDAL ASSEMBLY MECHANISM: PRECAUTIONS FOR THE REPAIR

Note, one or more warnings are present in this procedure

1. BRAKE PEDAL

WARNING

To avoid breaking the connection between the brake servo pushrod and the brake pedal, check that the safety clevis pin is locked onto the brake servo pushrod by tilting it from the top downwards.

2. PEDAL SWITCHES

CAUTION

Incorrect adjustment of the pedal switches may cause premature wear of the brakes or clutch, or a malfunction of the injection system.

VIMERCATI AND BITRON SWITCHES (GENERATION 1)

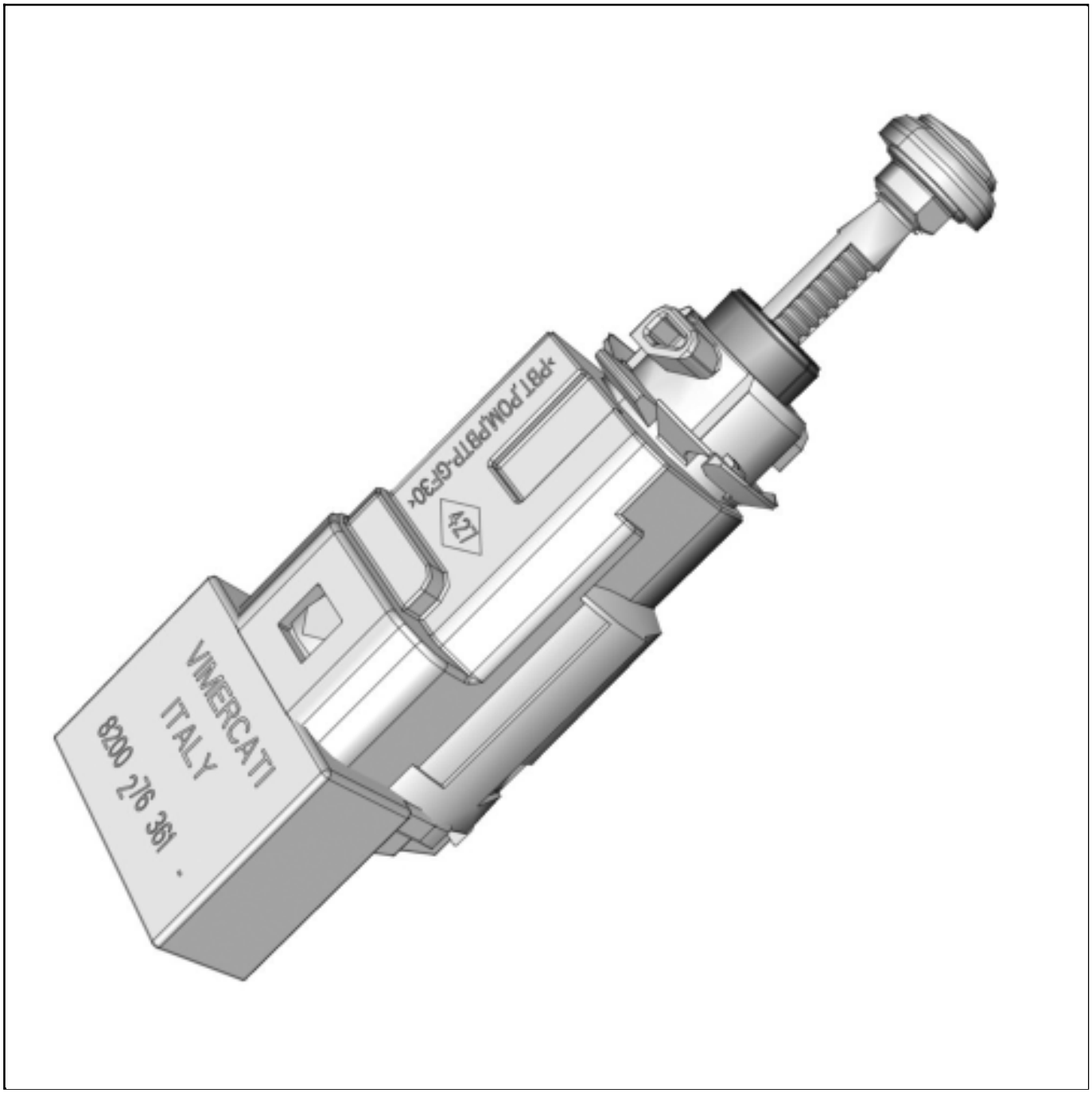

CAUTION

To ensure the correct operation of the switch, the notched rod must not be separated from the switch casing. Whenever the notched rod is completely removed, the switch must be replaced.

CAUTION

To avoid a possible loss of adjustment, replace the switch after 3 consecutive adjustments of the notched rod.

BITRON SWITCHES (GENERATION 2)

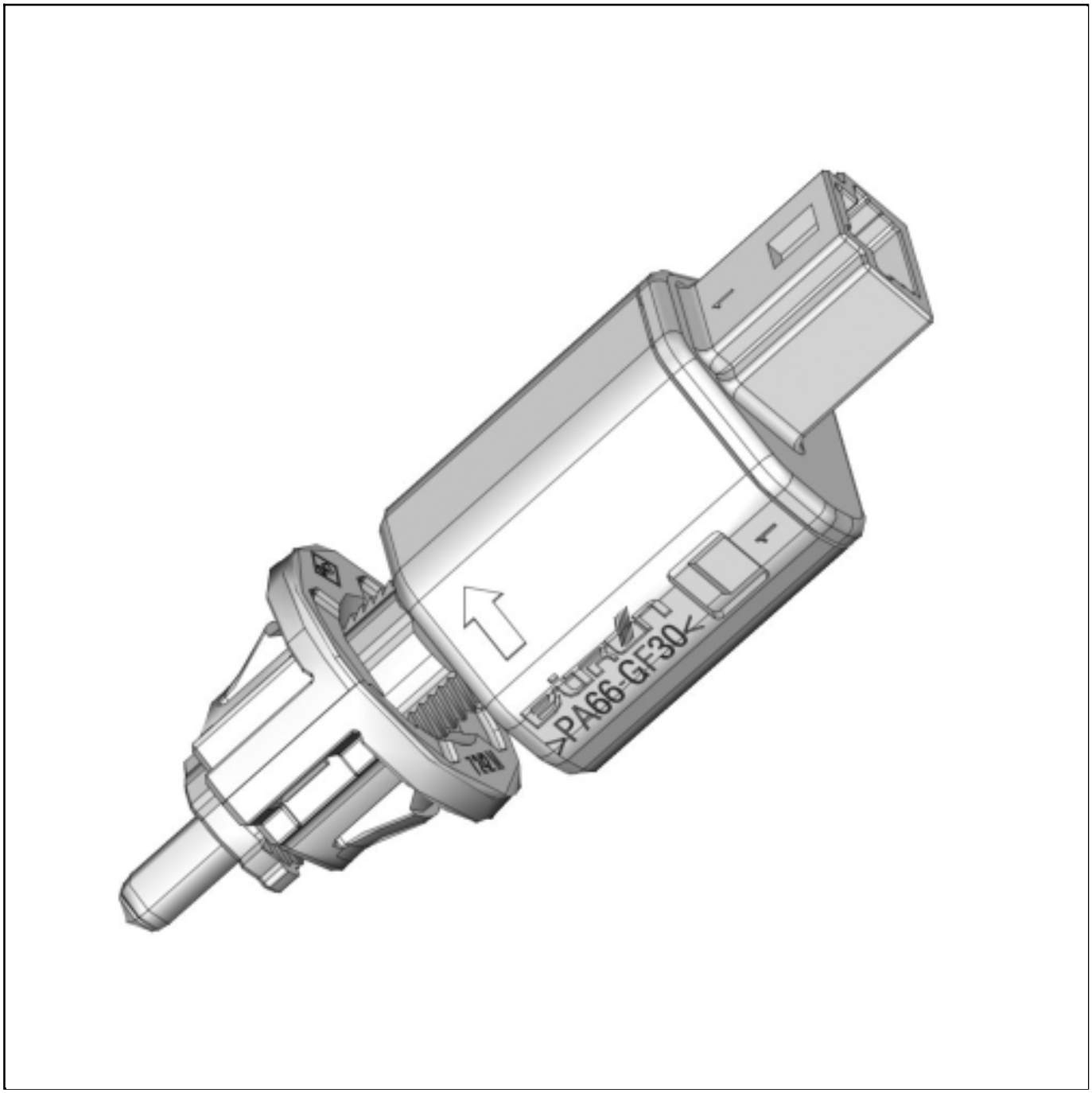

CAUTION

To avoid any malfunction (cruise control - speed limiter, starting function, braking function), the pedal switches must be replaced whenever they are removed.

METHODE ELECTRONICS (GENERATION 4)

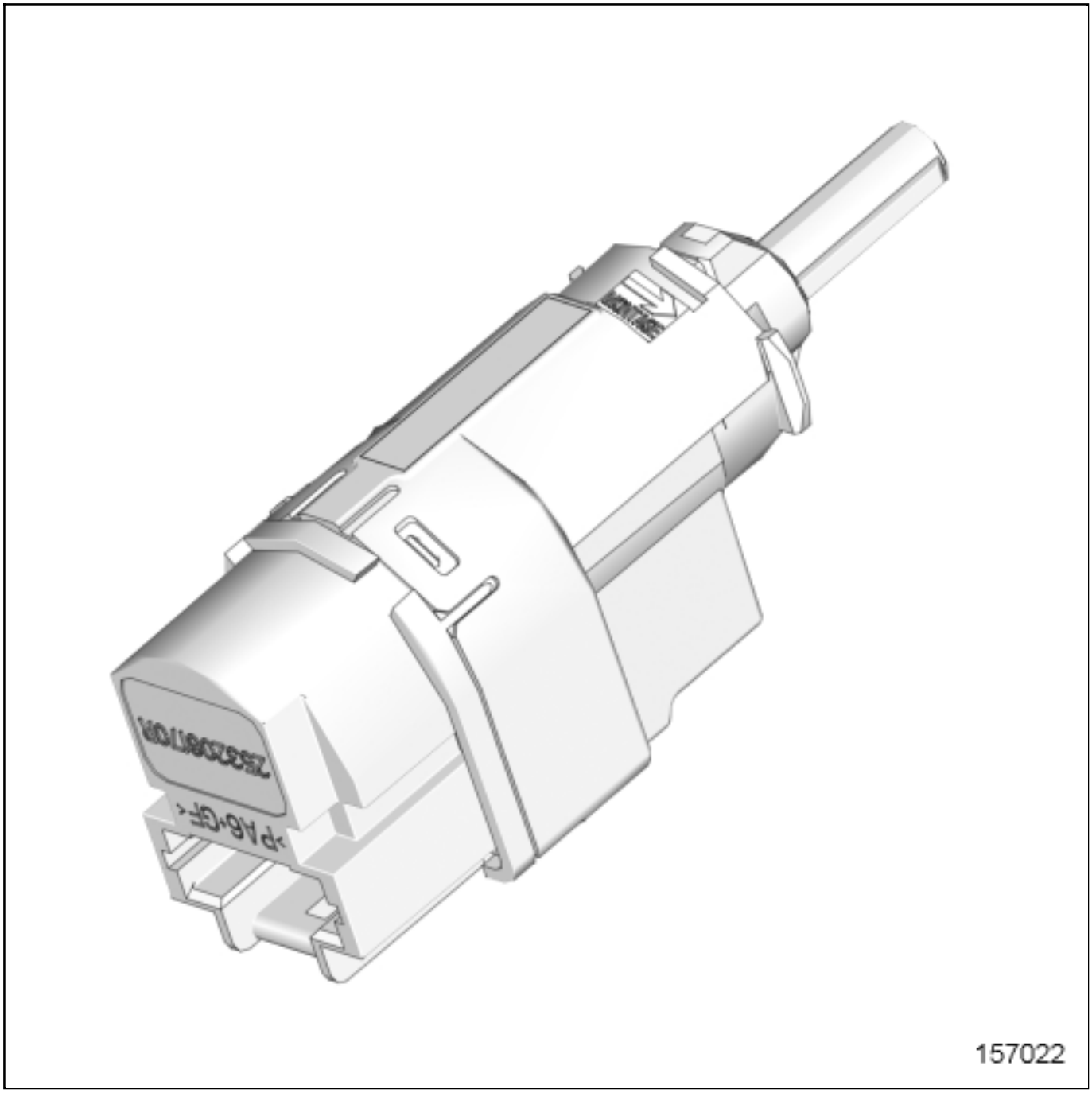

CAUTION

To ensure the correct operation of the switch, the notched rod must not be separated from the switch casing. Whenever the notched rod is completely removed, the switch must be replaced.

Note:

Do not press or move the pedal during installation in order to avoid incorrect adjustment of the switch.

Note:

Do not press or move the pedal during disassembly in order to avoid damaging the switch.

Note:

Do not remove or fit the brake pedal switch if the brake pedal is not connected to the brake servo pushrod.

Note:

Do not remove or fit the clutch pedal switch if the clutch pedal is not connected to the clutch master cylinder.

PEDAL YOKE: REMOVAL - REFITTING

Note, one or more warnings are present in this procedure

Equipment required
Diagnostic tool

WARNING

To avoid all risk of damage to the systems, apply the safety and cleanliness instructions and operation recommendations before carrying out any repair:

(see 37A, Mechanical component controls, Pedal assembly mechanism: Precautions for the repair) ,

Vehicle: Precautions for the repair .

CAUTION

Prepare for the flow of fluid, and protect the surrounding components.

Location and specifications (tightening torques, parts always to be replaced, etc.)(see 37A, Mechanical component controls, Pedal assembly: Exploded view) .

REMOVAL

1. REMOVAL PREPARATION OPERATION

Position the vehicle on a two-post lifVehicle: Towing and lifting .

WARNING

To avoid any risk of triggering when working on or near a pyrotechnic component (airbags or pretensioners), lock the airbag computer using the diagnostic tool.

When this function is activated, all the trigger lines are inhibited and the airbag warning light on the instrument panel lights up continuously (ignition on).

❑

Lock the airbag computer using the Diagnostic tool(see Fault finding - Replacement of components) (88C, Airbags and pretensioners).

❑

Position the handbrake on the third notching.

WARNING

DANGER : Risk of serious injuries due to the short-circuiting or the untimely triggering of an electrical system (pyrotechnical parts, windscreen wiper motor, electric fan, etc.) following possible loopback of the 12-volt supply circuit by the voltage transformer.

Please adhere to the instructions regarding cut-off of the 12-volt supply circuit.

If the procedure fails, do not continue with your task and ask an employee who is qualified and authorized to work on a high-voltage onboard network to perform a diagnostic Vehicle: Precautions for the repair .

❑

Lockout the 12V supply circuit12 V supply circuit : Lockout - Removal of lockout .

❑

Remove the front bumper upper stripExterior body front trim assembly: Exploded view .

❑

Remove the A-pillar trimsExterior body side trim assembly: Exploded view .

❑

Remove **Exterior body front trim assembly: Exploded view** :

- the front bumper lower trim,
- the front bumper trim.

Remove **Exterior body side trim assembly: Exploded view** :

- the B-pillar trims,
- the roof front section trims,
- the windscreen side windows.

Remove:

- the front end panel**Exterior body front trim assembly: Exploded view** ,
- the dashboard**Dashboard assembly: Exploded view** .

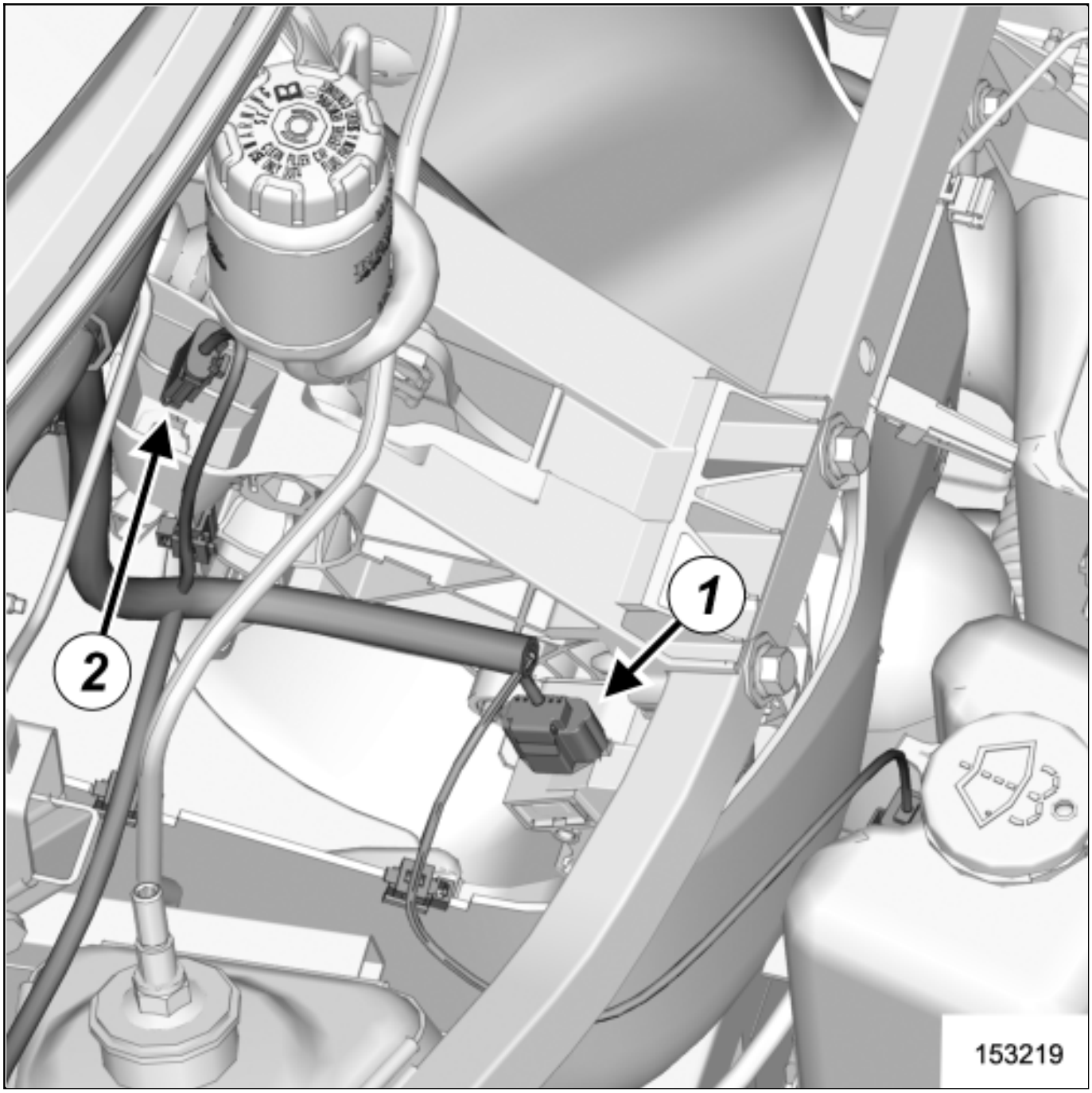

Disconnect:

- the accelerator pedal connector(1) ,
- the brake pedal sensor connector(2) .

Remove the rigid brake pipe unions on the master cylinder(see 37A, Mechanical component controls, Braking control assembly: Exploded view) .

CAUTION

Prepare for the flow of fluid, and protect the surrounding components.

- Fit blanking plugs.

2. REMOVAL OPERATION

- Remove (see 37A, Mechanical component controls, Pedal assembly: Exploded view) :
  - the pedal mounting plate lower screws,
  - the pedal mounting plate upper screws,
  - the pedal mounting plate.

1- IN THE EVENT OF REPLACEMENT

- Remove:
  - the accelerator pedal(see 37A, Mechanical component controls, Pedal assembly: Exploded view) ,
  - the brake pedal(see 37A, Mechanical component controls, Pedal assembly: Exploded view) ,
  - the master cylinder(see 37A, Mechanical component controls, Braking control assembly: Exploded view) .

REFITTING

1. REFITTING OPERATION

-

Proceed in the reverse order to removal.

2. FINAL OPERATION

- Fill up and bleed the brake circuit**Braking circuit: Bleed** .

- Remove the lockout of the 12V supply circuit**12 V supply circuit : Lockout - Removal of lockout** .

- Unlock the airbag computer using the Diagnostic tool(see Fault finding - Replacement of components) (88C, Airbags and pretensioners).

Repair-30x03x07-01x37-1-5-1.xml

XSL version : 3.02 du 22/07/11

PERSONAL PROTECTION EQUIPMENT FOR ELECTRIC VEHICLE : DESCRIPTION

Any operation on the components of an electric vehicle under voltage requires the use of personal protective equipment and vehicle safety equipment.

Personal protective equipment must be kept in proper condition according to the applicable instructions from the time it is first used.

The operator must visually check the condition of safety equipment before each use.

The operator must receive proper training, including training on how to put on safety equipment.

- For any OPERATION INVOLVING ELECTRICITY presenting an electrical risk, the operator must at least:
  - never wear any metal objects or jewellery of any type that could come into contact with exposed parts,
  - wear a flame-retardant coverall that has no metal parts.

- For all operations on electric vehicles, it is compulsory to use:
  - Work clothing made primarily of cotton fibres,
  - Safety shoes,
  - Reinforced helmet,
  - Face shield,
  - Insulating gloves,
  - Lockout padlock for the traction battery,
  - Lockout tool for the traction battery,
  - Voltage absence detector,
  - Barriers, plastic chain, barrier tape,
  - Lockout-Removal of lockout Sheet,
  - Lockout signs.

The employer must provide employees with Personal Protective Equipment.

For individuals performing operations on behalf of service providers and external suppliers, the personal protective equipment must be supplied by their respective employers.

The personal protective equipment required for working on electric vehicles are as follows.

1. OVERALLS

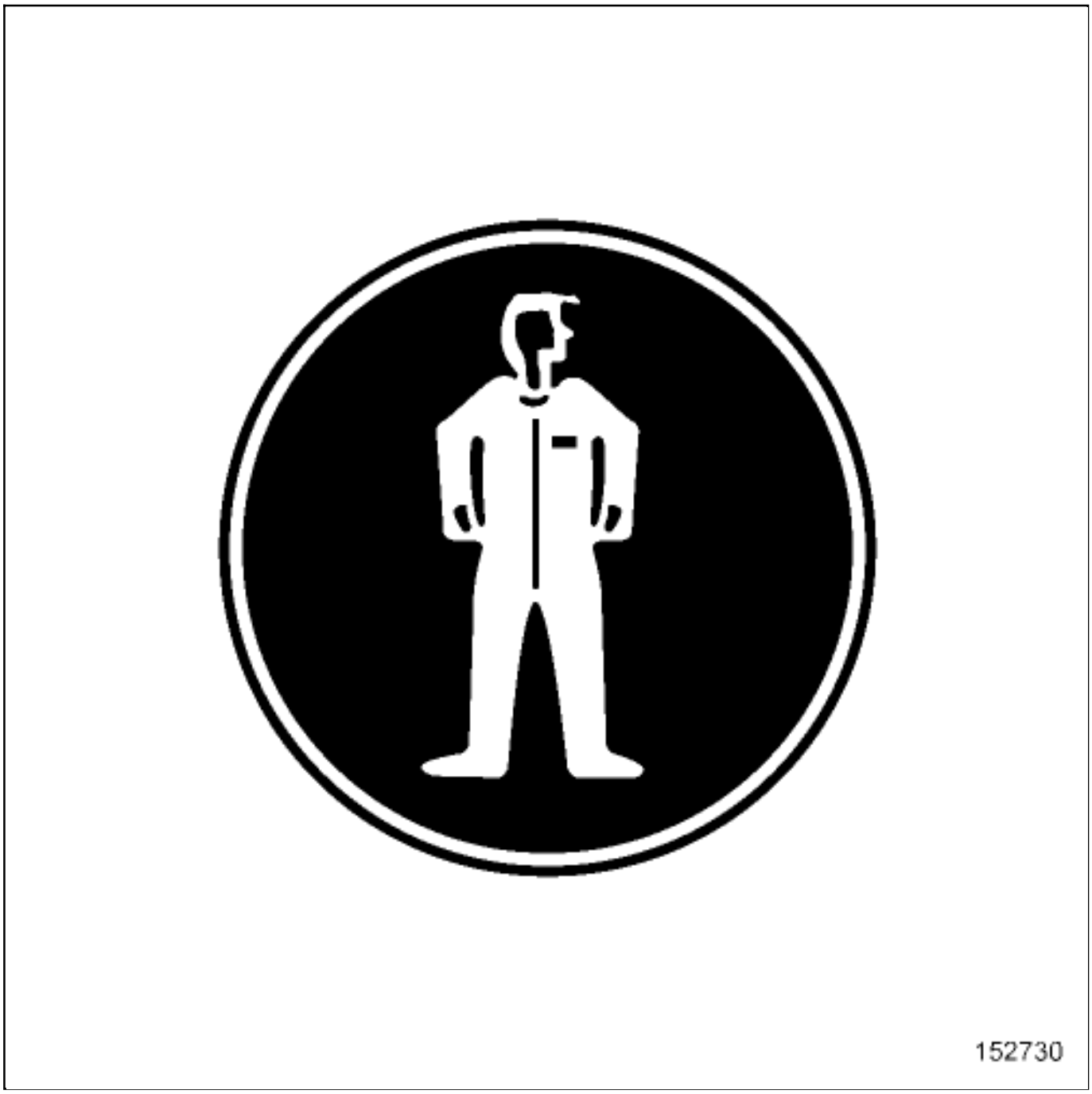

The clothing worn for operations on electrical installations must be made primarily of cotton or equivalent materials which, in the event of a short circuit, will not melt or catch fire quickly.

In case of an accident, if a synthetic clothing article melts and adheres to the skin, it will be more difficult to treat the patient.

2. SAFETY SHOES

It is compulsory to wear safety shoes, or protective shoes, or work shoes for any person who, during work, is at risk of foot injury due to crushing or penetration through the sole of the shoe. In most cases, this obligation concerns electricians, because of the risk of workplace injury during an operation.

Safety shoes must be electrical class 00 or 0.

- Personal protective equipment conforming to European standards:
  - EN20345: Personal protective equipment - Safety shoes,
  - EN50321: Electrically insulating shoes for work on low voltage installations,

3. FACE SHIELD

❑ It is compulsory to wear eye protection and face protection for any person performing an operation involving a particular risk of an injury to the face. For an electrician, the face shields must protect against the following effects:

- projections of solid particles,
- electric arcs,
- UV and IR radiation,
- projections of liquid.

The face shields are classified according to their level of protection for each effect listed above.

The electrician must use eye or face protection suitable for the risks inherent in the operation performed.

For electricians carrying out work operations with low voltage, it is compulsory to wear facial screens that complies with the standard. The use of this shield meets the requirements for work with low voltage,

work in the vicinity of low voltage and operations involving a short circuit risk.

Safety goggles, although they protect the eyes, do not meet the regulatory safety requirements for low voltage electricians.

- Personal protective equipment conforming to European standards:
  - EN 166: Personal eye protection, specification,
  - EN 170: Personal eye protection, ultraviolet filter (100% anti-UV).

4. INSULATING GLOVES

Some specified operations require that standard-compliant insulating gloves be worn due to the presence of or contact with adjacent exposed live parts.

The insulating gloves must be suitable for the voltage involved and the nature of the work performed.

There are 6 classes of insulating gloves based on the operating voltage.

Insulating gloves must be checked visually before and after each use.

Gloves must be checked to ensure they are in good condition, have no trace of cracking, tears or holes, even very small ones, which can be checked by inflating the glove. Any glove with a defect must be removed from service.

For the periodic checks, it is recommended, according to the user instructions:

- for insulated gloves classes 00 and 0, to check them by inflating,
- they must be marked with the date of first use.

Insulating gloves must be kept in protective boxes or bags and not come in contact with sharp or pointed objects. They must not be compressed or folded, nor stored close to a heat or light source.

Insulating gloves used to perform handling operations or for life-saving must not be used for electrical operations because of their low mechanical strength.

Gloves for electrical type operations must have mechanical, chemical and other characteristics suitable for the work conditions (see supplier's user and maintenance instructions and instructions for use of glove protectors for mechanical protection).

They protect the hands from direct or indirect contact with an active electrical conductor.

Personal protective equipment conforming to European standards:

- Insulated gloves for electrical work, latex class 00 minimum,
- test voltage 2500 V, operating voltage 500 V.
- Personal protective equipment class III,
- International: IEC 60 903,
- European: EN 60 903.

5. VOLTAGE ABSENCE DETECTOR

This is a device specifically designed for this purpose, to check the absence of the rated voltage.

The common terms "voltage absence tester" or "voltage absence testing device" are applied to "voltage detectors" that perform only this function, as defined in the current standards. The term "voltage detector" is broader in scope because it includes the "absence" and the "presence" of voltage.

Note:

Measuring devices must not be used for voltage detection.

Low voltage connection accessories must conform to standard EN 61010 – 031.

Voltage detectors can be light-indicating and/or sound-indicating, but in all cases they must be suitable for the voltage of the installations on which they are used. The user instructions for each piece of equipment must be observed.

The conducting parts of the probes or devices to be hooked onto the conducting parts or onto the terminals must have a degree of protection equal to IP2X or IPXXB defined by standard EN 60529, without prohibiting voluntary contact with the connection point.

Rapid plug-in connection devices and adjusting buttons of measuring devices must also have a degree of protection equal to IP2X or IPXXB defined by standard EN 60529.

When using these devices with low voltage, the use of insulated gloves is compulsory when the operator is working in the presence of exposed parts presenting risks of accidental direct contact.

The leads of the voltage absence detectors or the measuring leads, whether or not they are an integral part of the portable measuring devices, must be kept in good condition. Their insulation condition must be checked visually before each use.

Immediately before each operation performed with this equipment and immediately after this operation, it is essential to check that it operates correctly, either using the active parts remaining under voltage nearby, or using an independent source device provided by the manufacturer (for example: automatic test).

The voltage absence check must be performed on each active conductor, including the neutral, using a voltage absence testing device specially designed for this purpose. It must be performed at the work site or as close as possible to it, ensuring the electrical continuity between the voltage absence test point and the work site.

The user instructions for each piece of equipment must be observed.

- Personal protective equipment conforming to European standards:
  - International: CEI 61243-3,
  - European: EN 61243-3 - Low voltage detectors,

- European: EN 61243-5 - Voltage indicating systems,

French: NF EN 61243-3 and NF EN 61243-5.

Repair-00x08x05-02x21-1-1-1.xml

XSL version : 3.02 du 22/07/11

PLASTICMATERIALBODYWORKCOMPONENT:REPAIR

Note, one or more warnings are present in this procedure

1. PROCEDURES FOR REPAIRING PLASTICS

❑

WARNING

Always wear protective gear (gloves, goggles and breathing masks).

Use extra ventilation source.

Use a supplied air mask if the area is not ventilated.

1- SPECIAL NOTES FOR REPAIRING PLASTICS

❑ Procedure 1 : repairing a deep scratchon a plastic chassis element.

❑ Procedure 2 : repairing a crackon a plastic chassis element.

❑ Procedure 3 : repairing a holeon a plastic chassis element.

❑ Procedure 4 : repairing a mounting bracketon a plastic chassis element.

❑ Procedure 5 : partial replacementof an element by cuting.

❑ Procedure 6 : partial replacementof an element by cuting with patcht drilling.

2. PROCEDURE 1

❑ Repairing a deep scratch on a plastic chassis element

1- BONDING METHOD

Note:

Before any repairs, check the reparability of components made from plastic materials.

(see 50A, General information, Products for plastic material bodywork components: Description) .

(see 50A, General information, Plastic material bodywork component: Precautions for the repair) .

- Wash the component in soapy water and rinse in clean water.

❑ Clean the area to be repaired with a LINT-FREE CLOTHsoaked in ANTISTATIC THINNERVehicle: Parts and consumables for the repair (04B, Consumables - Products).

❑ Wipe the area with a clean, dry LINT-FREE CLOTHVehicle: Parts and consumables for the repair (04B, Consumables - Products).

❑ Surface the scratch using the orbital sander with a P 150.

- Blow the component and clean the area to be repaired with the cleaner included in the Plastic repair kit.

- Apply the adhesive primer included in the Plastic repair kit to the damaged area.

- Leave the adhesive primer to dry (see product technical sheet).

- Prepare the bi-component repair mastic (see 50A, General information, Products for plastic material bodywork components: Description) .

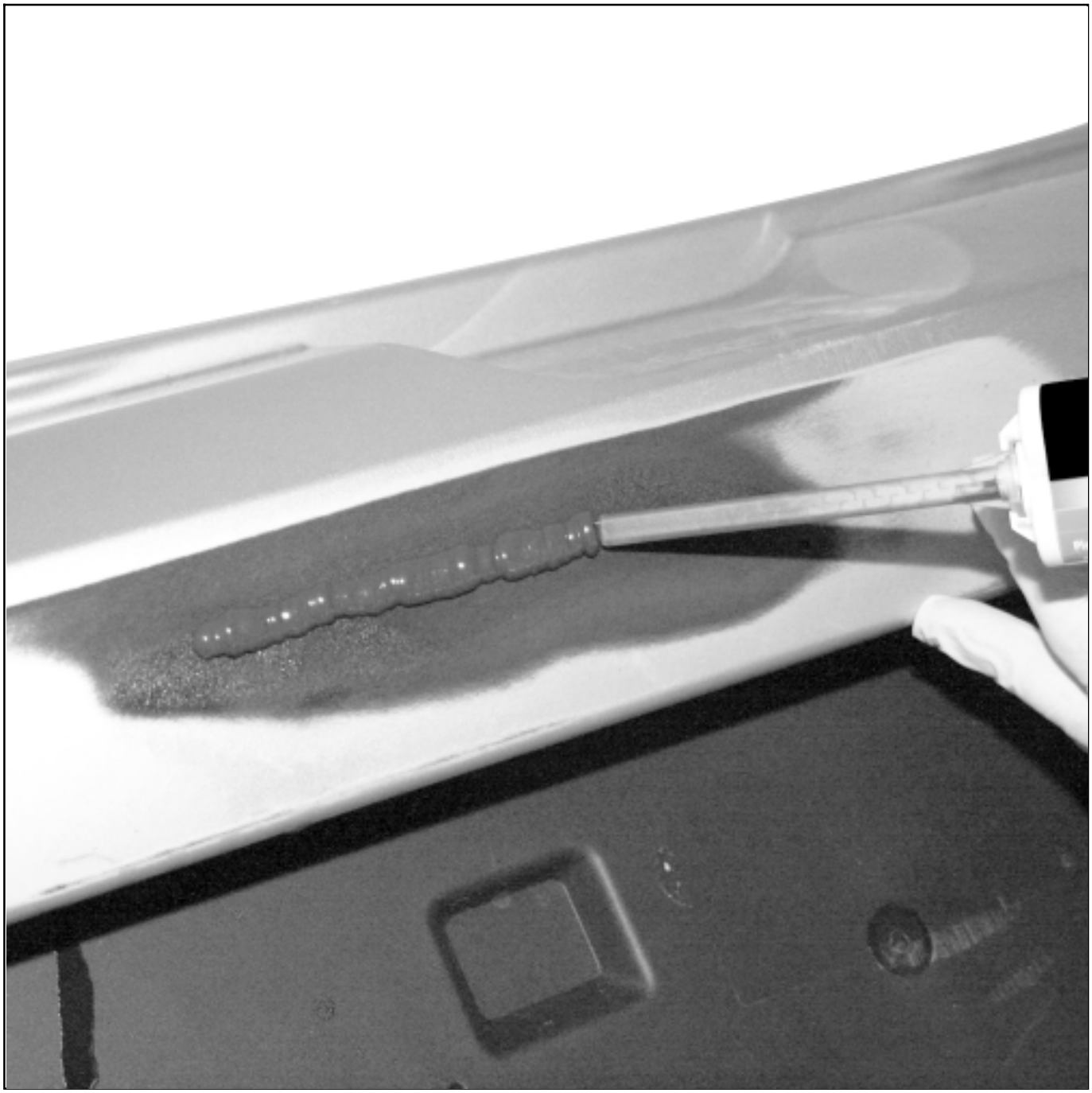

- Apply the bi-component repair mastic to the component.

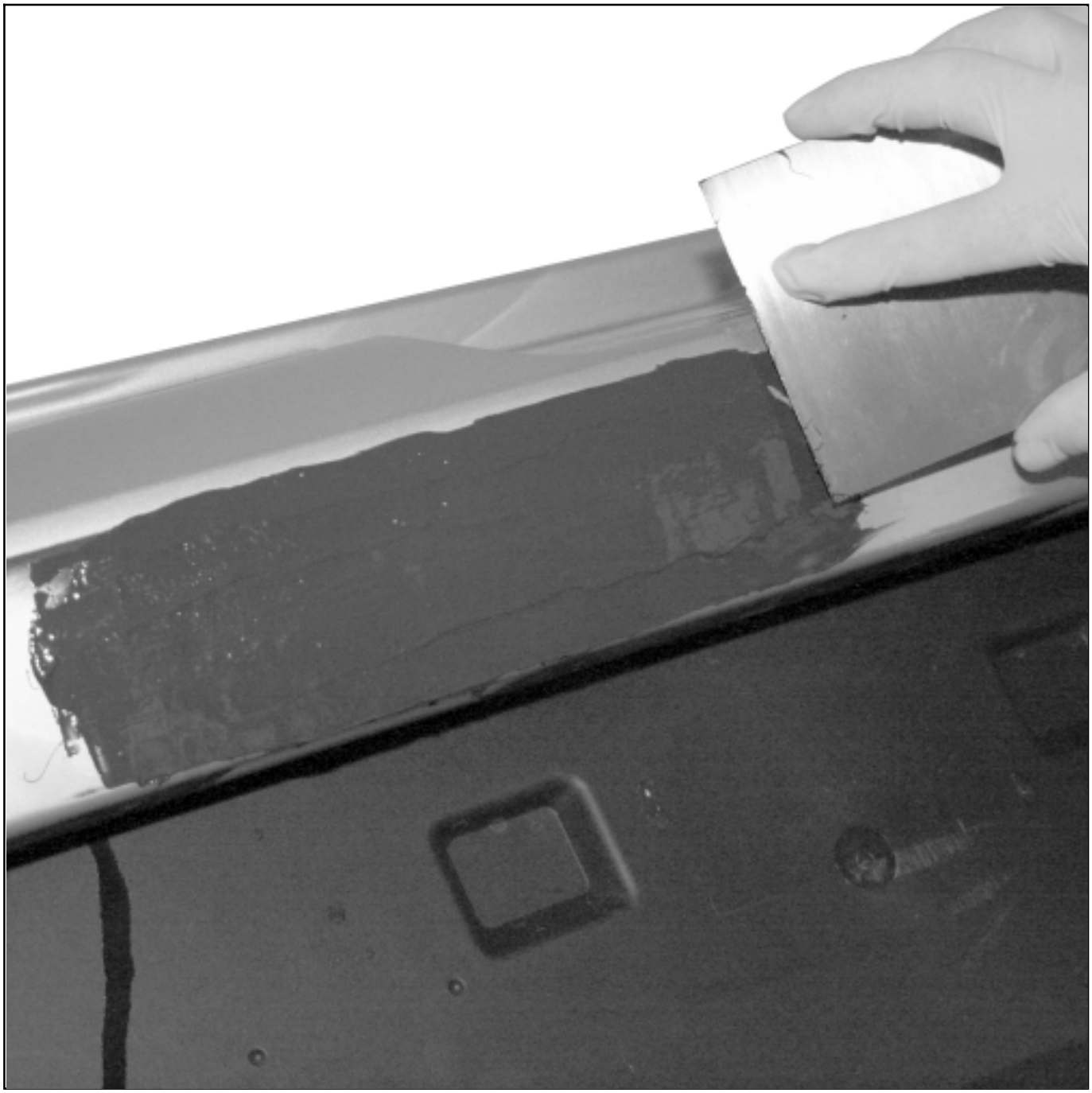

- Smooth using a mastic block creating a dome shape.
- Leave the bi-component repair mastic to dry (see product technical sheet).

- Surface with a P 150then finish with a P 240.
- Blow the component and clean the area to be repaired with the cleaner included in the Plastic repair kit.

- If necessary, apply a finishing mastic(see product technical sheet) **Vehicle: Parts and consumables for the repair** (04B, Consumables - Products).

- Sand the finishing masticwith a P 150then finish with a P 240.

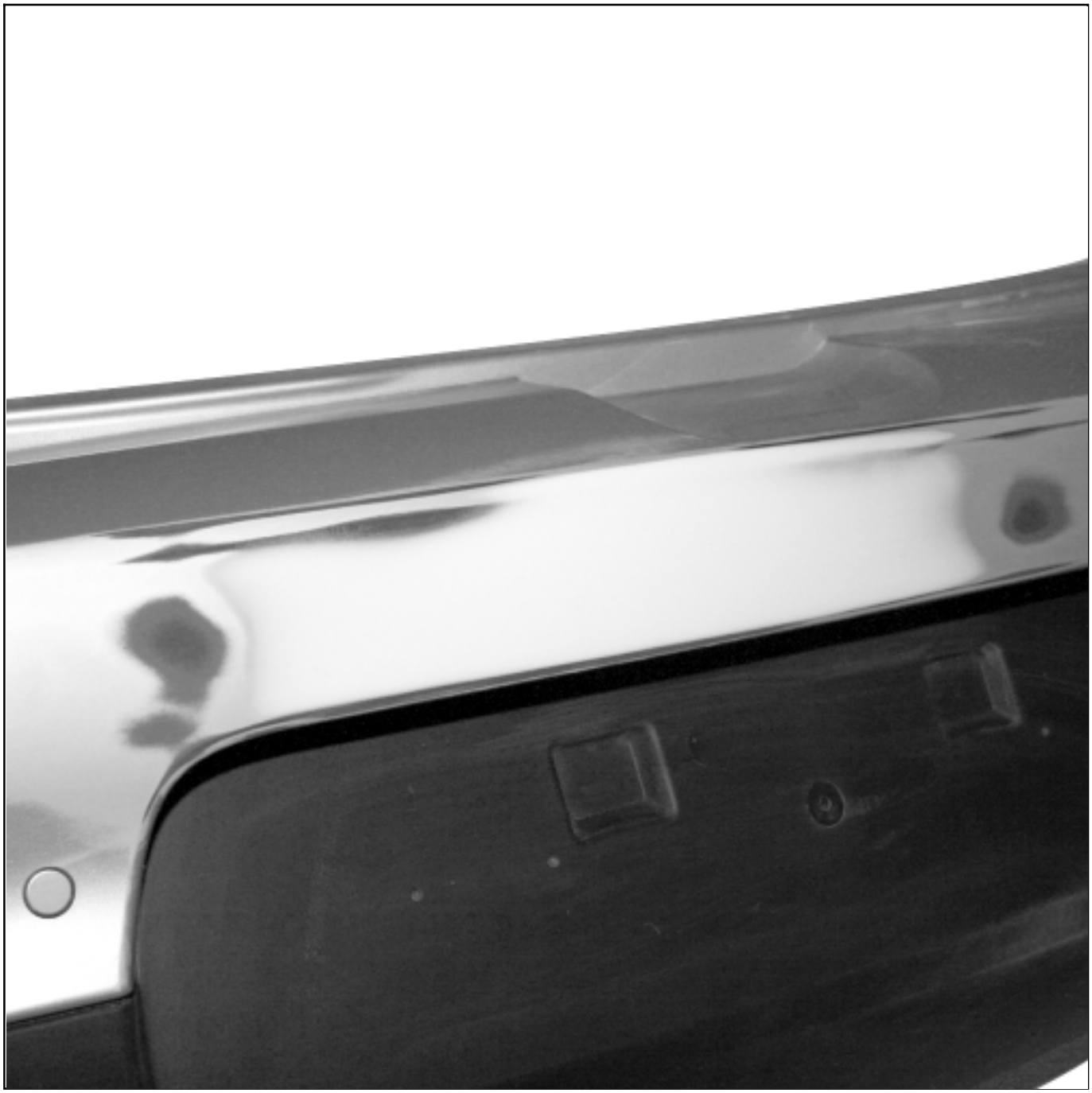

❑ Follow the paint application procedure according to the material concerned:

- **SMC bodywork component: Preparation and paint range** (Technical Note 592A, 95A, Paint application procedure on plastic),
- **Polypropylene / polyethylene bodywork component: Preparation and paint range** (Technical Note 592A, 95A, Paint application procedure on plastic),
- **Noryl bodywork component: Preparation and paint range** (Technical Note 592A, 95A, Paint application procedure on plastic),
- **ABS bodywork component: Preparation and paint range** (Technical Note 592A, 95A, Paint application procedure on plastic).

2- RESIN EPOXY METHOD

Note:

Method apply only on RTM component.

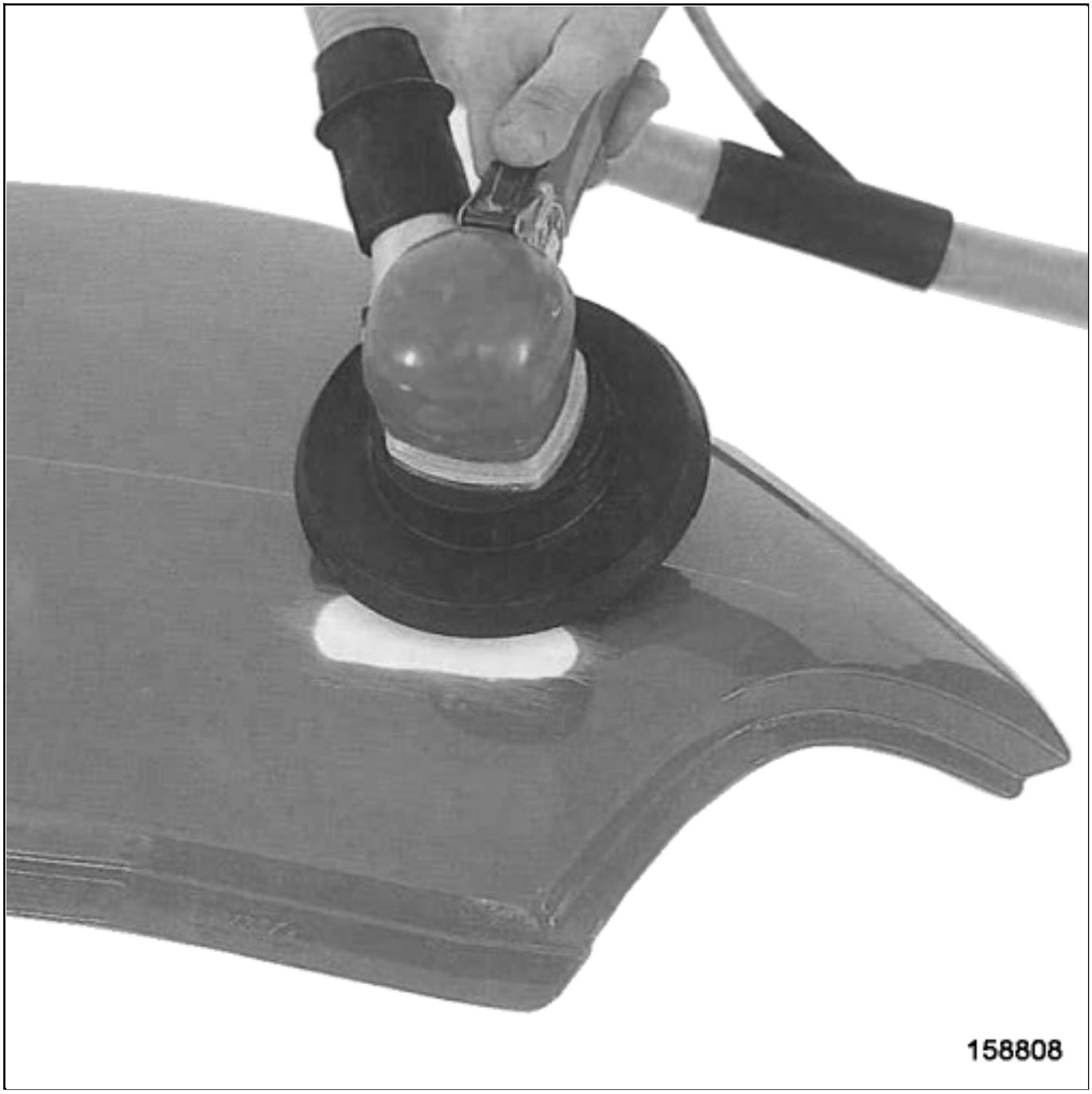

- Chamfering 20 to 30mm around the crack using the orbital sander with a P 150.

- Sand the paint around the zone to be repaired using the orbital sander with a P 150

- Blow the component and clean the area to be repaired with the Acetone(see product techincal sheet).

- Prepare the Epoxy resin(**see 50A, General information, Products for plastic material bodywork components: Description**) .

- Wet the chamfer using à brush soaked with Epoxy resin.

- Add short fibres with resin(50 % maxi.).

- Apply the mixture using a spatula.

Note:

After 15 minutes,accelerate the hardening in drying oven or in infrared drying device(60° C maxi at a distance of 70 cm).

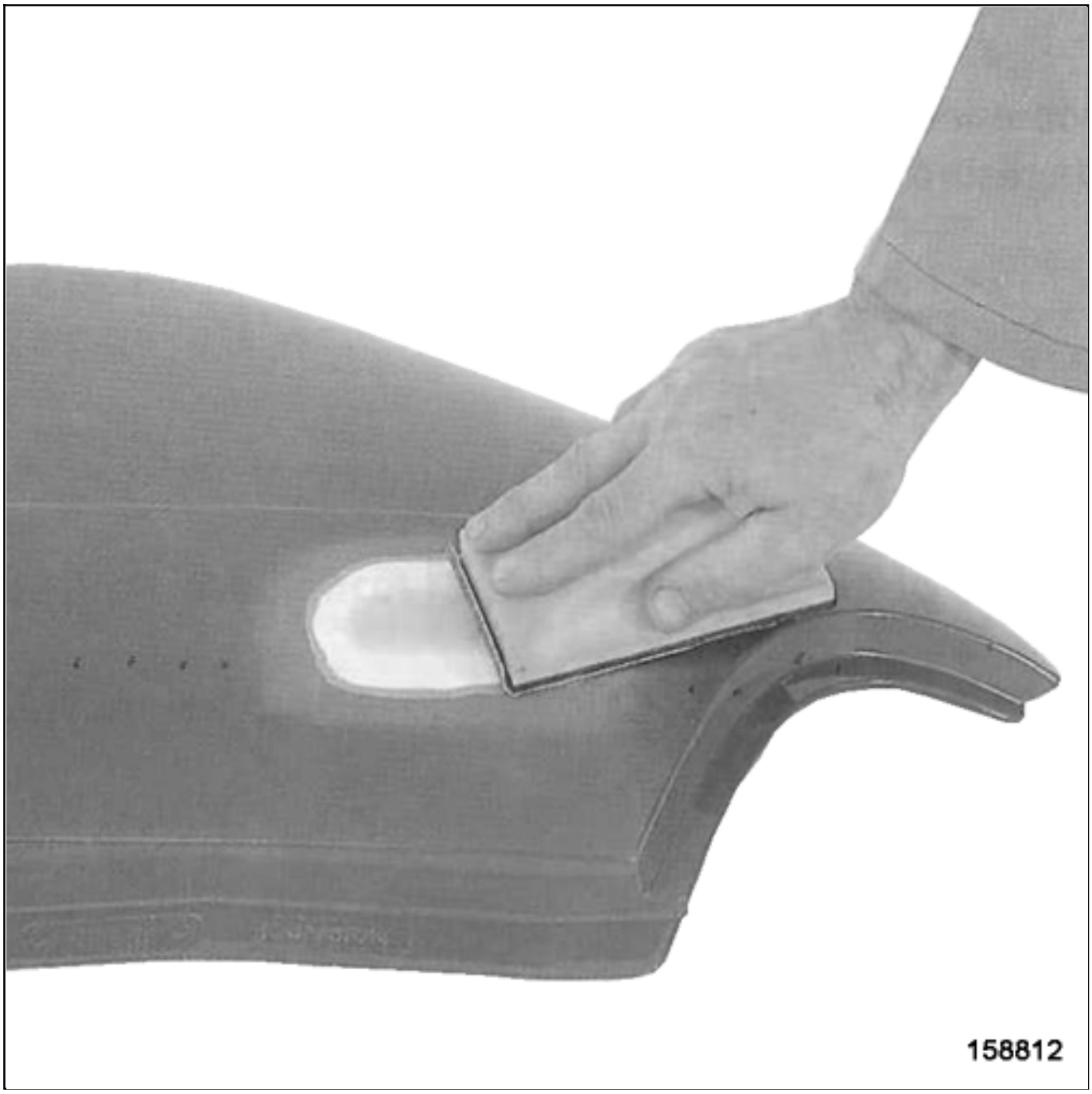

-

Sand using the orbital sander with a P 80then with a P180and P240.

- Apply if necessary a finishing mastic(see product technical sheet). (see **Vehicle: Parts and consumables for the repair**)

- Sand the finishing masticusing a P 150then finish using a P240.

3. PROCEDURE 2

❑ Repairing cracks on a plastic chassis element.

1- BONDING METHOD

Note:

Before any repairs, check the reparability of components made from plastic materials.

(see 50A, General information, Products for plastic material bodywork components: Description) .

(see 50A, General information, Plastic material bodywork component: Precautions for the repair) .

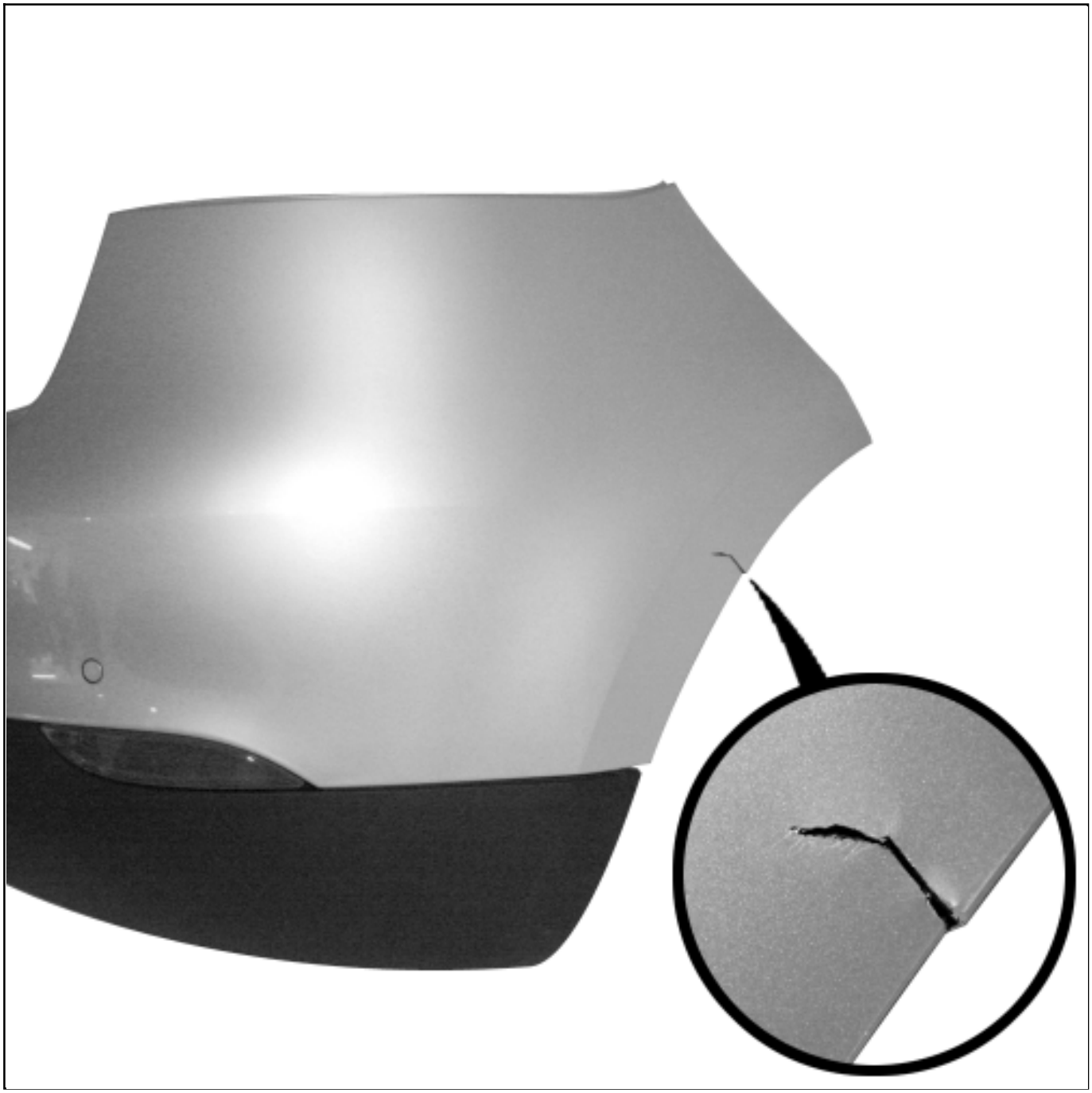

- Wash the component in soapy water and rinse in clean water.

- Clean the area with a clean, dry LINT-FREE CLOTH**Vehicle: Parts and consumables for the repair** (04B, Consumables - Products).

- Wipe the area with a clean, dry LINT-FREE CLOTH**Vehicle: Parts and consumables for the repair** (04B, Consumables - Products).

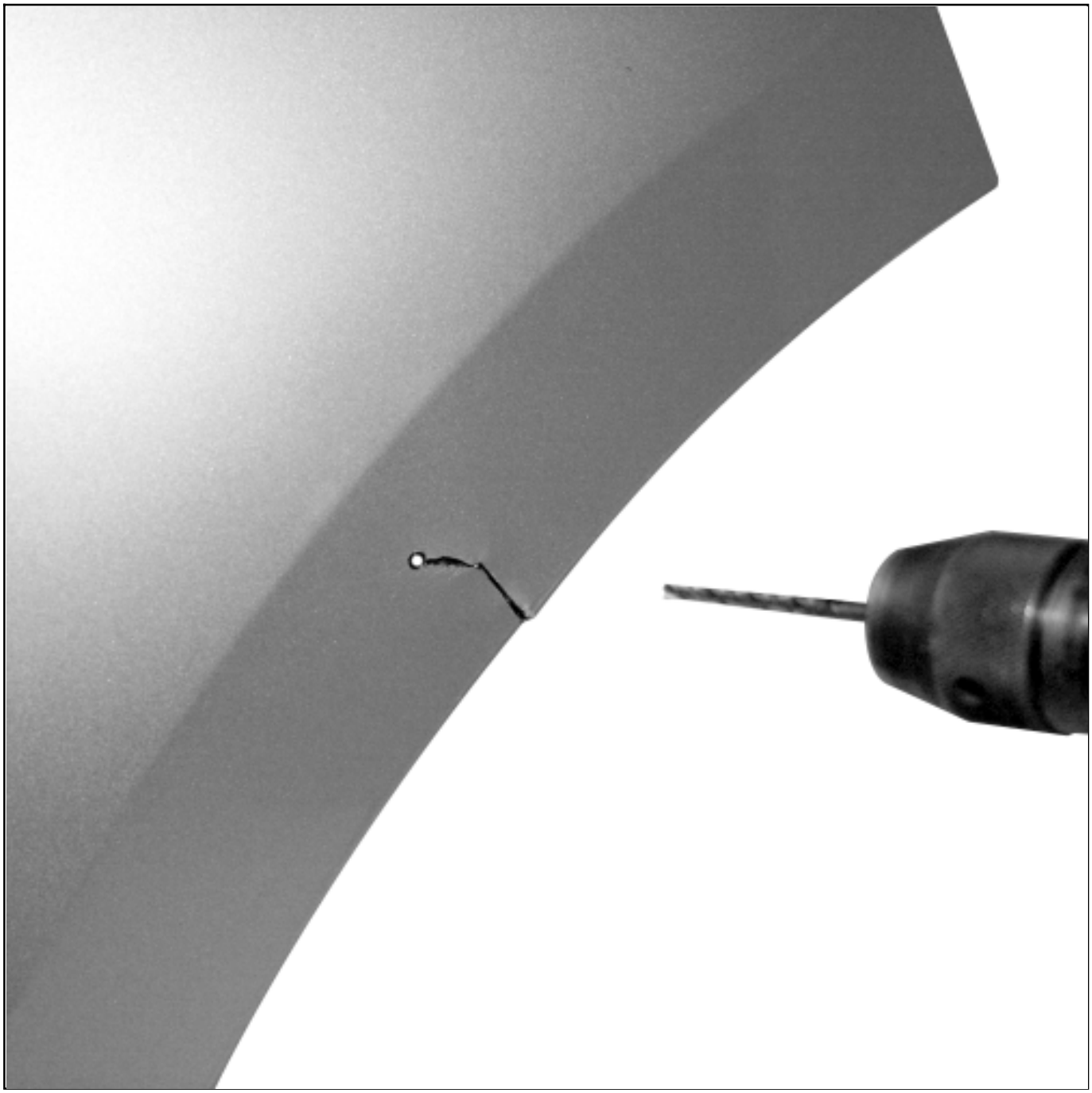

Drill the end of the crack using a 4 mmdrill bit to stop it spreading.

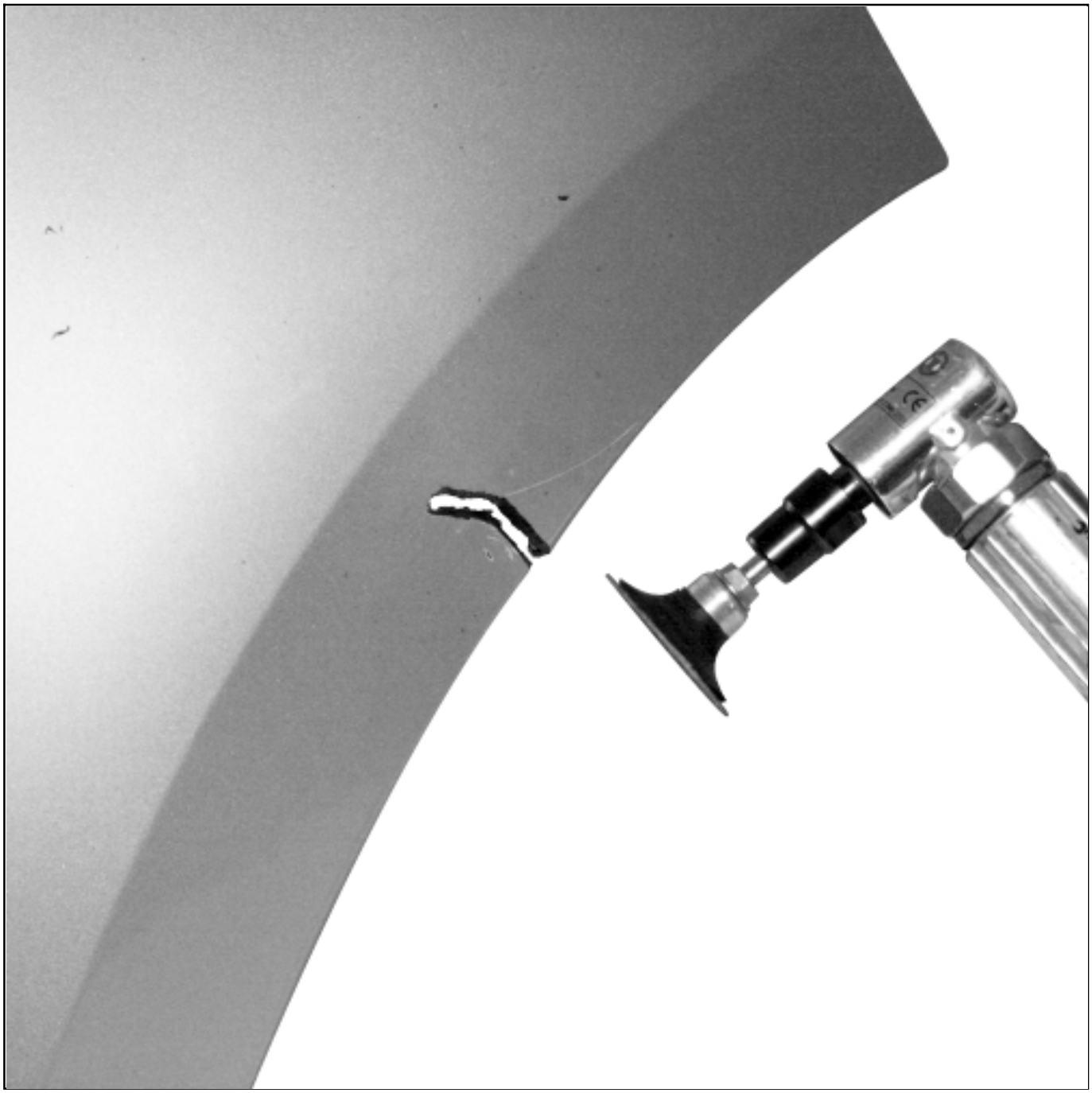

- Extend the length of the crack by 2 mmusing an angle grinderor a sharp tool.

Chamfer the crack on the exterior side using an angle grinder or a belt sander equipped with a P 120 abrasive pad.

- Surface the interior and exterior areas to be repaired with a P 150.

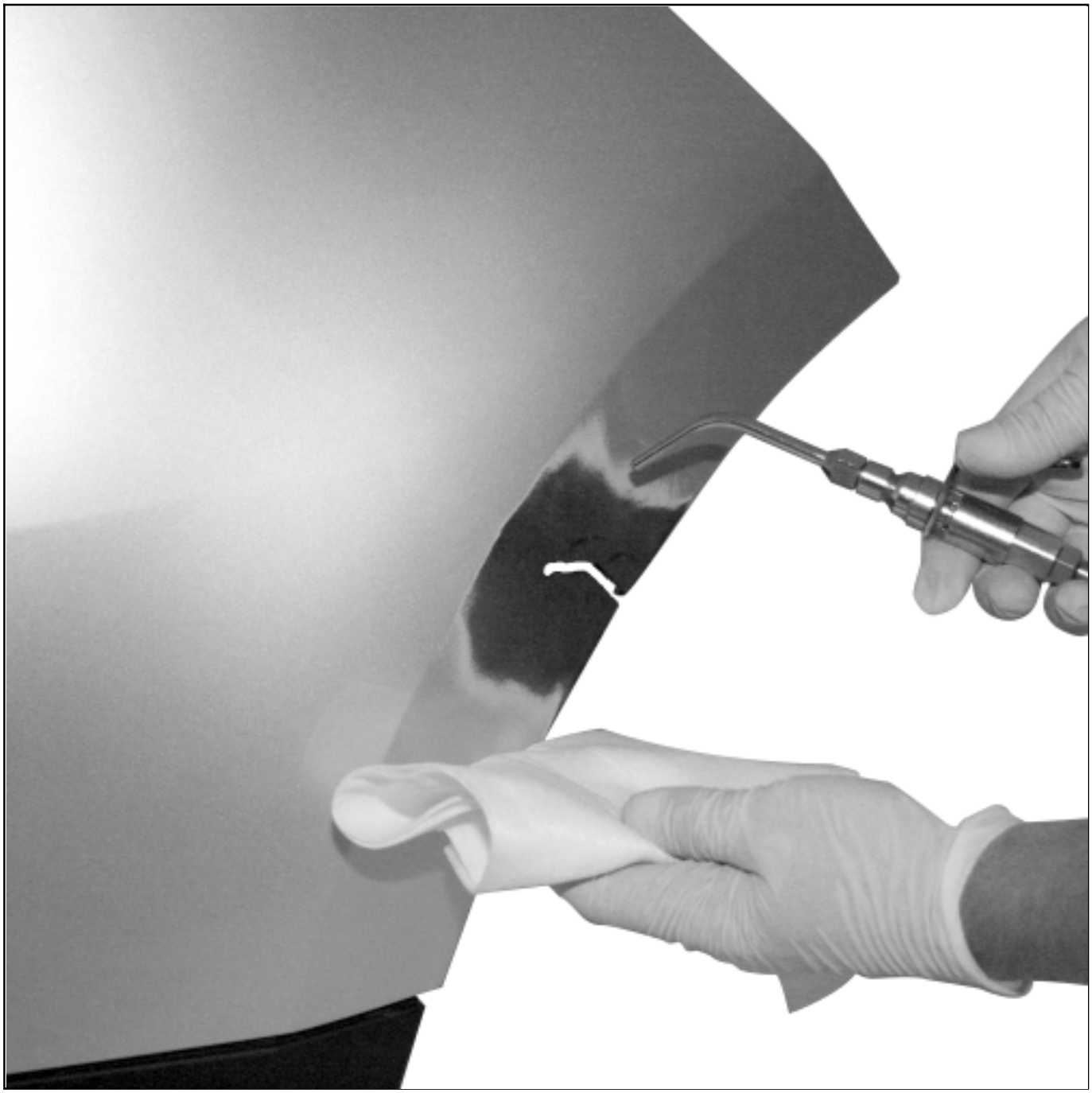

- Blow the component and clean the area to be repaired with the cleaner included in the plastic repair kit box.

- Apply the adhesive primer included in the plastic repair kit to the interior and exterior areas.

- Leave the adhesive primer to dry (see product technical sheet).

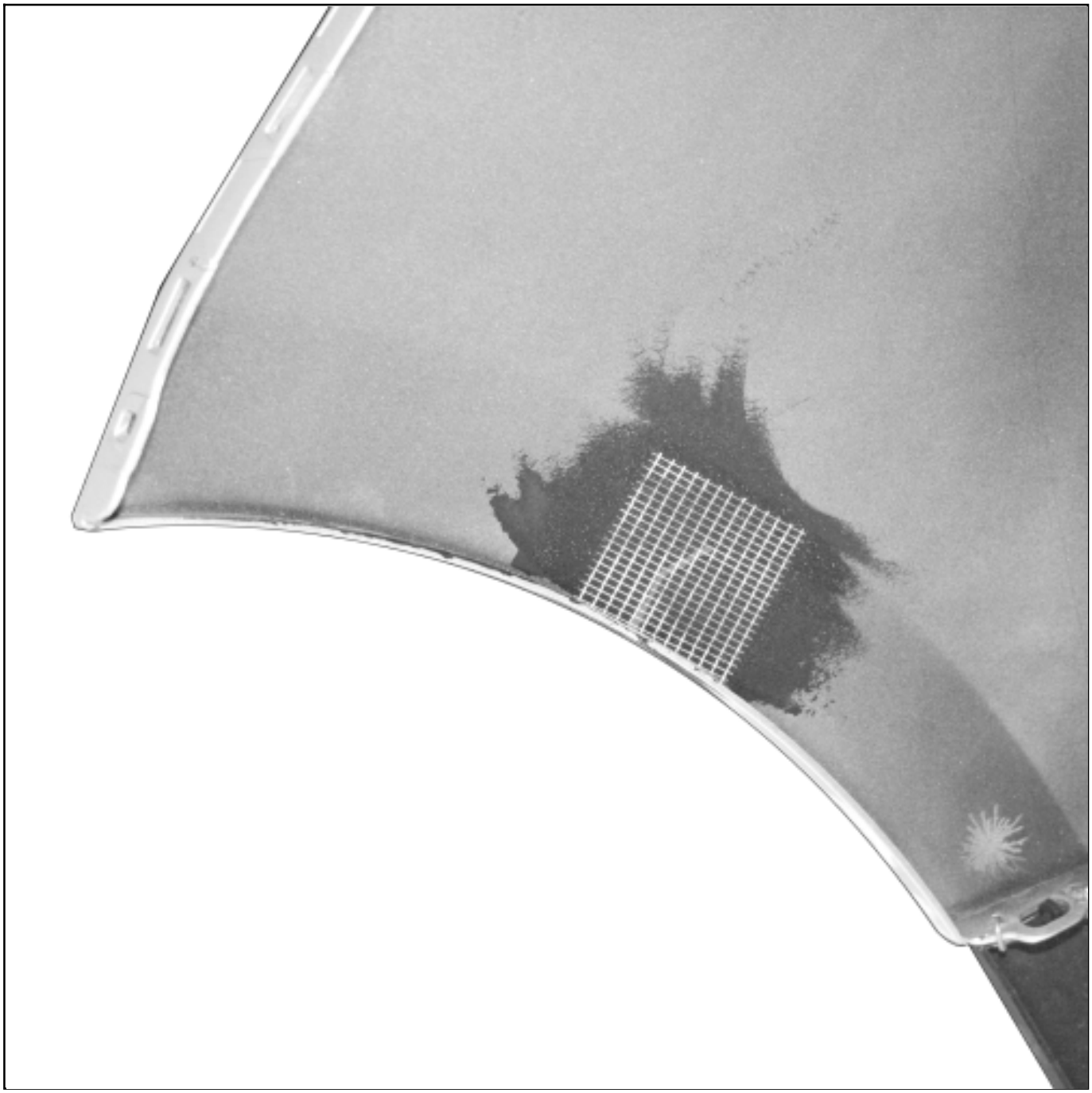

- Adjust a piece of reinforcing film (cloth)suitable for repairing the inside of the component.

- Prepare the bi-component repair mastic(see 50A, General information, Products for plastic material bodywork components: Description) .

- Extrude a narrow bead around the area to be repaired on the inside of the component and apply reinforcing film (cloth).

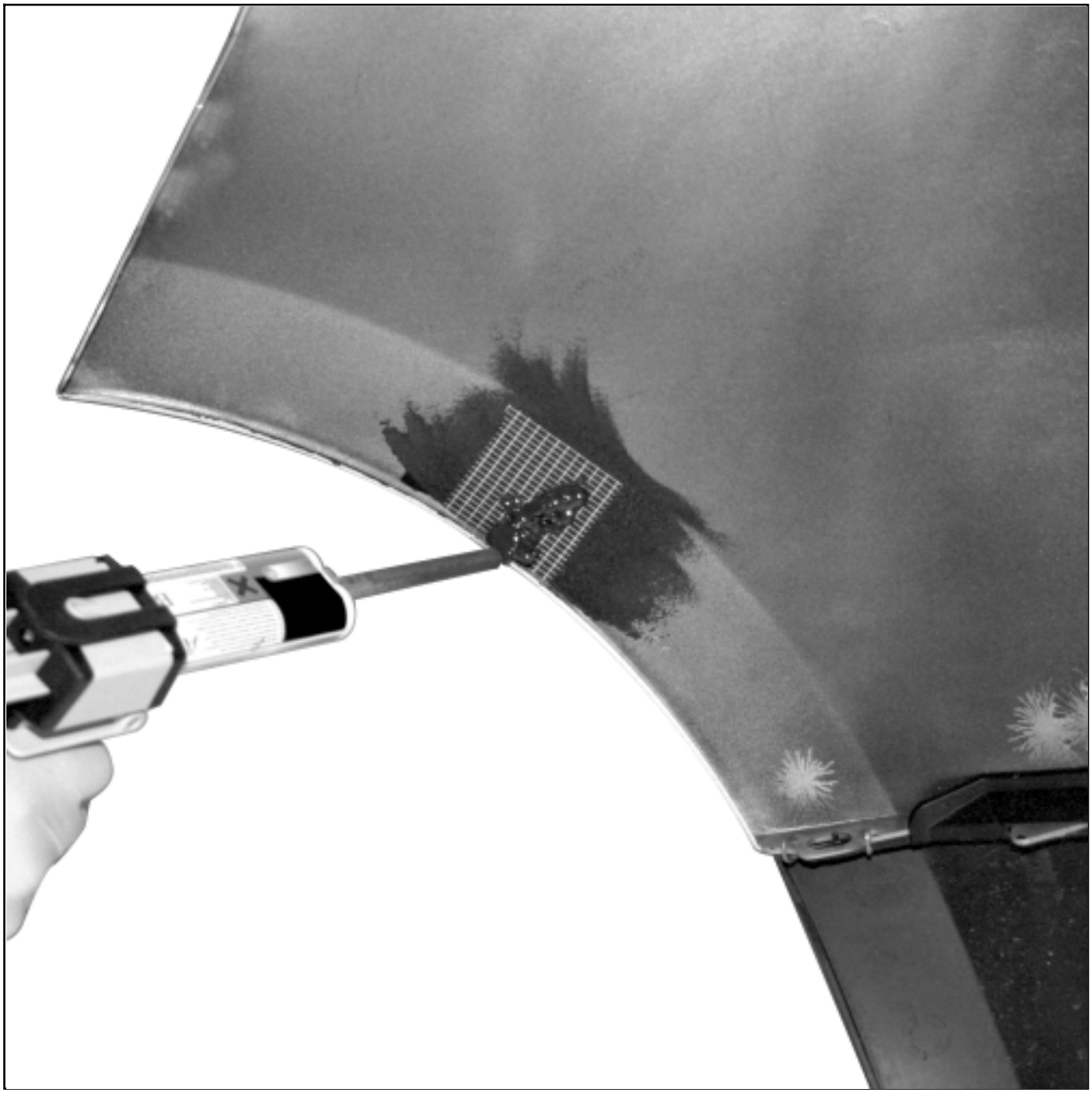

- Extrude a thick bead on the reinforcing film at the crack.

- Smooth using a spatula.

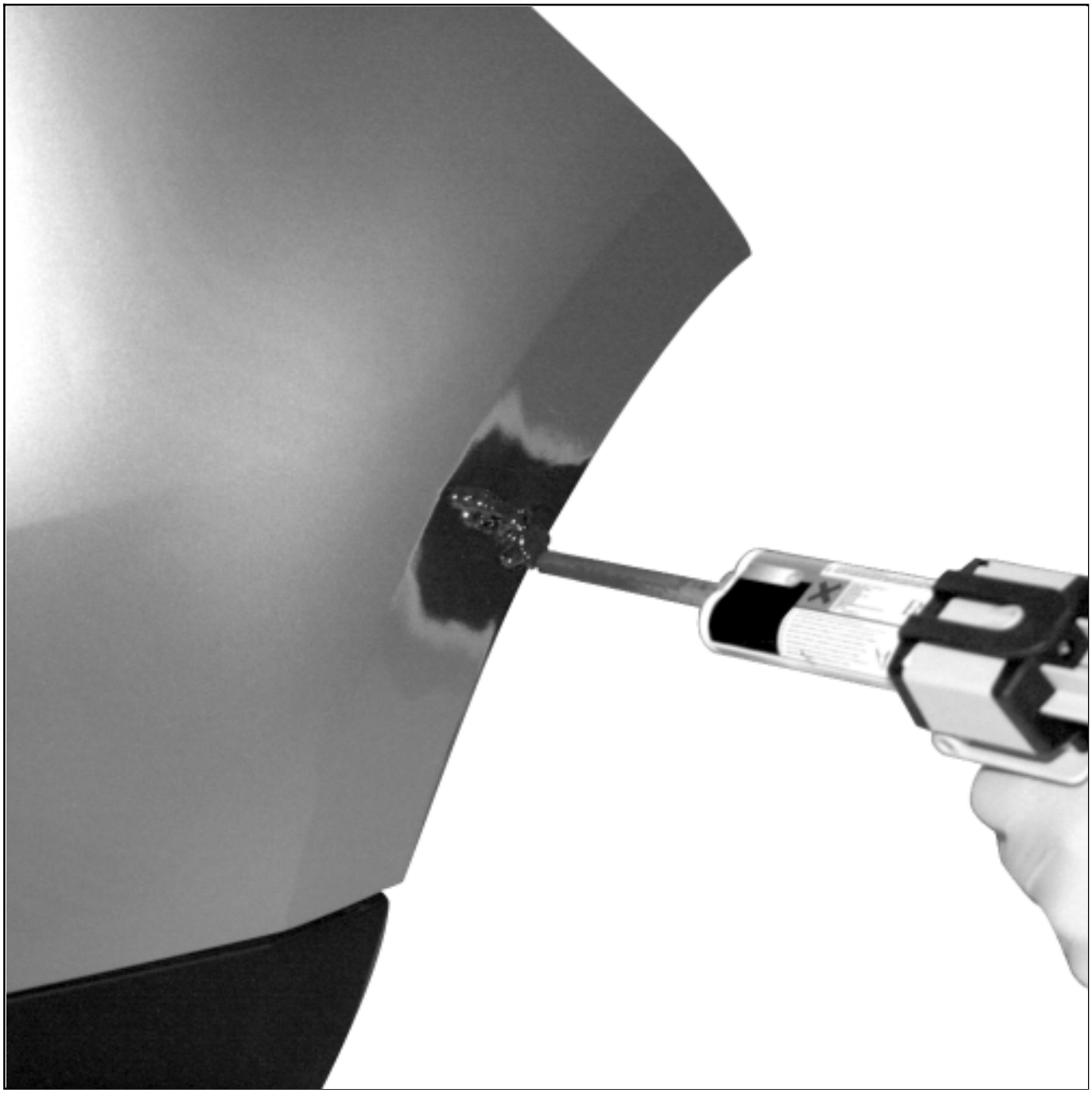

- Extrude a thick bead in the chamfer on the exterior side.

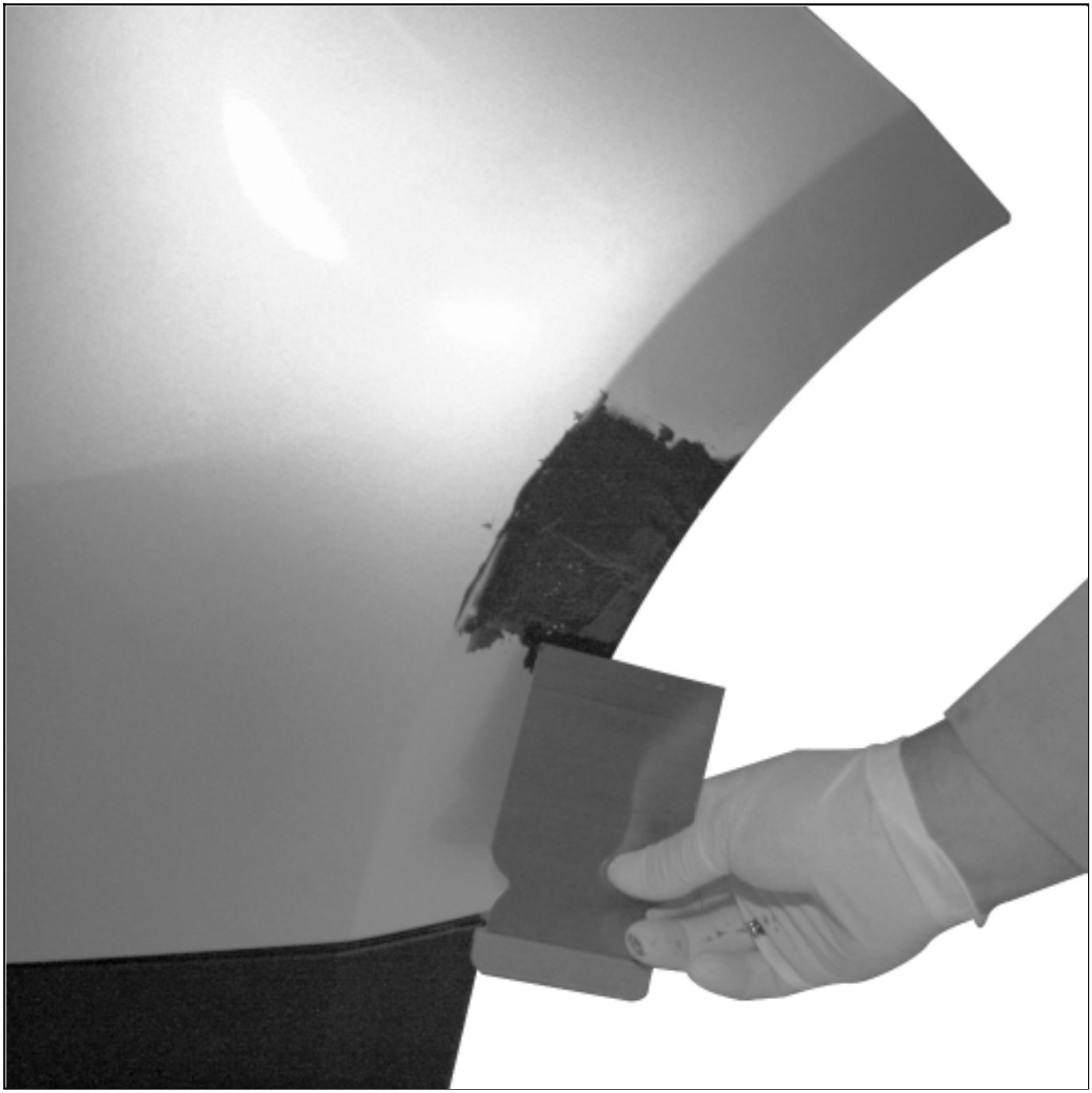

- Smooth using a spatula.
- Leave the bi-component repair mastic to dry (see product technical sheet).
- Surface on the exterior side with a P 150 then finish with a P 240.
- Blow the component and clean the area to be repaired with the cleaner included in the Plastic repair

kit .

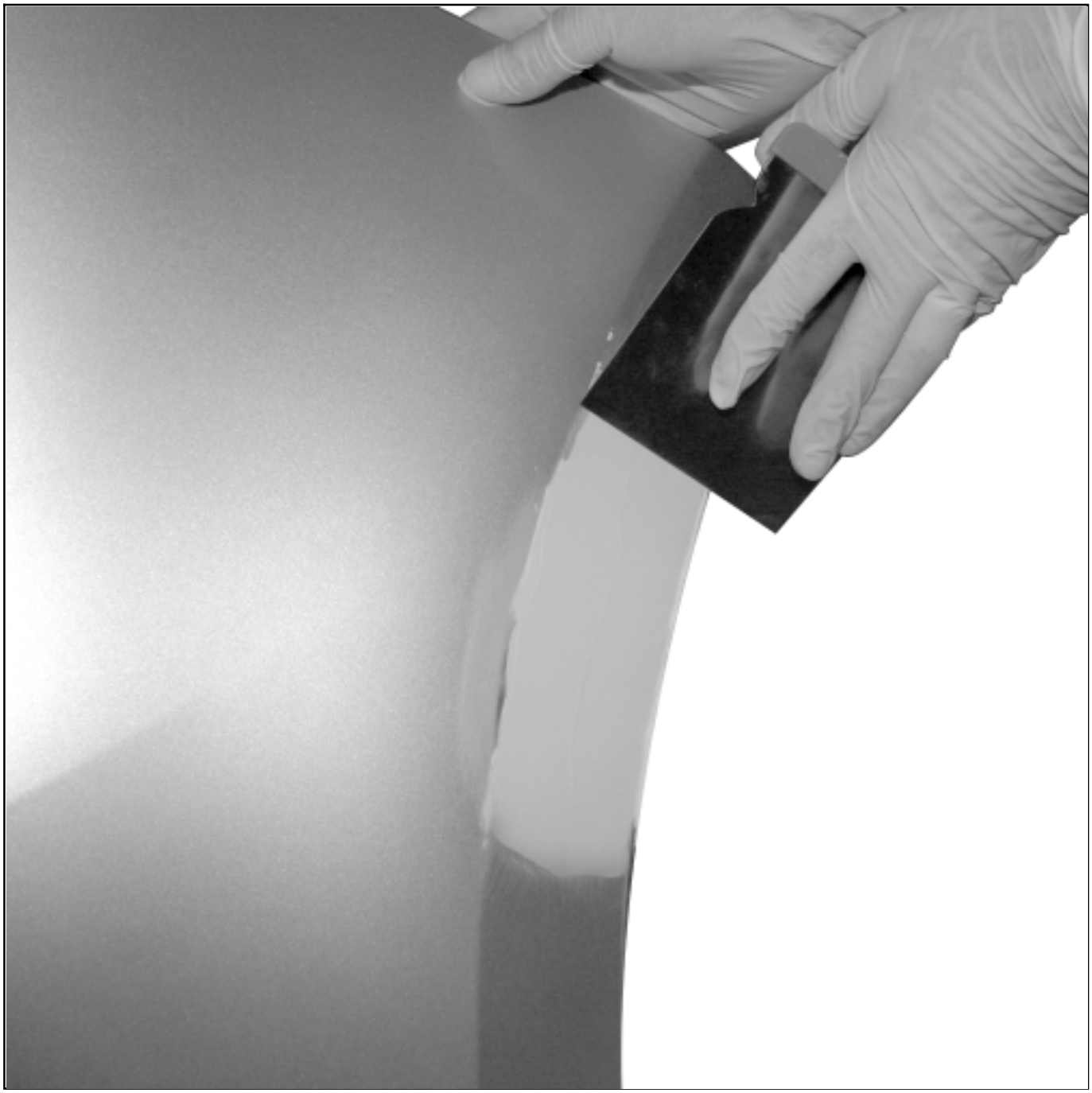

❑

If necessary, apply a finishing mastic(see product technical sheet) Vehicle: Parts and consumables for the repair (04B, Consumables - Products).

❑

Sand the finishing masticwith a P 150then finish with a P 240.

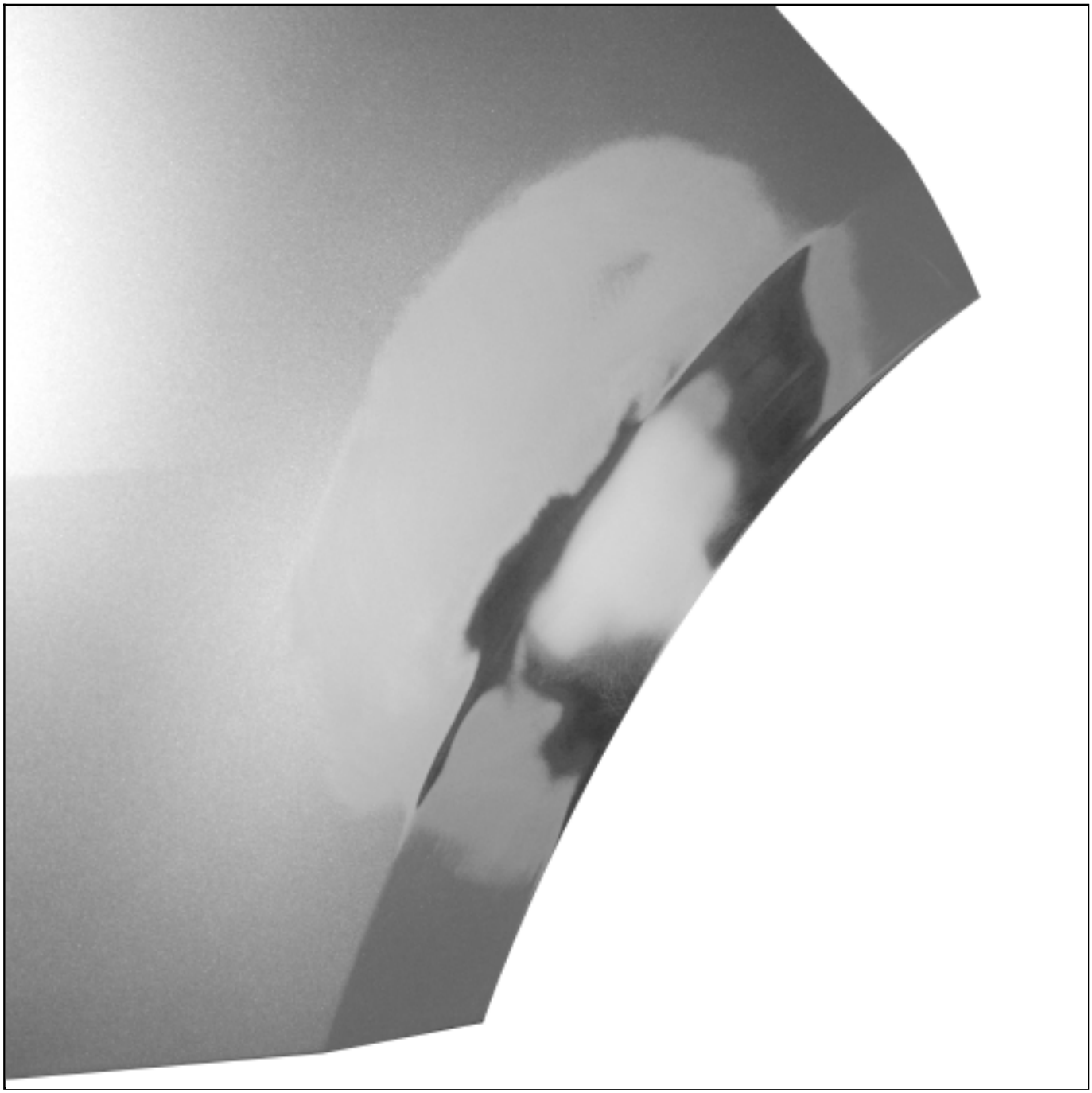

Follow the paint application procedure according to the material concerned:

- **SMC bodywork component: Preparation and paint range** (Technical Note 592A, 95A, Paint application procedure on plastic),
- **Polypropylene / polyethylene bodywork component: Preparation and paint range** (Technical Note 592A, 95A, Paint application procedure on plastic),
- **Noryl bodywork component: Preparation and paint range** (Technical Note 592A, 95A, Paint application procedure on plastic),

■

ABS bodywork component: Preparation and paint range (Technical Note 592A, 95A, Paint application procedure on plastic).

2- WELDING METHOD

Note:

Before any repairs, check the reparability of components made from plastic materials.

(see 50A, General information, Products for plastic material bodywork components: Description) .

(see 50A, General information, Plastic material bodywork component: Precautions for the repair) .

- Wash the component in soapy water and rinse in clean water.

- Clean the area to be repaired with a LINT-FREE CLOTHsoaked in ANTISTATIC THINNERVehicle: Parts and consumables for the repair (04B, Consumables - Products).

- Wipe the area with a clean, dry LINT-FREE CLOTHVehicle: Parts and consumables for the repair (04B, Consumables - Products).

- Strip the paint with a P 150 over a width of 50 mm.

- Blow the component and clean the area to be repaired with a LINT-FREE CLOTHsoaked in ANTISTATIC THINNER Vehicle: Parts and consumables for the repair (04B, Consumables - Products).

- Wipe the area with a clean, dry LINT-FREE CLOTHVehicle: Parts and consumables for the repair (04B, Consumables - Products).

- Preheat the soldering iron.

Cut the stainless steel mesh wider at the start of the crack.

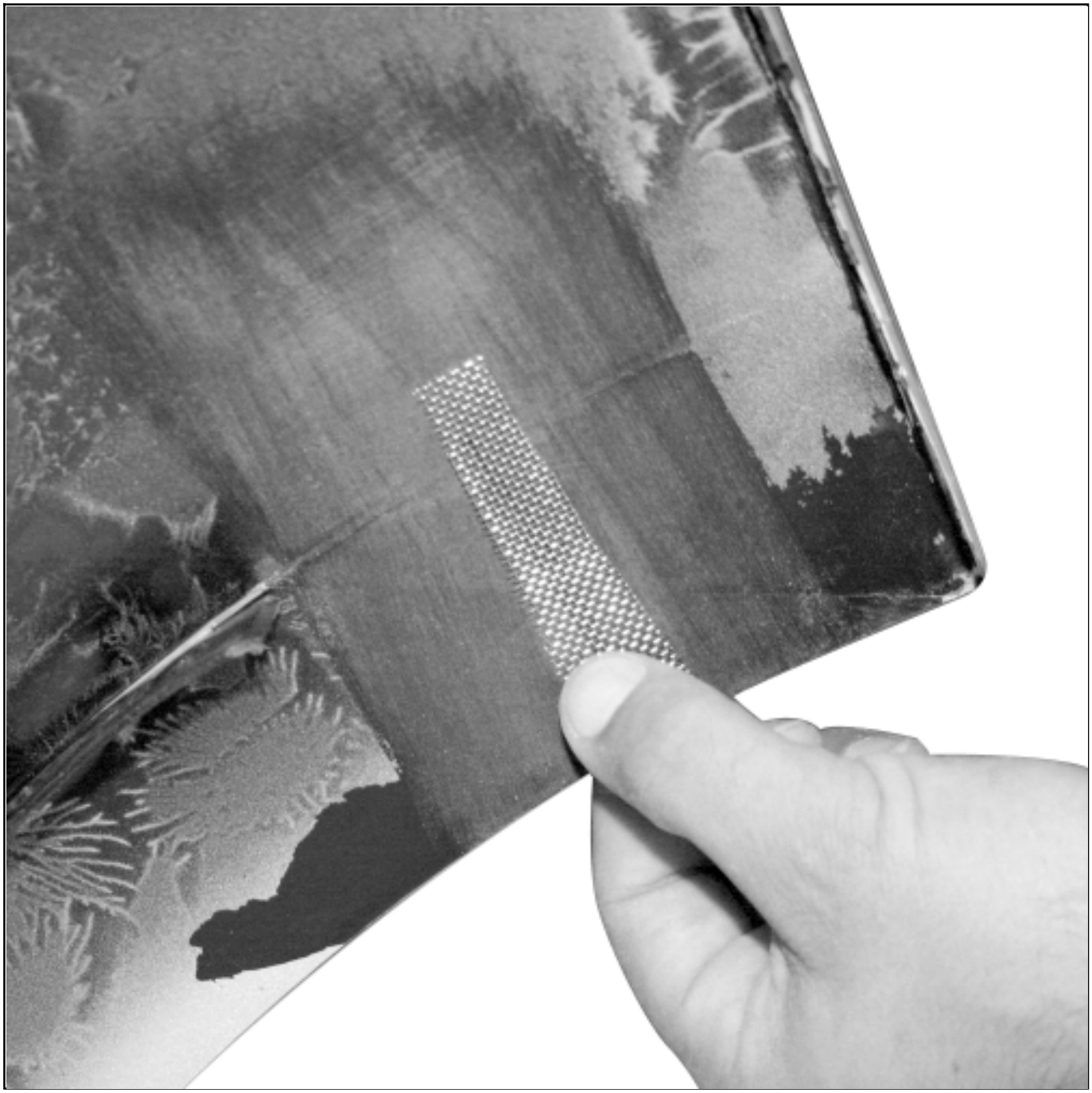

- Adjust the stainless steel mesh according to the shape of the support.

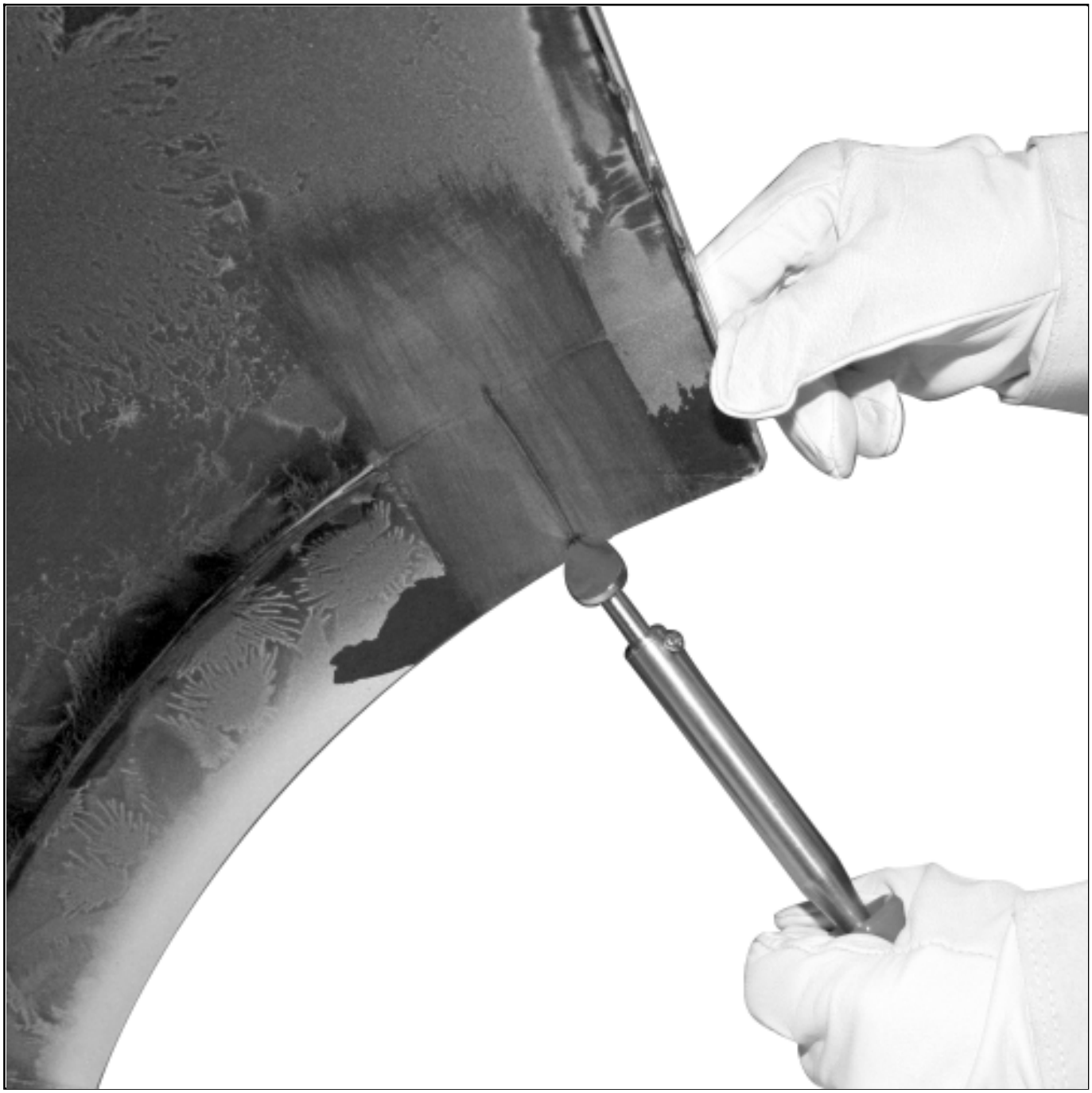

Spot-weld the start of the crack with the tip of the soldering iron in order to maintain the shape.

Cool the spot weld, for two seconds, vigorously with the cooler[Vehicle: Parts and consumables for the repair](04B, Consumables - Products).

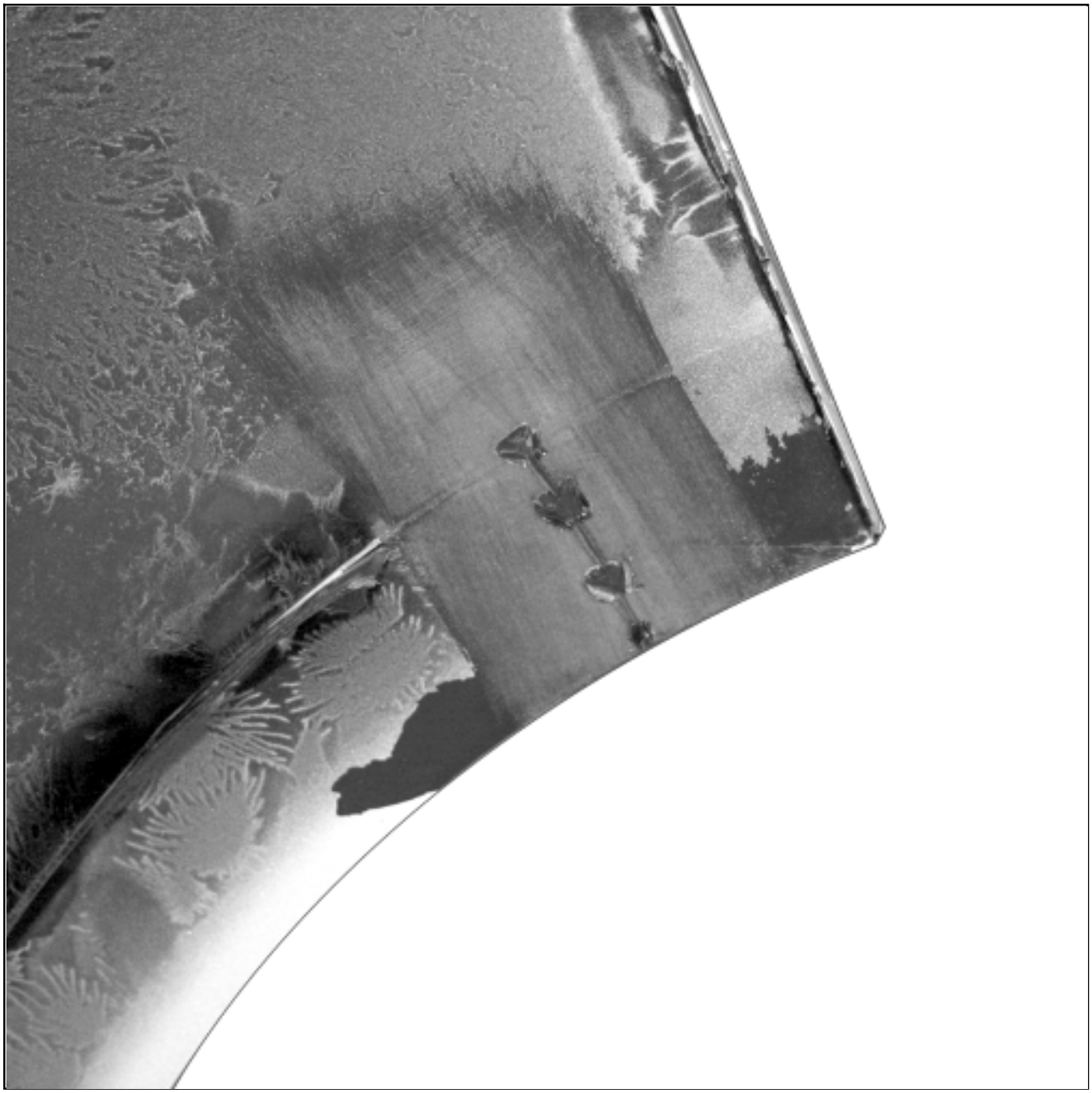

- Repeat this operation along the length of the crack.

- Cool each spot weld, for two seconds, vigorously with the cooler[Vehicle: Parts and consumables for the repair](#) (04B, Consumables - Products).

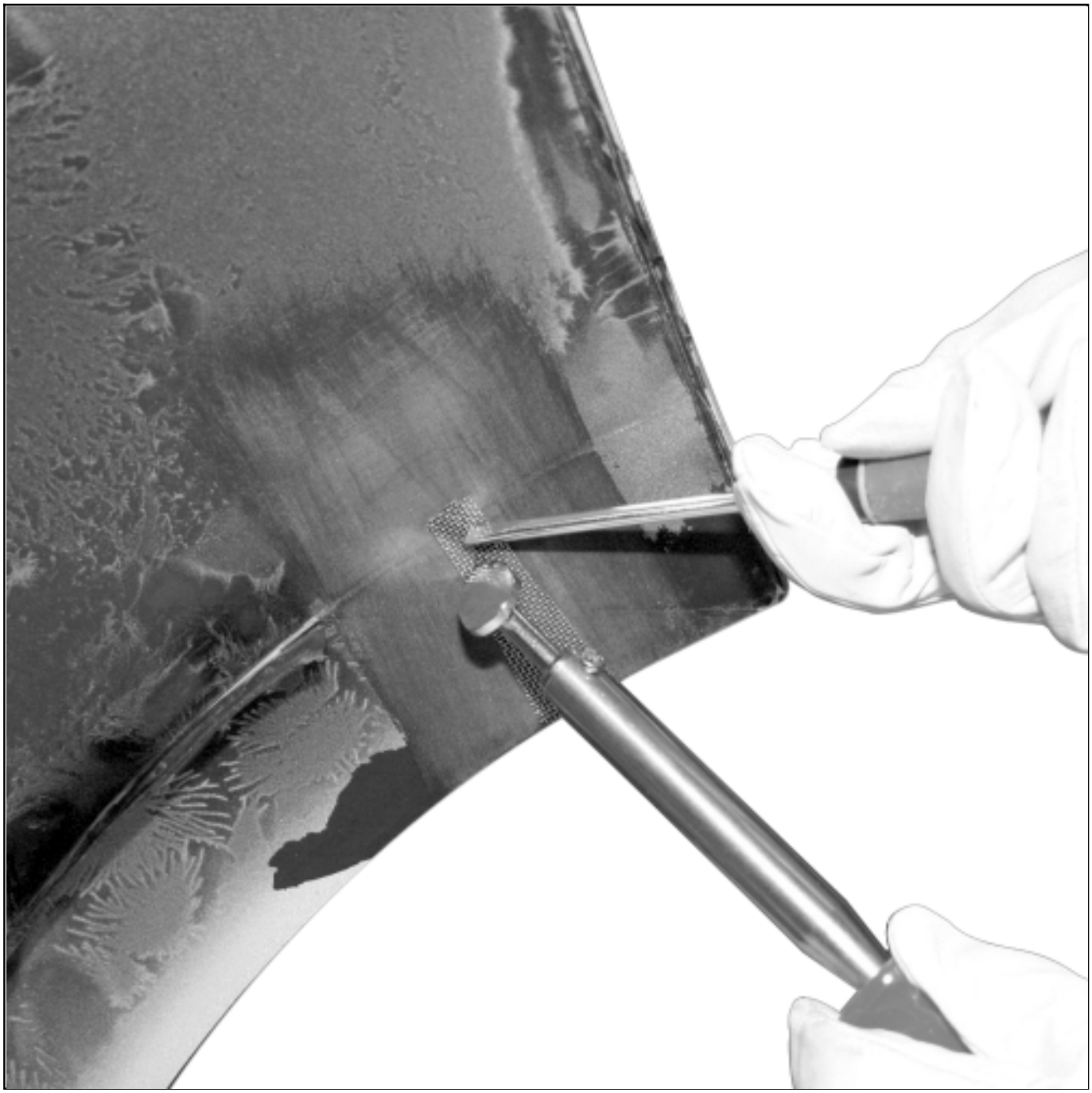

Position the stainless steel mesh and hold it using a dedicated tool.

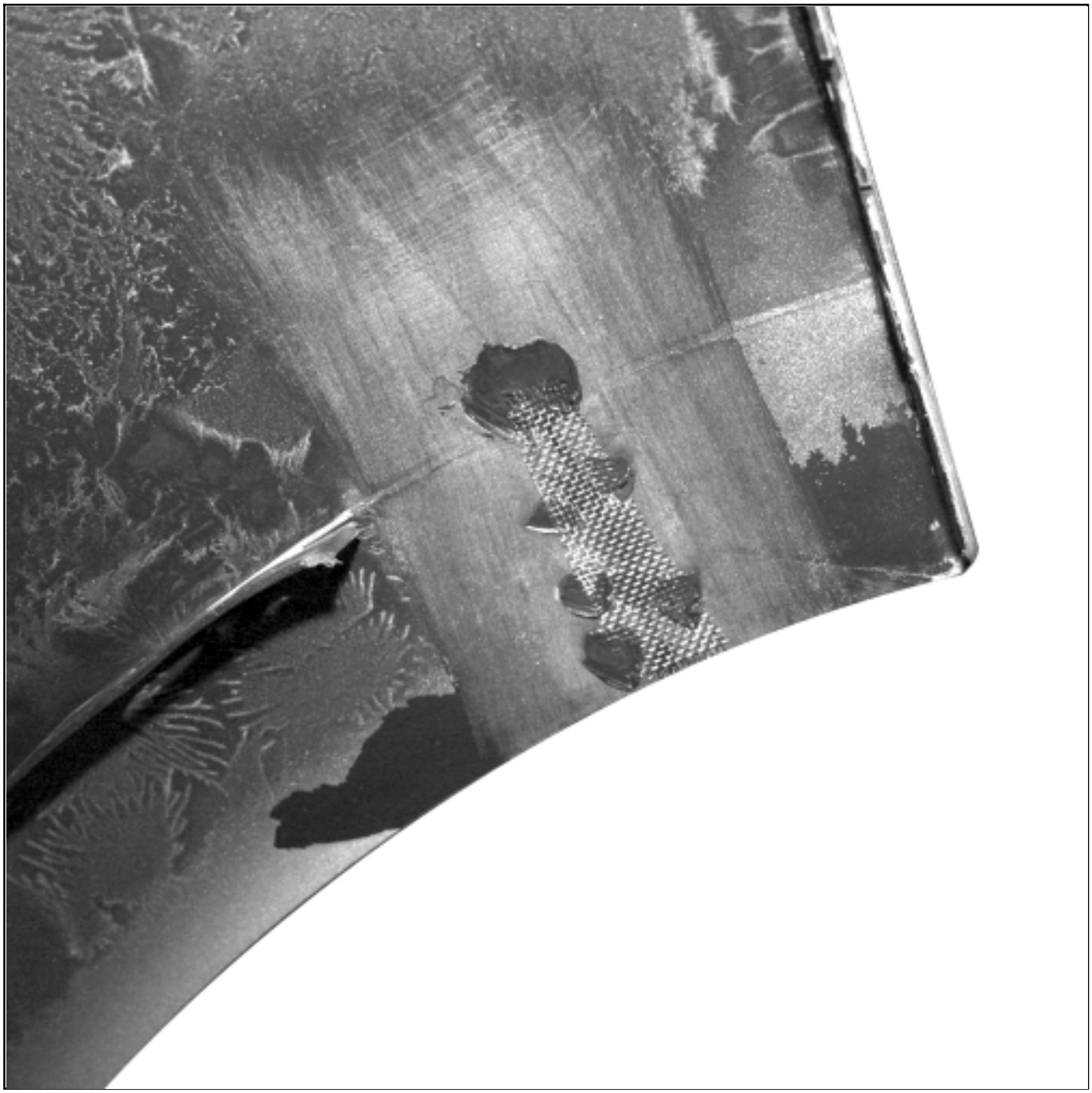

- Spot-weld the stainless steel mesh.

- Cool each spot weld, for two seconds, vigorously with the cooler[Vehicle: Parts and consumables for the repair](04B, Consumables - Products).

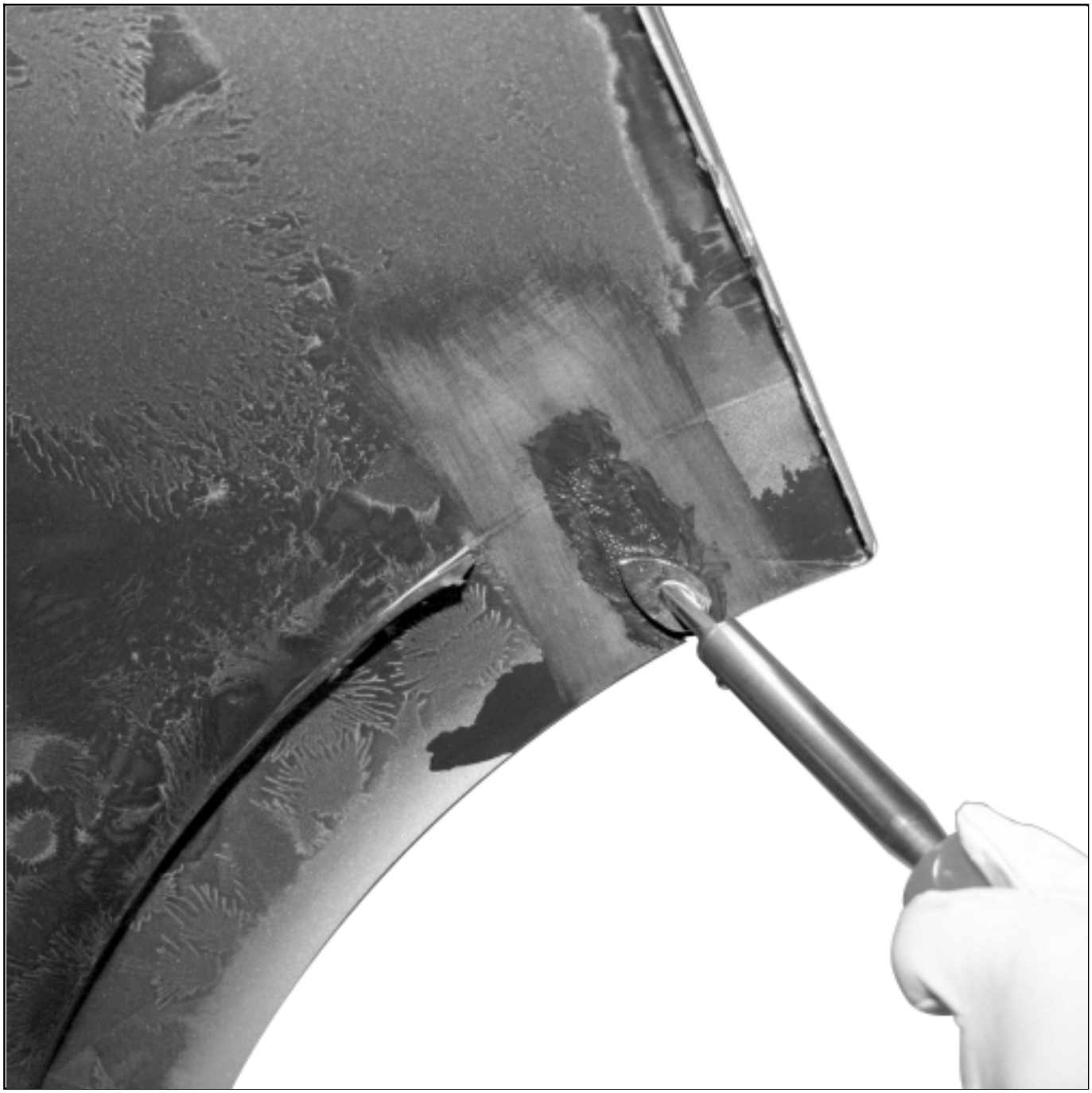

- Enclose the stainless steel mesh in the plastic material along the length of the crack.

- Cool the whole of the repaired area for two seconds, vigorously with the cooler[Vehicle: Parts and consumables for the repair](#) (04B, Consumables - Products).

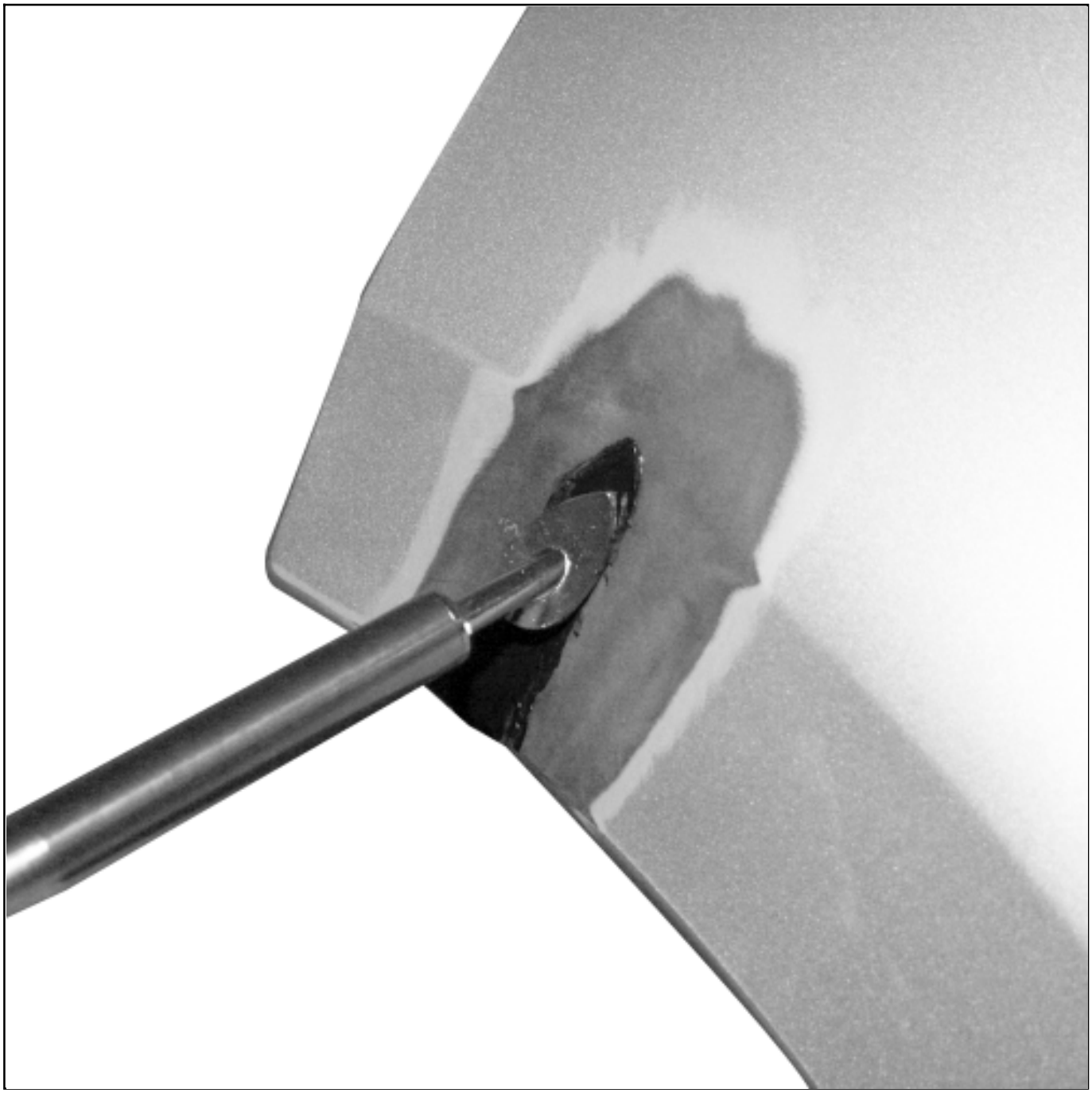

- Weld the exterior part of the bumper.

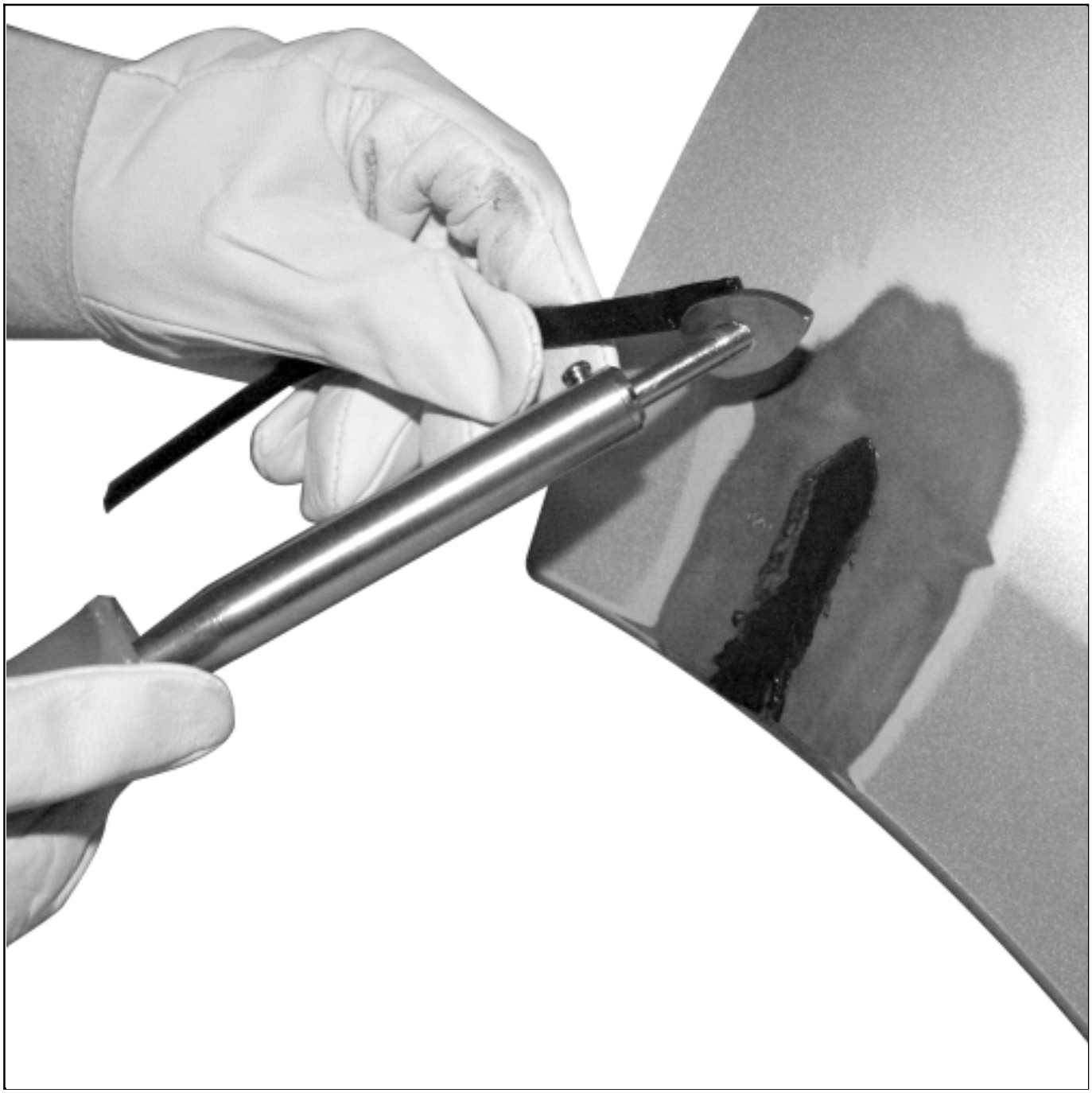

Add material by preheating the welding rod with the tip of the soldering iron (except for ABS, ASA and Polycarbonate type materials).

Note:

For ABS, ASA and Polycarbonate, fill the crack with the surrounding material

Cool the whole of the repaired area for two seconds, vigorously with the cooler Vehicle: Parts and consumables for the repair (04B, Consumables - Products).

Surface with a P 80 to P 150 then finish with a P 240.

Blow the component and clean the area to be repaired with a LINT-FREE CLOTH soaked in ANTISTATIC THINNER Vehicle: Parts and consumables for the repair (04B, Consumables - Products).

Wipe the area with a clean, dry LINT-FREE CLOTH Vehicle: Parts and consumables for the repair (04B, Consumables - Products).

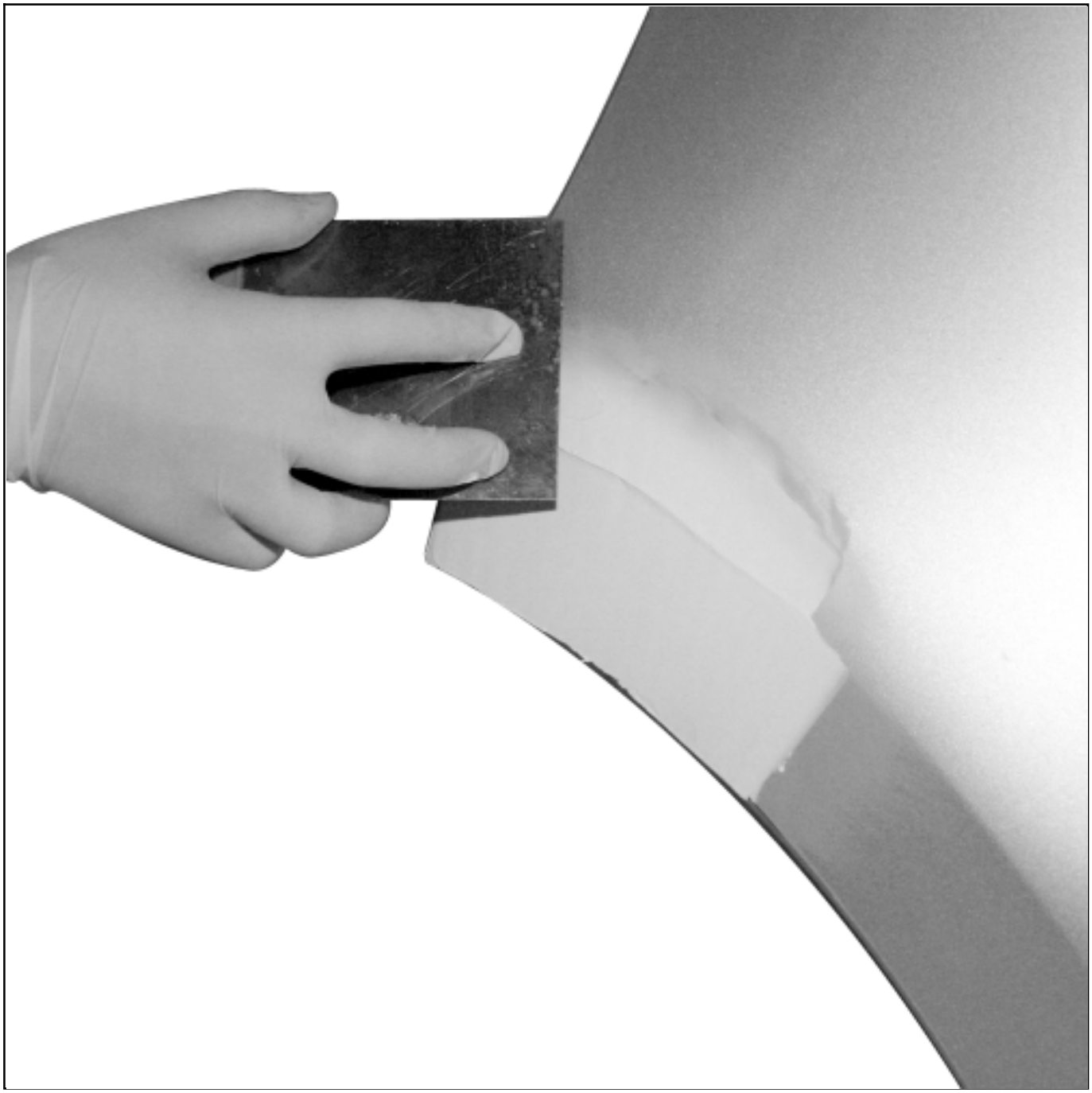

❑

If necessary, apply a finishing mastic (see product technical sheet) Vehicle: Parts and consumables for the repair (04B, Consumables - Products).

❑

Sand the finishing mastic with a P 150 then finish with a P 240.

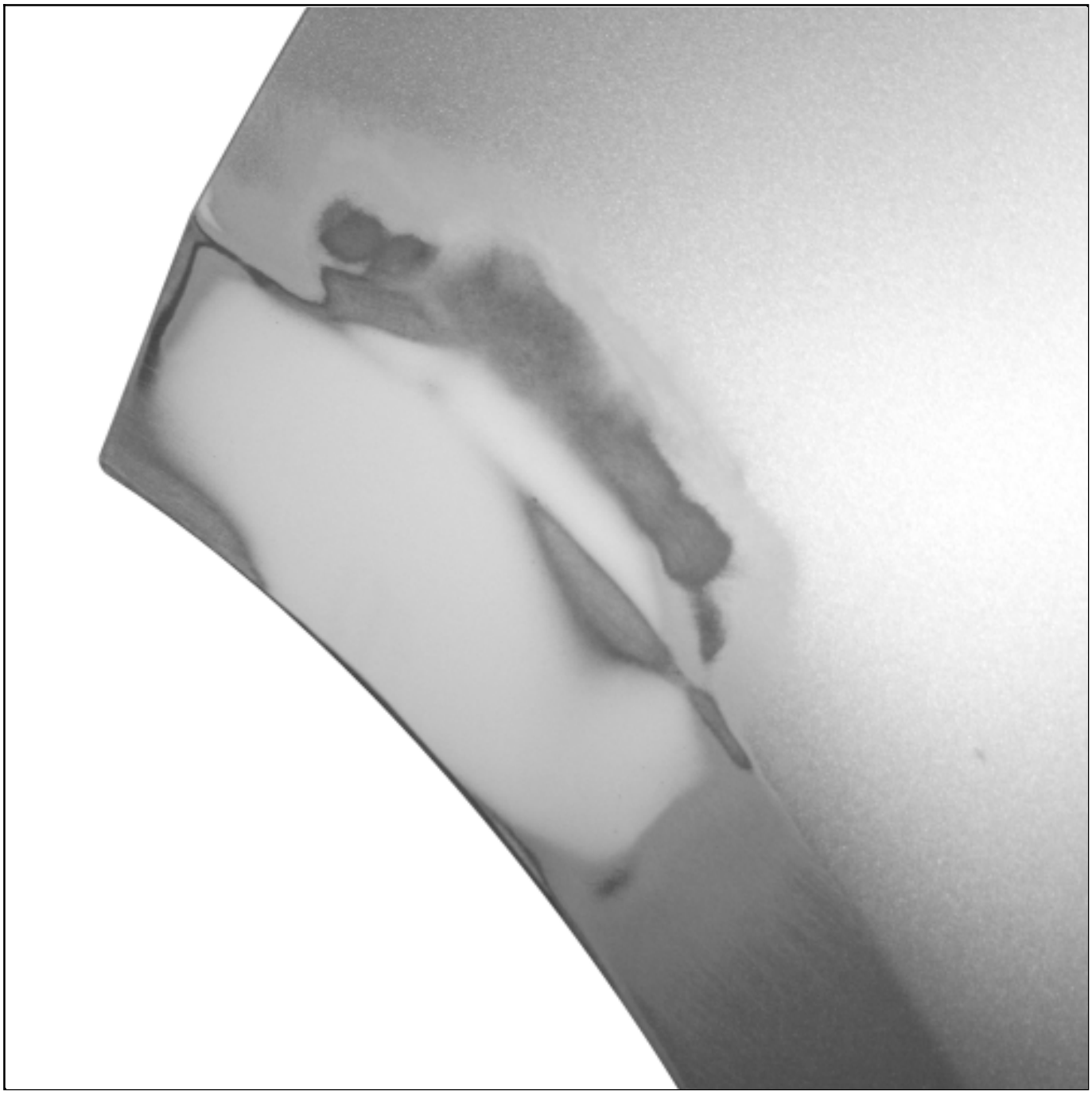

Follow the paint application procedure according to the material concerned:

- **Polypropylene / polyethylene bodywork component: Preparation and paint range** (Technical Note 592A, 95A, Paint application procedure on plastic),
- **ABS bodywork component: Preparation and paint range** (Technical Note 592A, 95A, Paint application procedure on plastic).

Note:

Method apply only on RTM component.

- Open the crack to let a hole of 10 mmwide.

- Chamfering between 30to 40 mmaround the crack using the orbital sander with a P80.

- Sand the paint around the zone to be repaired using the orbital sander with a P 150

- Blow the component and clean the area to be repaired with the Acetone(see product techincal sheet).

- Align the borders of the component using a plate pad(local manufactured)and fix them with plate screws.

- Cut 2 strips of materialwith repair length, first of 50mmwide and second of 100 mmwide.

- Blow the component and clean the area to be repaired with the Acetone(see product techincal sheet).

- Prepare the Epoxy resin(see 50A, General information, Products for plastic material bodywork components: Description) .

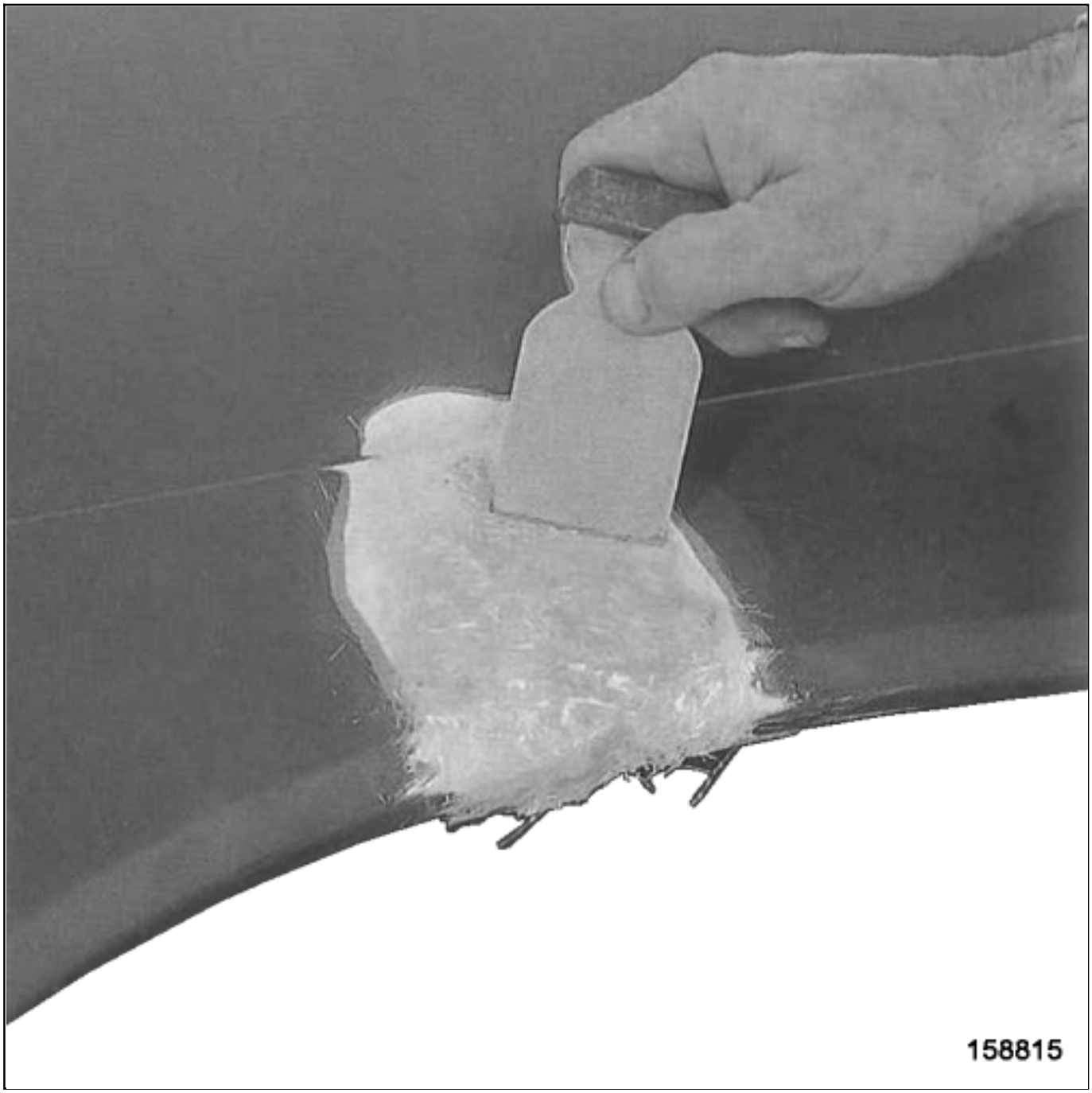

Fit the strip of materiel.

- Soaked the component interior with Epoxy resin.

> Note:
>
> After 15 minutes,accelerate the hardening in drying oven or in infrared drying device(60° C maxi at a distance of 70 cm).

- Remove the plate pads.

- Cut a stripcovering the chamfer.

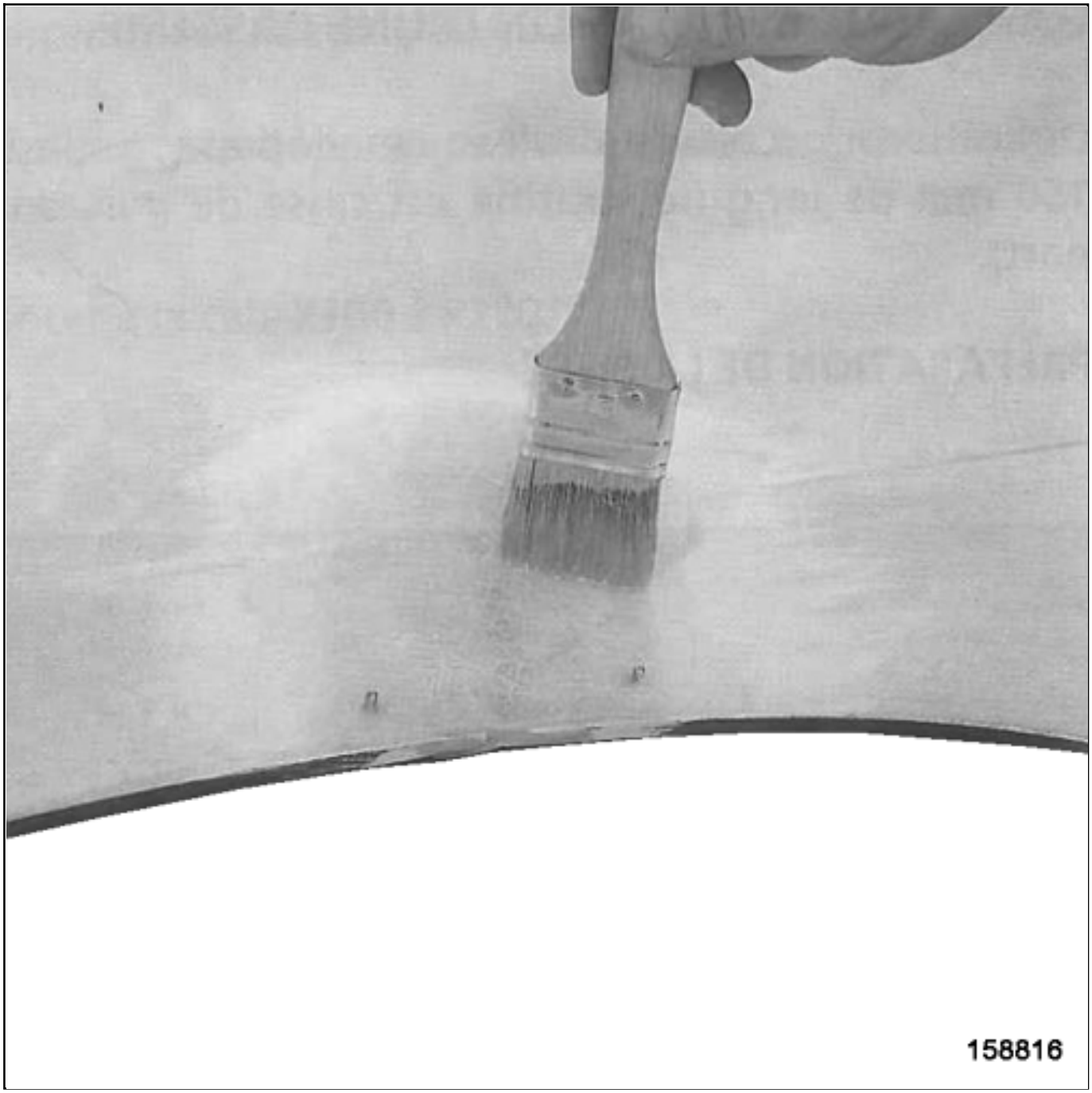

- Chamfering the screws holes.

- Fit the strip soaking with resin.

Note:

Pay particular attention at output screw area and at strips junction reinforcement to prevent the air bubbles form.

- Add short fibres with resin(50 % maxi.).

- Apply the mixture using a spatula.

Note:

After 15 minutes,accelerate the hardening in drying oven or in infrared drying device(60° C maxi at a distance of 70 cm).

- Sand using the orbital sander with a P 80then with a P180and P240.

- Apply if necessary a finishing mastic(see product technical sheet). (see **Vehicle: Parts and consumables for the repair**)

- Sand the finishing masticusing a P 150then finish using a P240.

4. PROCEDURE 3

- Repairing a hole on a plastic chassis element.

1- BONDING METHOD

Note:

Before any repairs, check the reparability of components made from plastic materials.

(see 50A, General information, Products for plastic material bodywork components: Description) .

(see 50A, General information, Plastic material bodywork component: Precautions for the repair) .

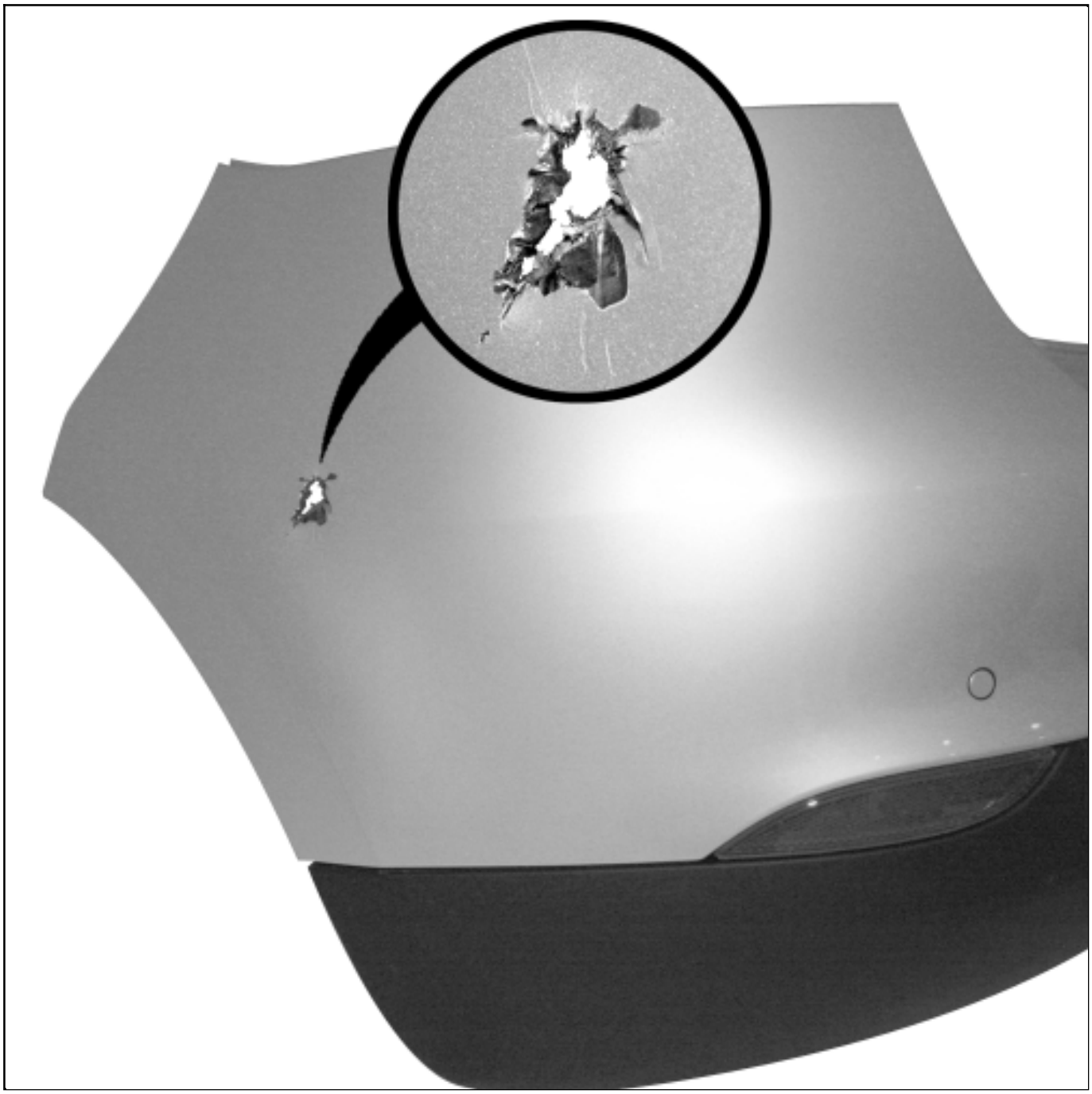

Wash the component in soapy water and rinse in clean water.

❑

Clean the area to be repaired with a LINT-FREE CLOTHsoaked in ANTISTATIC THINNERVehicle: Parts and consumables for the repair (04B, Consumables - Products).

❑

Wipe the area with a clean, dry LINT-FREE CLOTHVehicle: Parts and consumables for the repair (04B, Consumables - Products).

❑

Chamfer on the exterior side using an angle grinderor a belt sanderequipped with a P 120abrasive pad.

- Surface the interior and exterior areas with the orbital sander using a P 150.

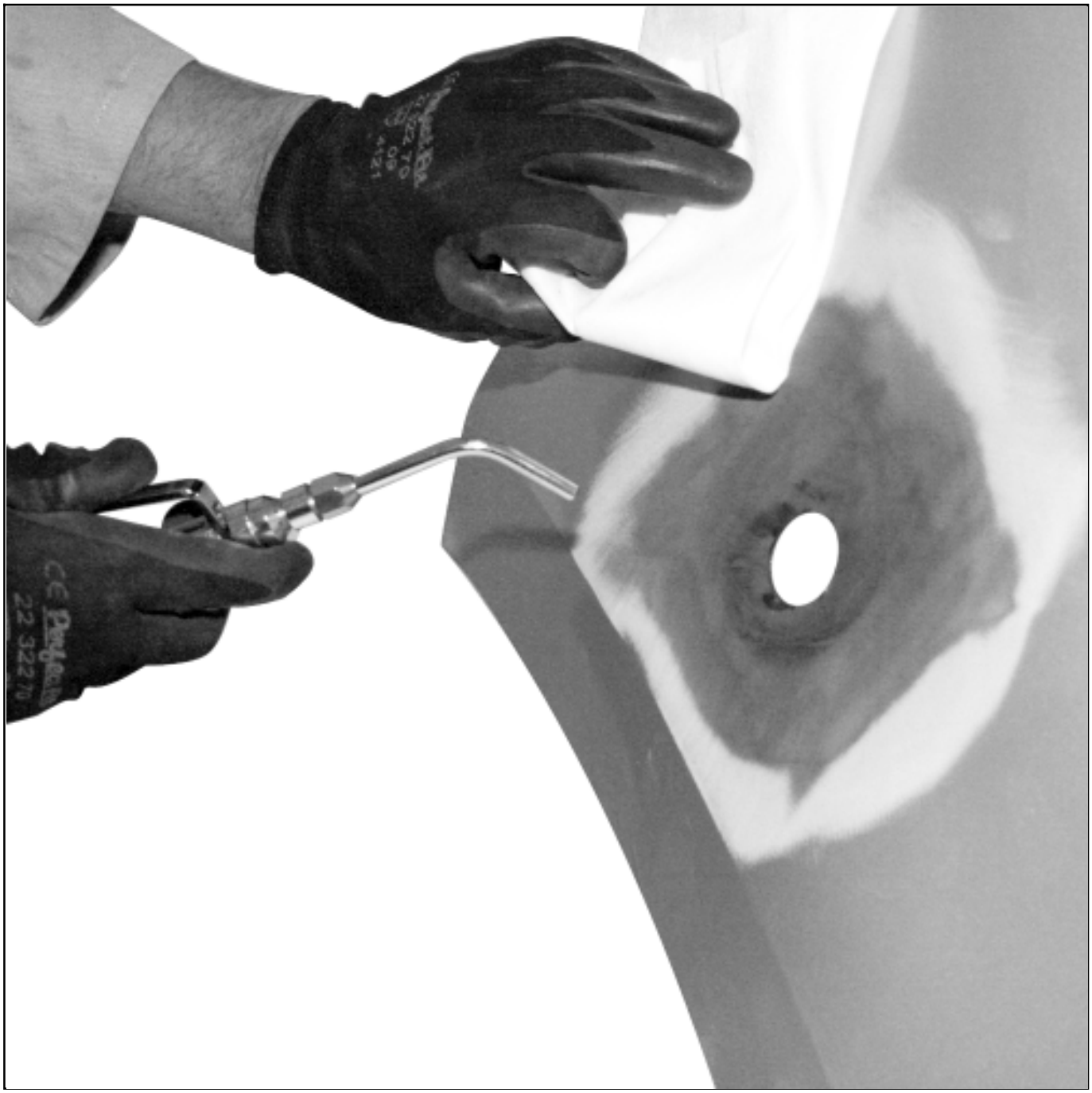

- Blow the component and clean the area to be repaired with the cleaner included in the plastic repair kit box.

- Apply the adhesive primer included in the plastic repair kit to the interior and exterior areas.

- Leave the adhesive primer to dry (see product technical sheet).

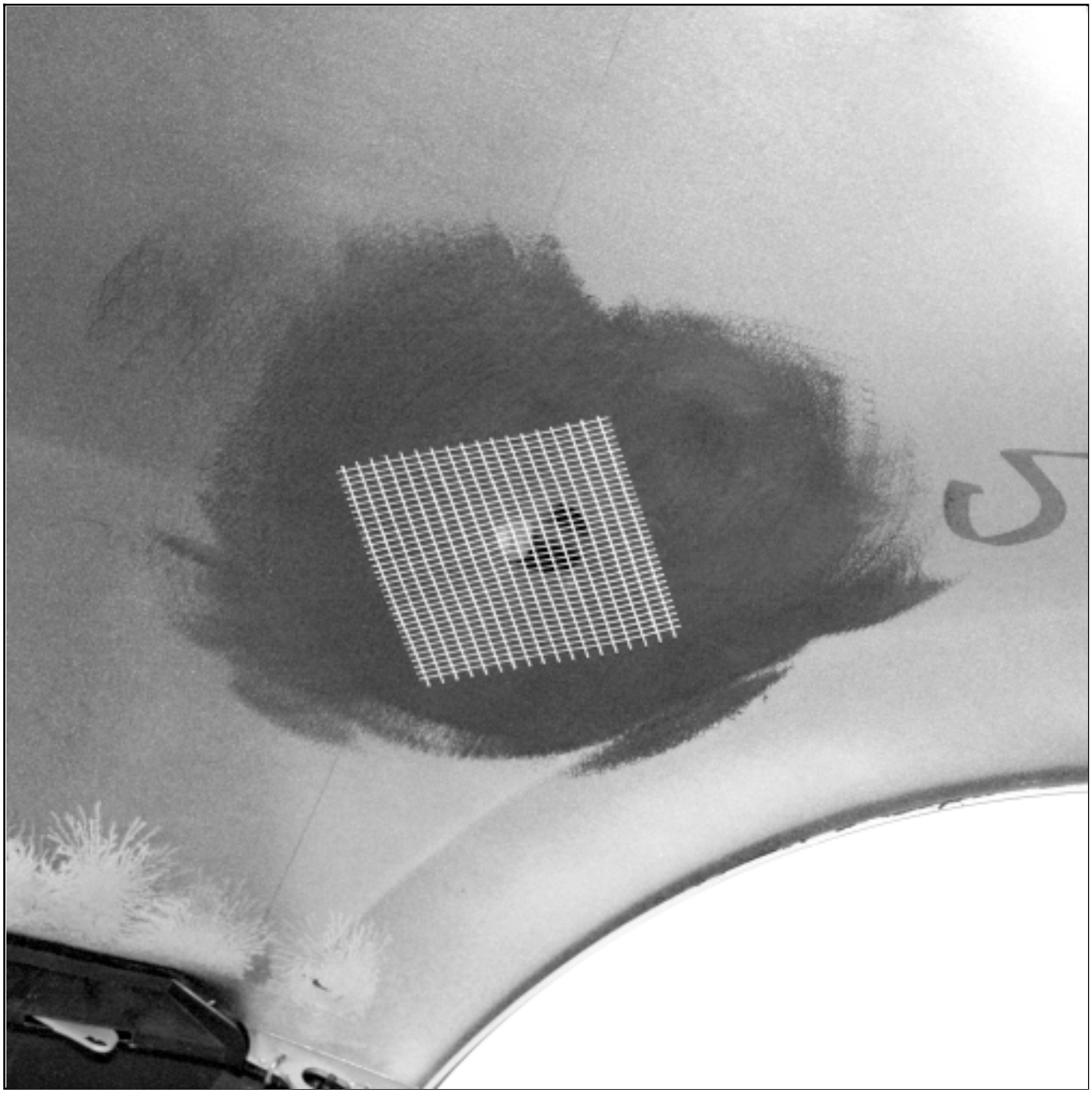

- Adjust a piece of reinforcing film (cloth)suitable for repairing the inside of the component.

- Prepare the bi-component repair mastic(see 50A, General information, Products for plastic material bodywork components: Description) .

- Extrude a narrow bead around the areas to be repaired on the inside of the component and apply reinforcing film (cloth).

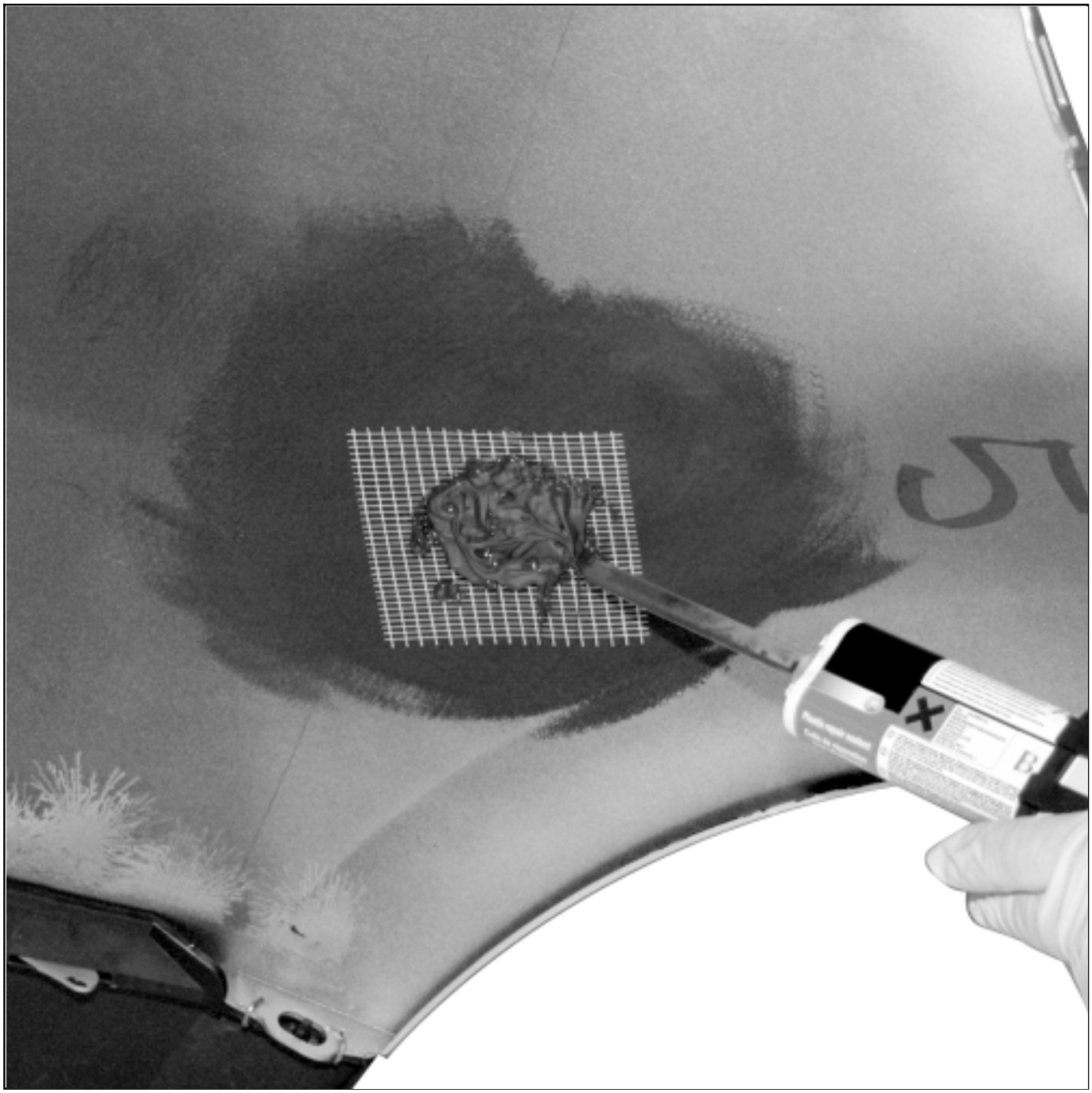

- Extrude a thick bead on the reinforcing film (cloth)at the hole.

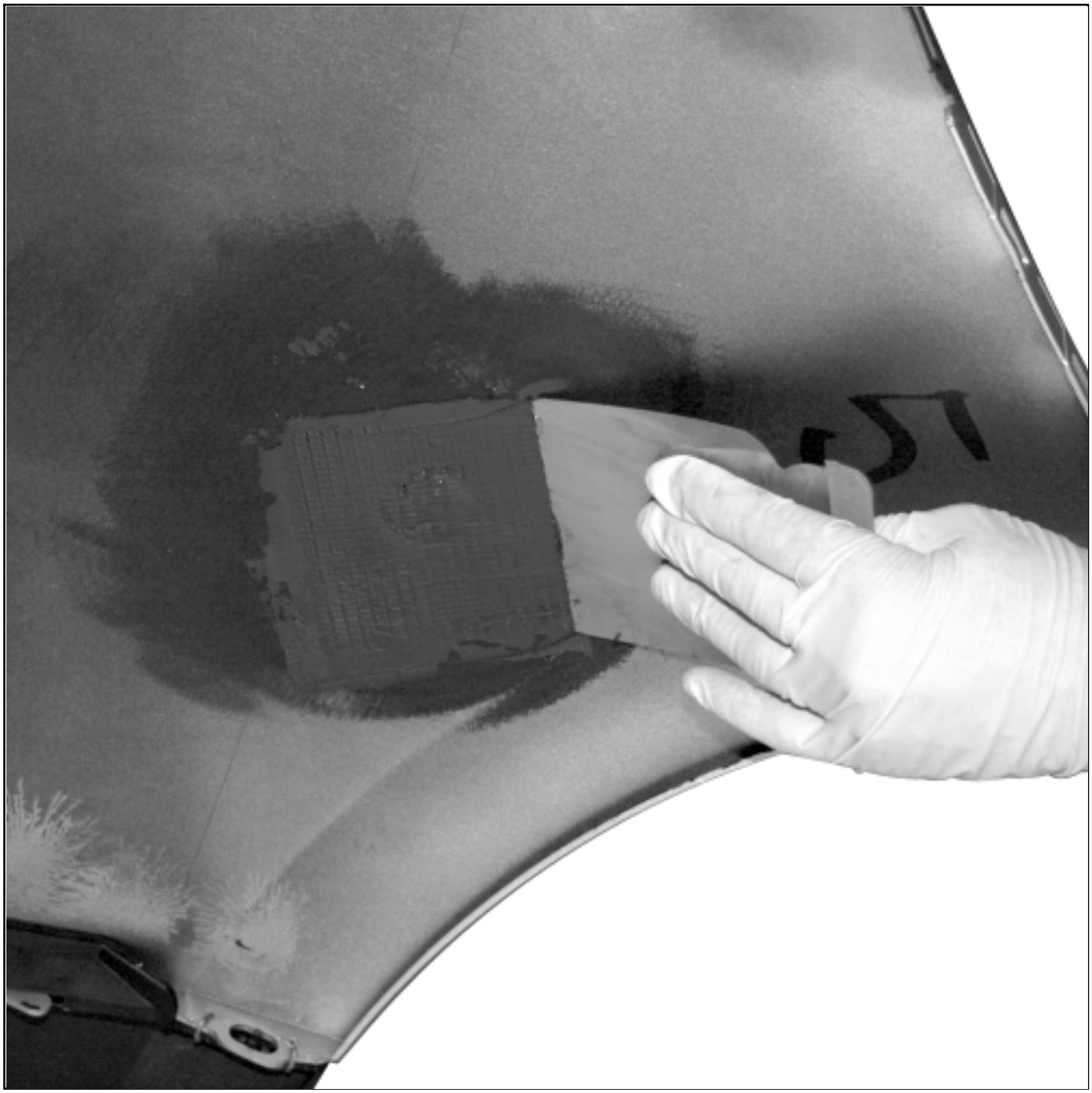

Smooth using a spatula.

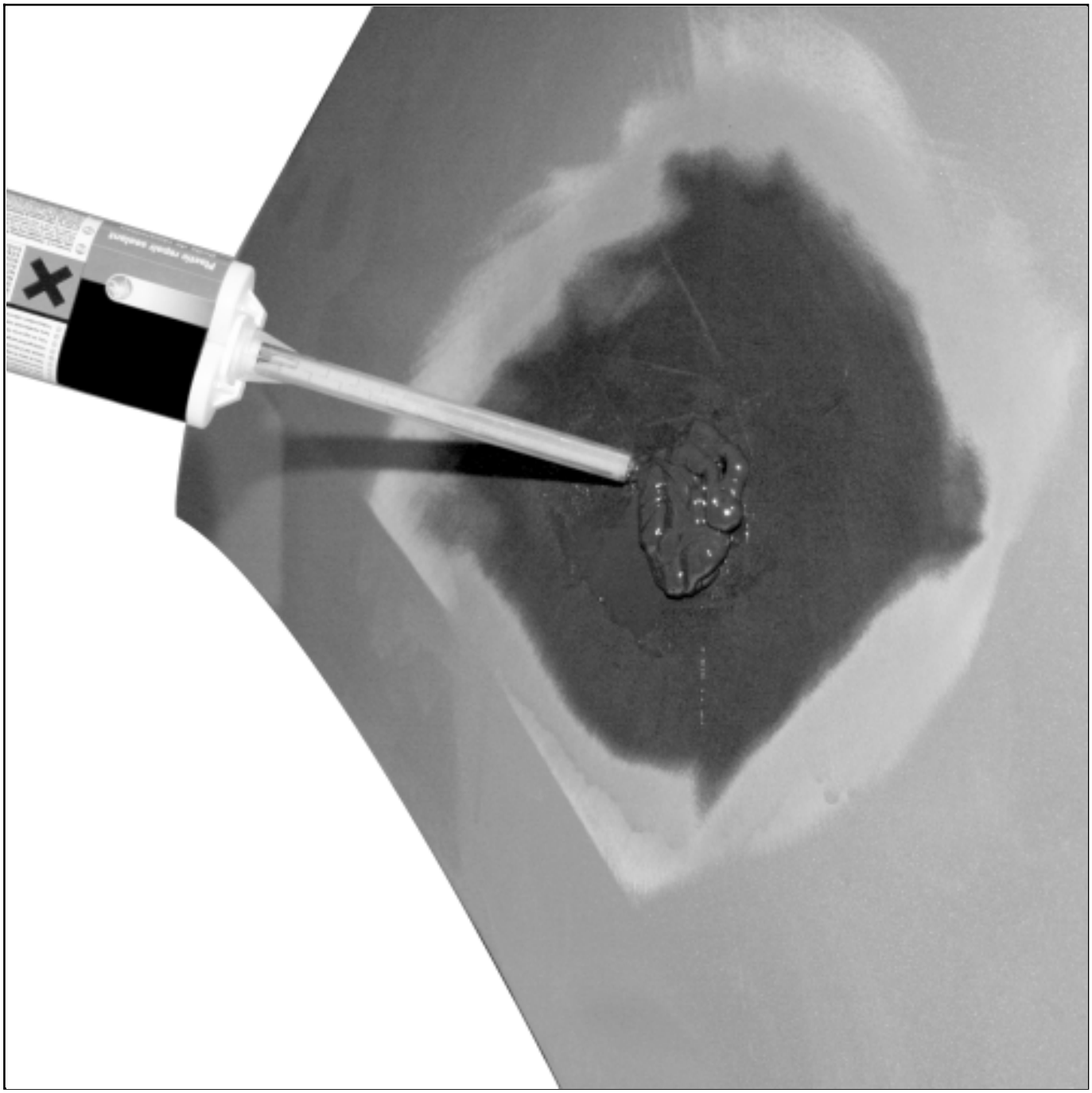

- Extrude a thick bead on the reinforcing film (cloth)at the hole on the exterior.

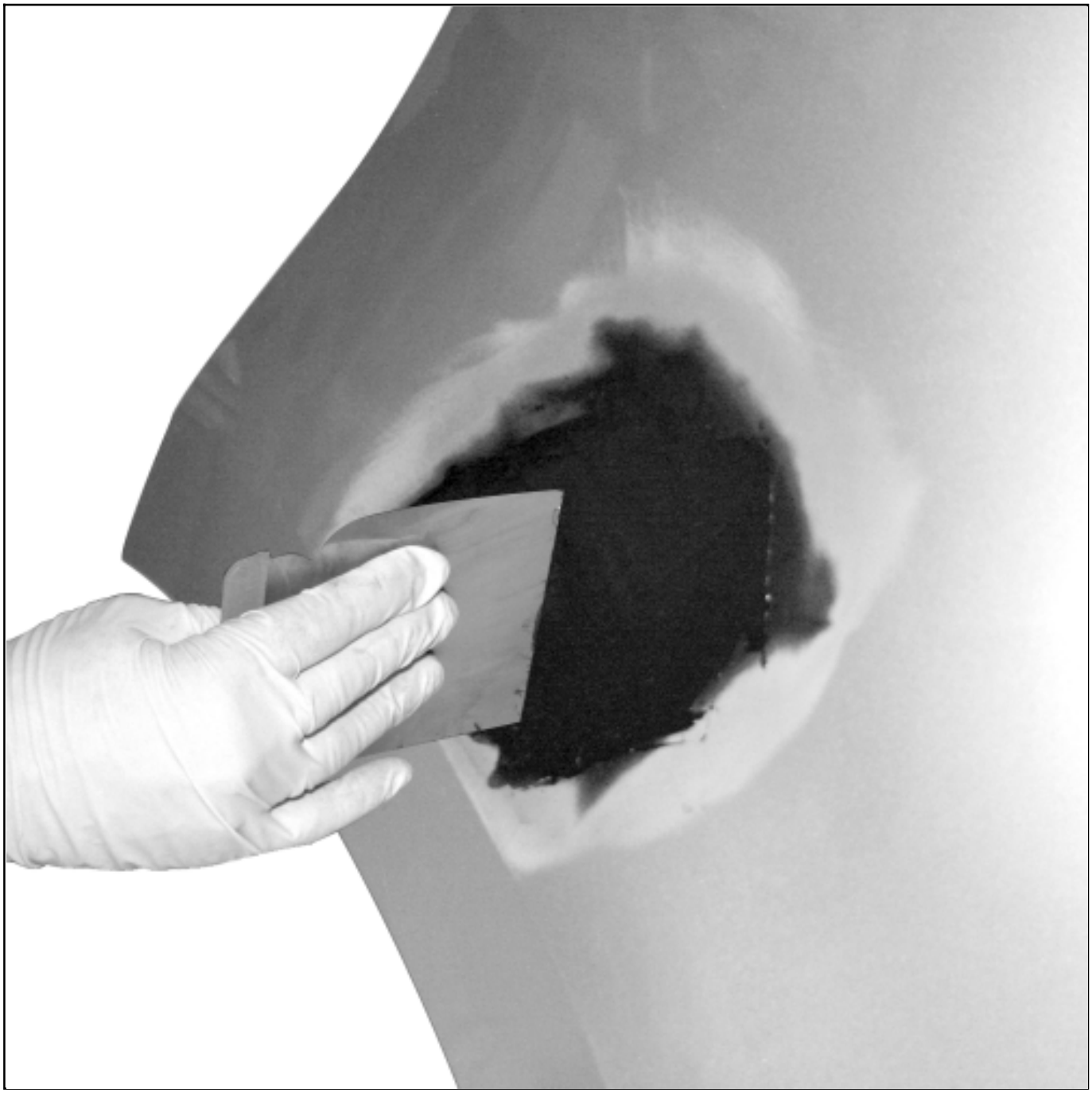

- Smooth using a spatula.

- Leave the bi-component repair mastic to dry (see product technical sheet).

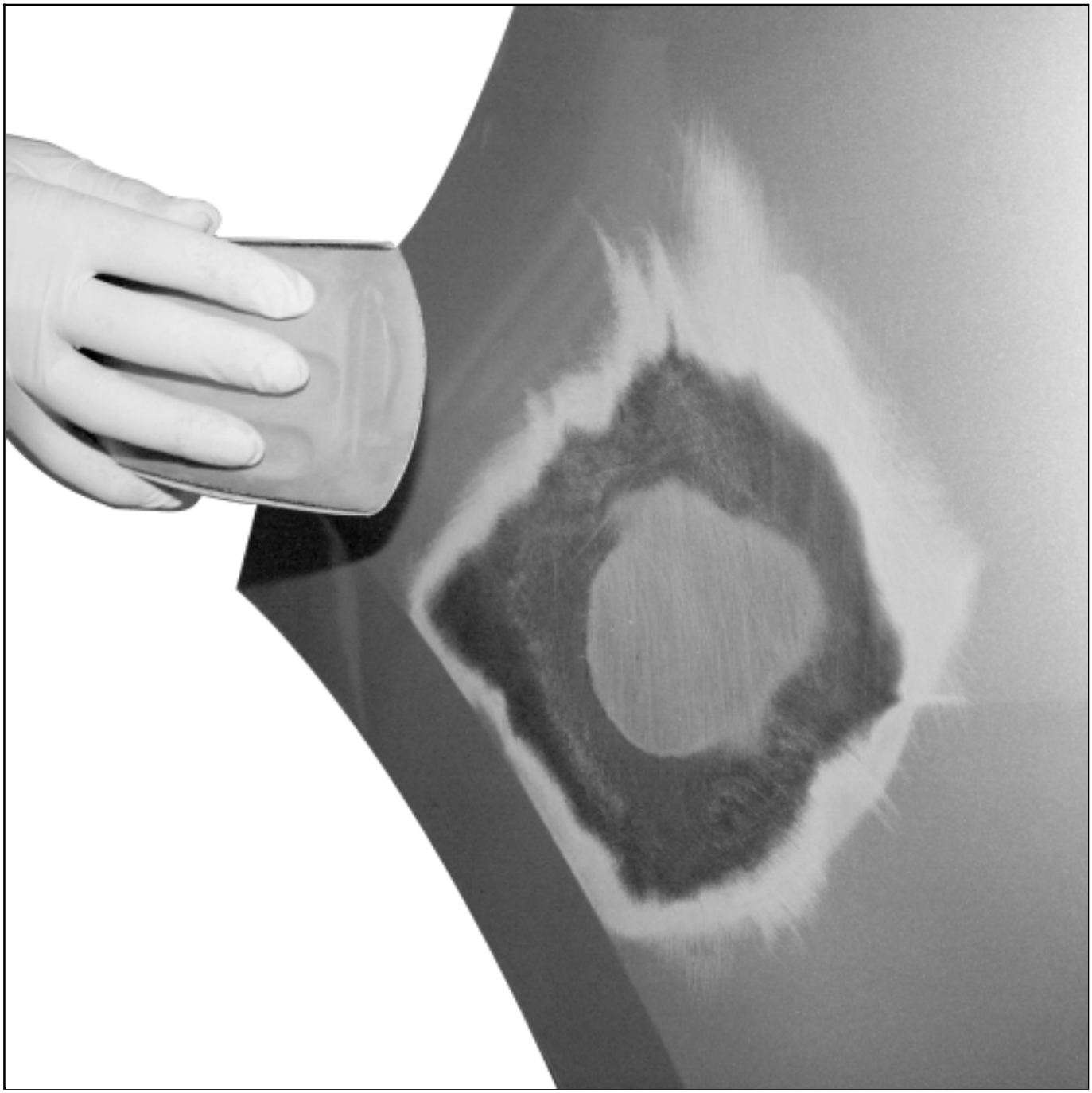

- Surface on the exterior side with a P 150then finish with a P 240.

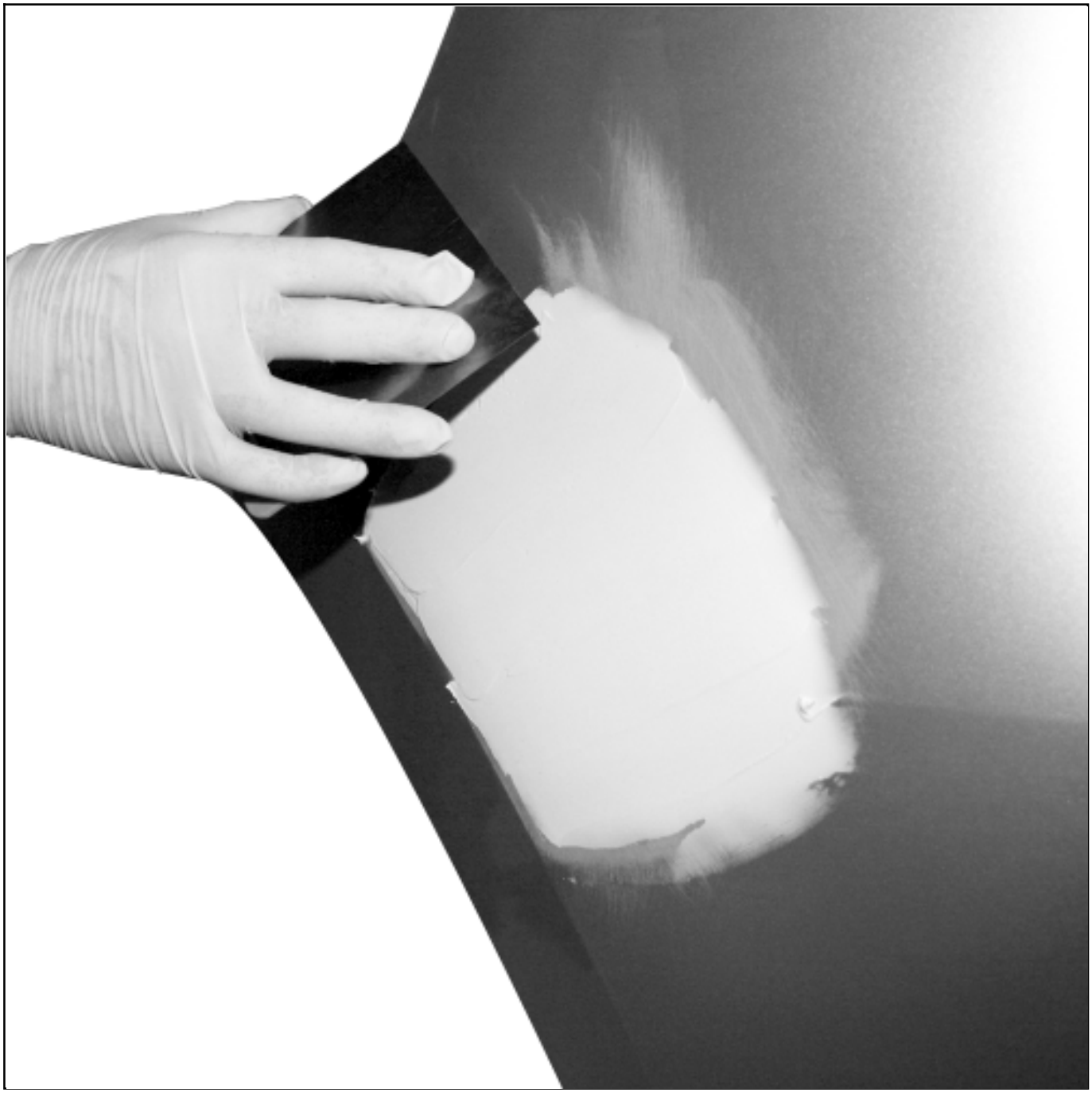

If necessary, apply a finishing mastic(see product technical sheet) **Vehicle: Parts and consumables for the repair** (04B, Consumables - Products).

Sand the finishing masticwith a P 150then finish with a P 240.

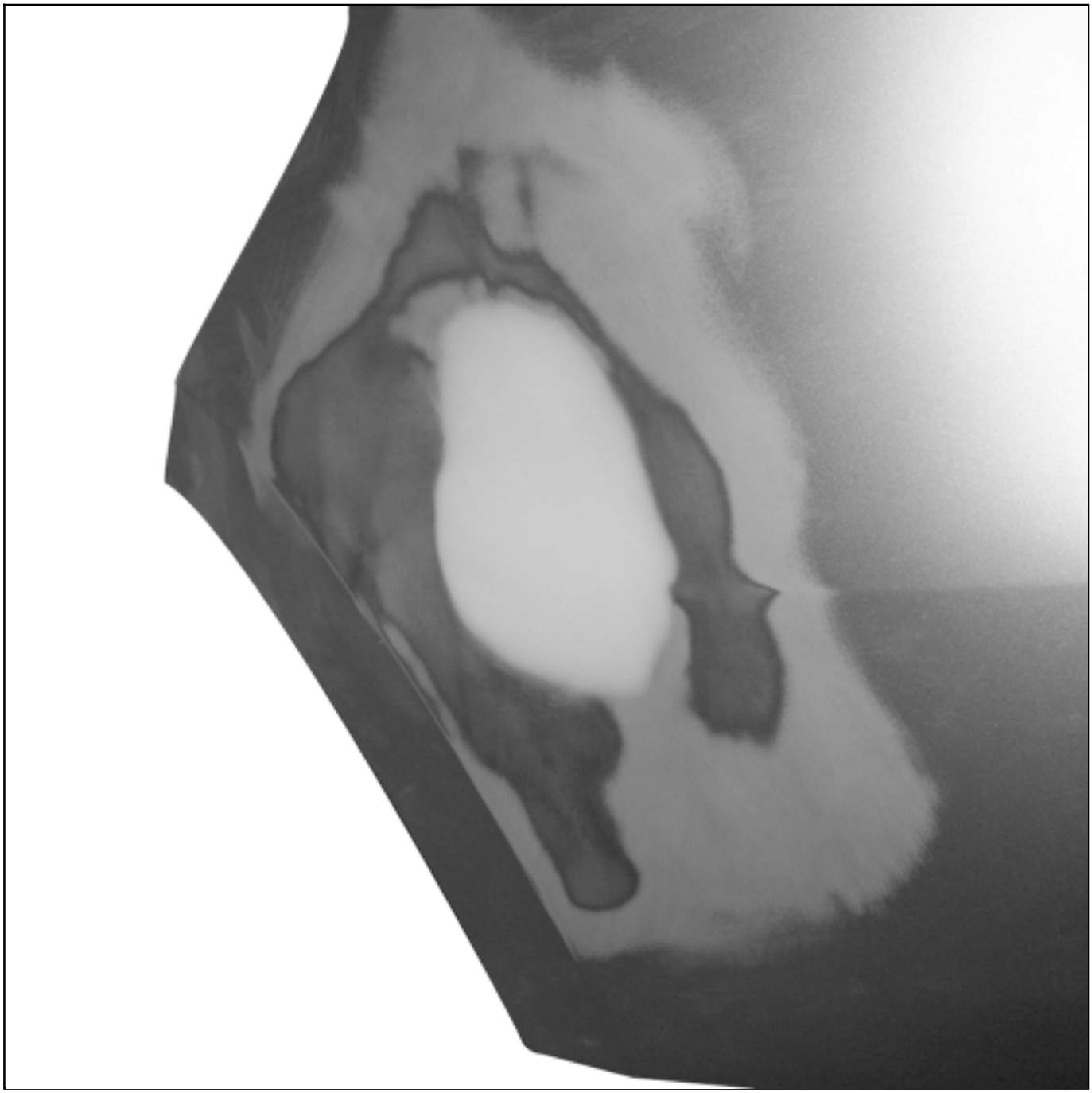

Follow the paint application procedure according to the material concerned:

- **SMC bodywork component: Preparation and paint range** (Technical Note 592A, 95A, Paint application procedure on plastic),
- **Polypropylene / polyethylene bodywork component: Preparation and paint range** (Technical Note 592A, 95A, Paint application procedure on plastic),
- **ABS bodywork component: Preparation and paint range** (Technical Note 592A, 95A, Paint application procedure on plastic),

■

Noryl bodywork component: Preparation and paint range (Technical Note 592A, 95A, Paint application procedure on plastic).

2- WELD METHOD

Note:

Before any repairs, check the reparability of components made from plastic materials.

(see 50A, General information, Products for plastic material bodywork components: Description) .

(see 50A, General information, Plastic material bodywork component: Precautions for the repair) .

Note:

This repair cannot be carried out on ABS, ASAand Polycarbonateplastics.

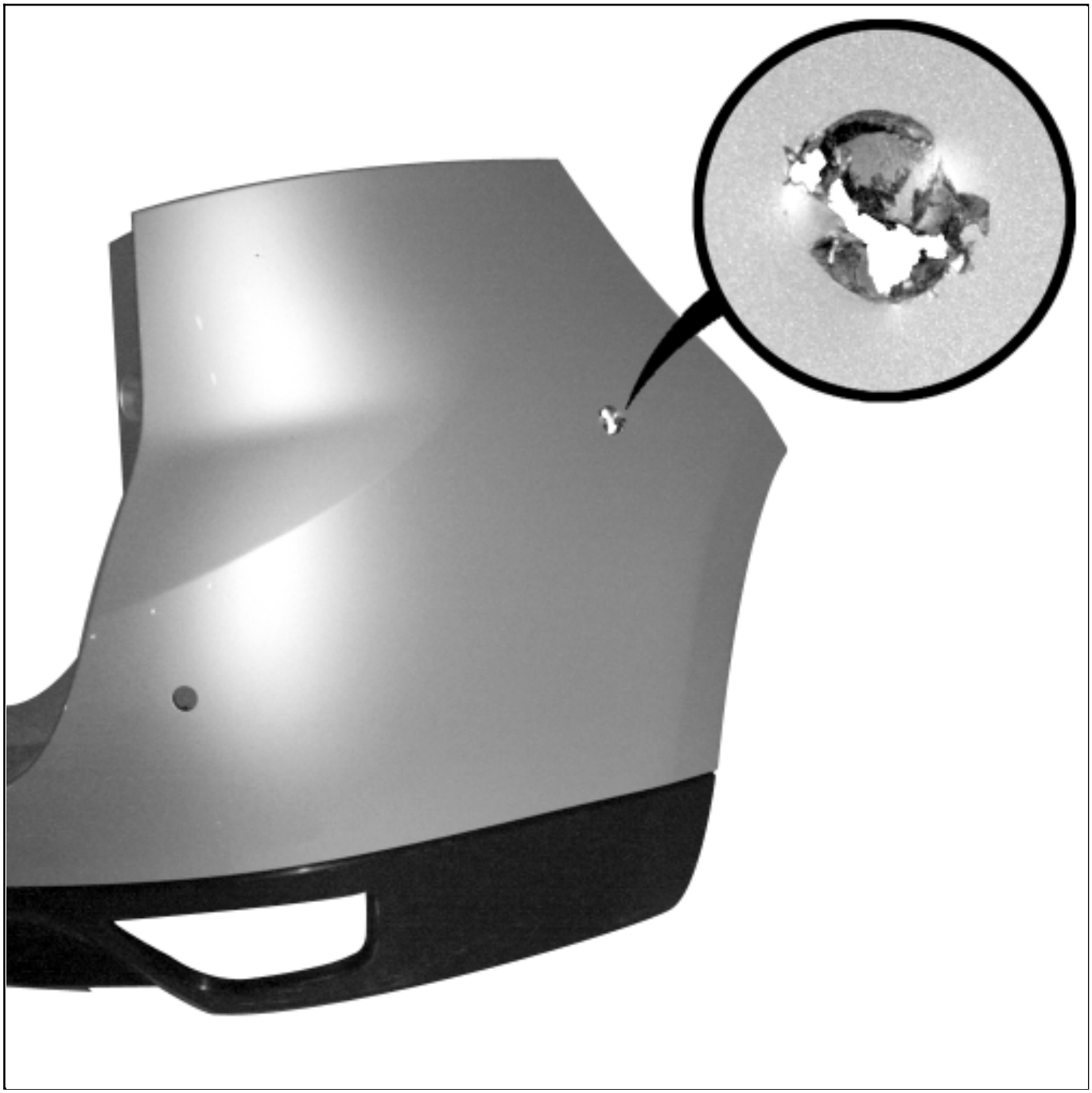

- Wash the component in soapy water and rinse in clean water.

- Clean the area to be repaired with a LINT-FREE CLOTHsoaked in ANTISTATIC THINNERVehicle: Parts and consumables for the repair (04B, Consumables - Products).

- Wipe the area with a clean, dry LINT-FREE CLOTHVehicle: Parts and consumables for the repair (04B, Consumables - Products).

- Strip the paint with a P 150 over a radius of 100 mm.

- Blow the component and clean the area to be repaired with a LINT-FREE CLOTHsoaked in ANTISTATIC THINNER Vehicle: Parts and consumables for the repair (04B, Consumables - Products).

- Wipe the area with a clean, dry LINT-FREE CLOTHVehicle: Parts and consumables for the repair (04B, Consumables - Products).

- Preheat the soldering iron.

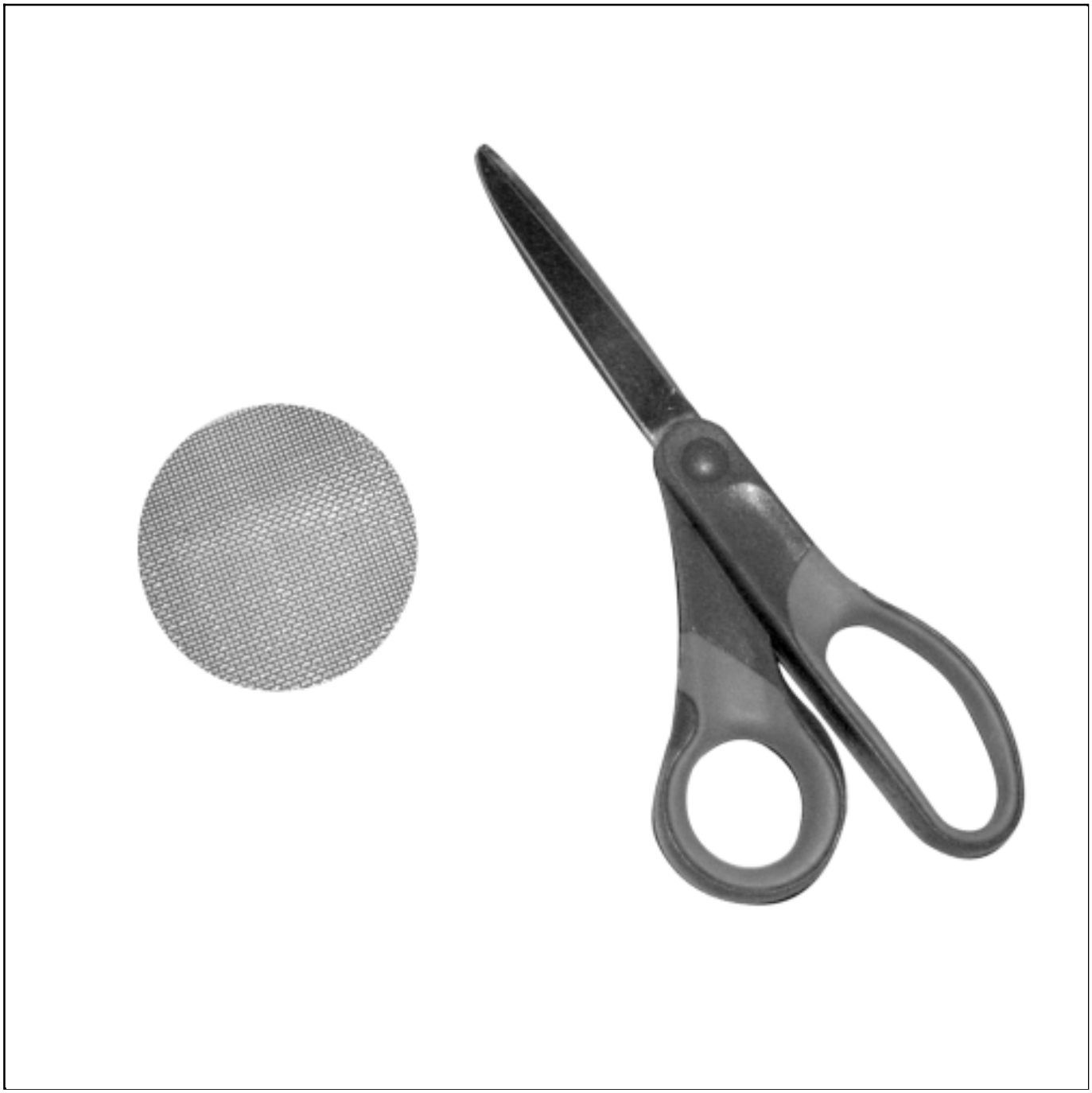

Cut the stainless steel mesh suitable for the repair.

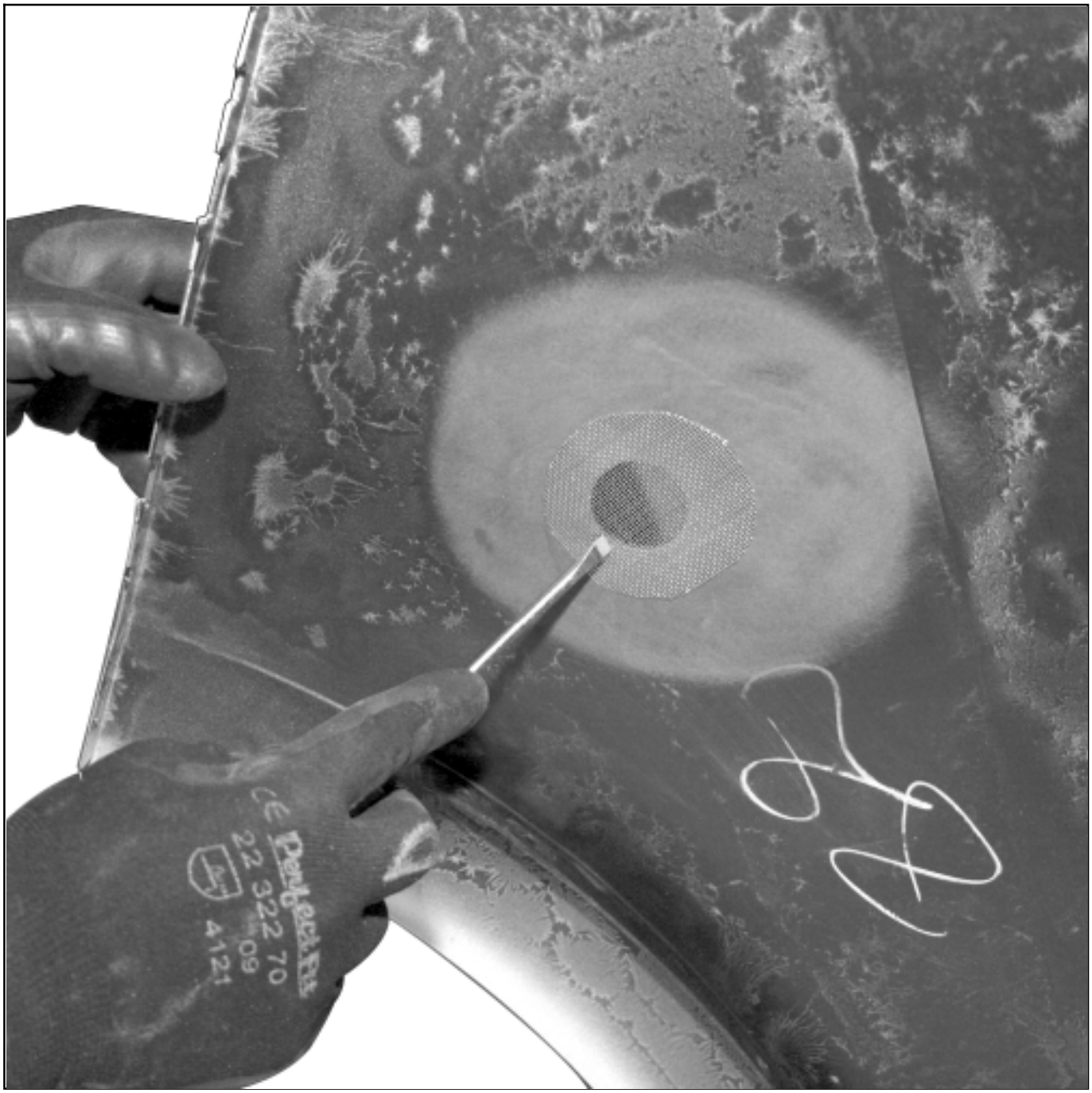

Adjust the stainless steel mesh and hold it using a dedicated tool.

Spot weld around the edge of the stainless steel mesh frame with the tip of the soldering iron.

Note:

For noryl:

Add material around the edge of the hole by preheating the welding rod with the tip of the soldering iron.

Enclose the stainless steel mesh in the additional material.

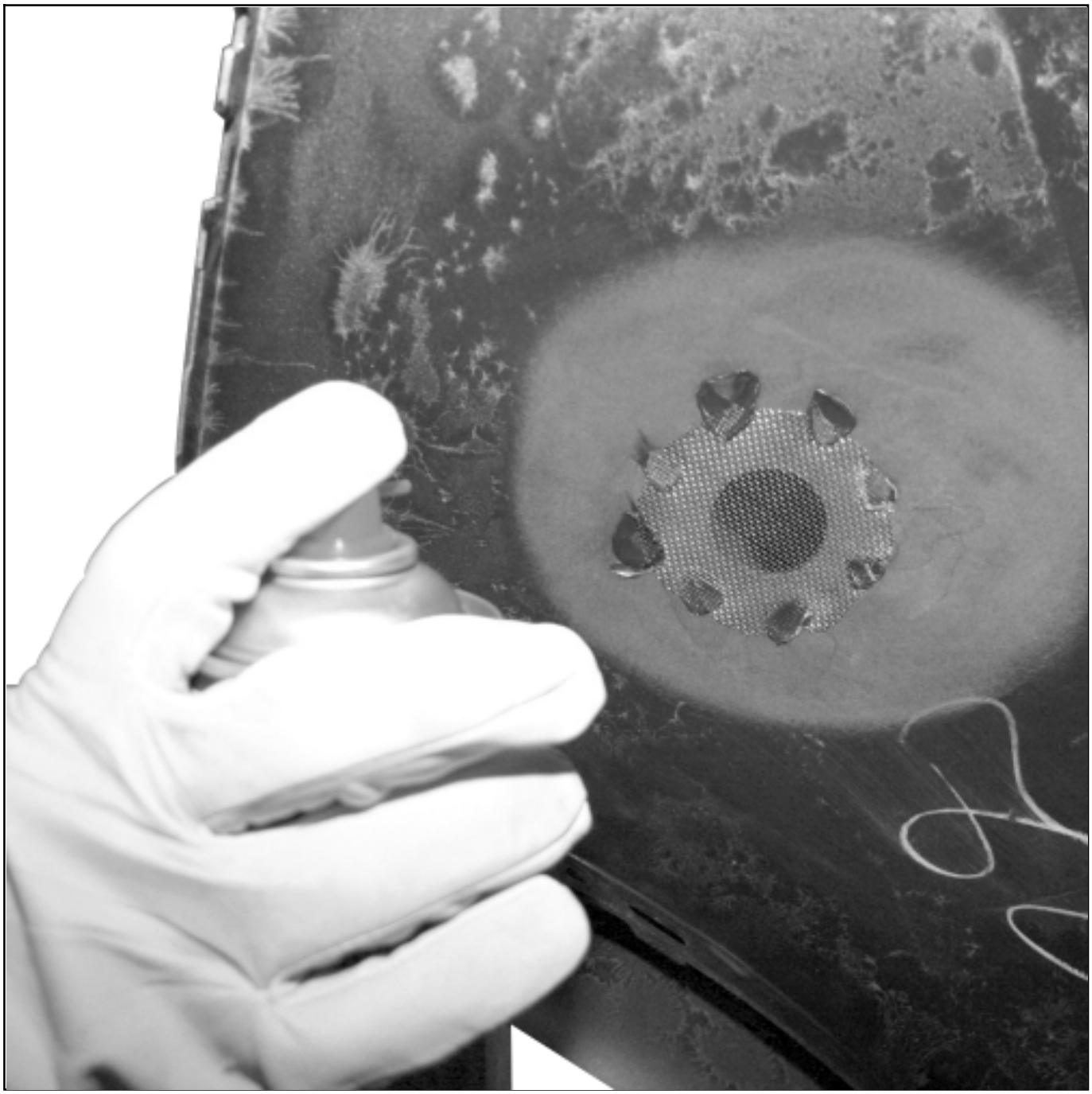

Cool each spot weld, for two seconds, vigorously with the cooler Vehicle: Parts and consumables for the repair (04B, Consumables - Products).

❑

Enclose the stainless steel frame in the plastic material.

❑

Cool the whole of the repaired area for two seconds, vigorously with the cooler Vehicle: Parts and consumables for the repair (04B, Consumables - Products).

- Add material by preheating the welding rod with the tip of the soldering iron.

- Cool the whole of the repaired area for two seconds, vigorously with the cooler**Vehicle: Parts and consumables for the repair** (04B, Consumables - Products).

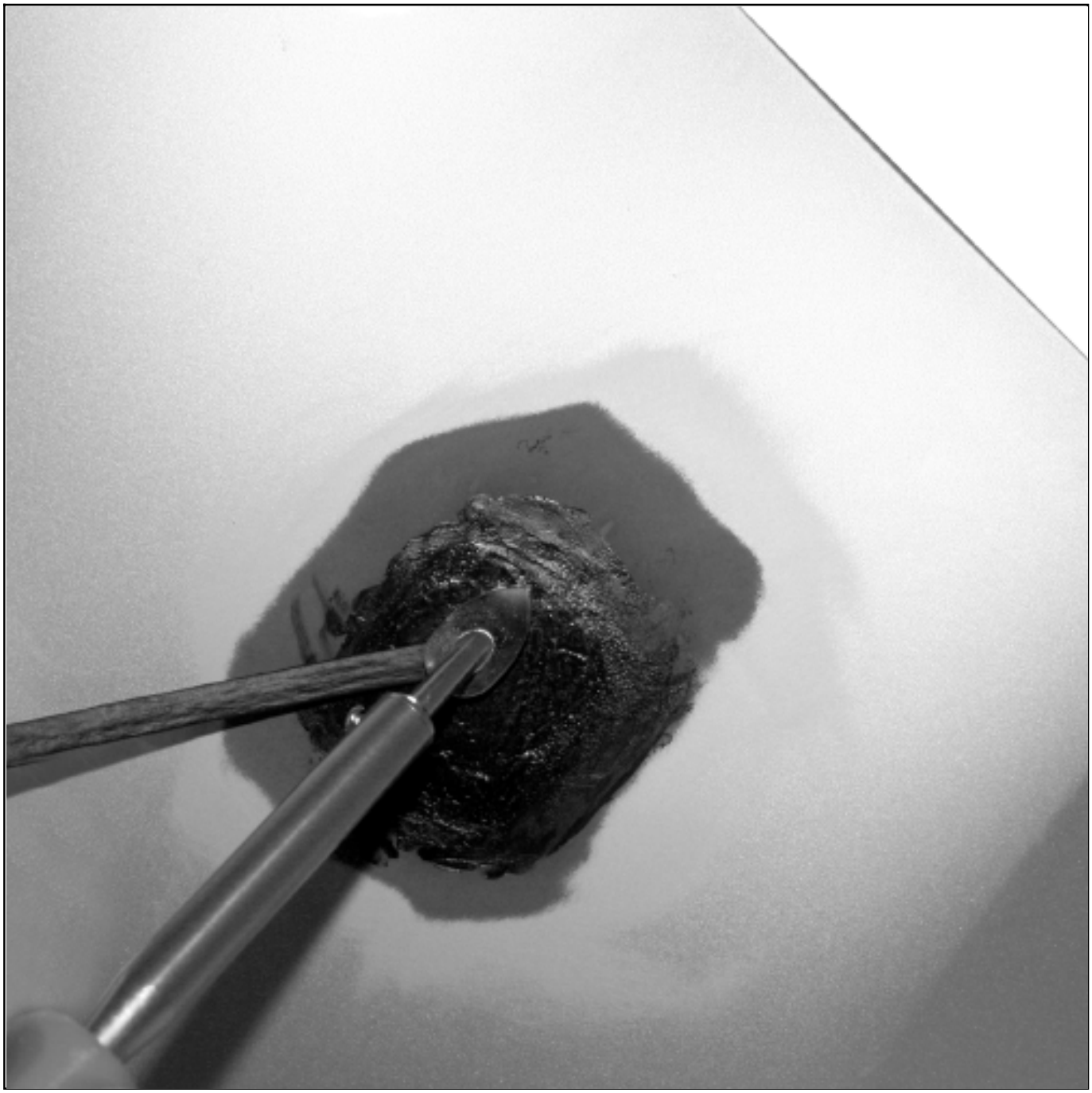

- Add material to the exterior by preheating the welding rod with the tip of the soldering iron.

- Cool the whole of the repaired area for two seconds, vigorously with the cooler Vehicle: Parts and consumables for the repair (04B, Consumables - Products).

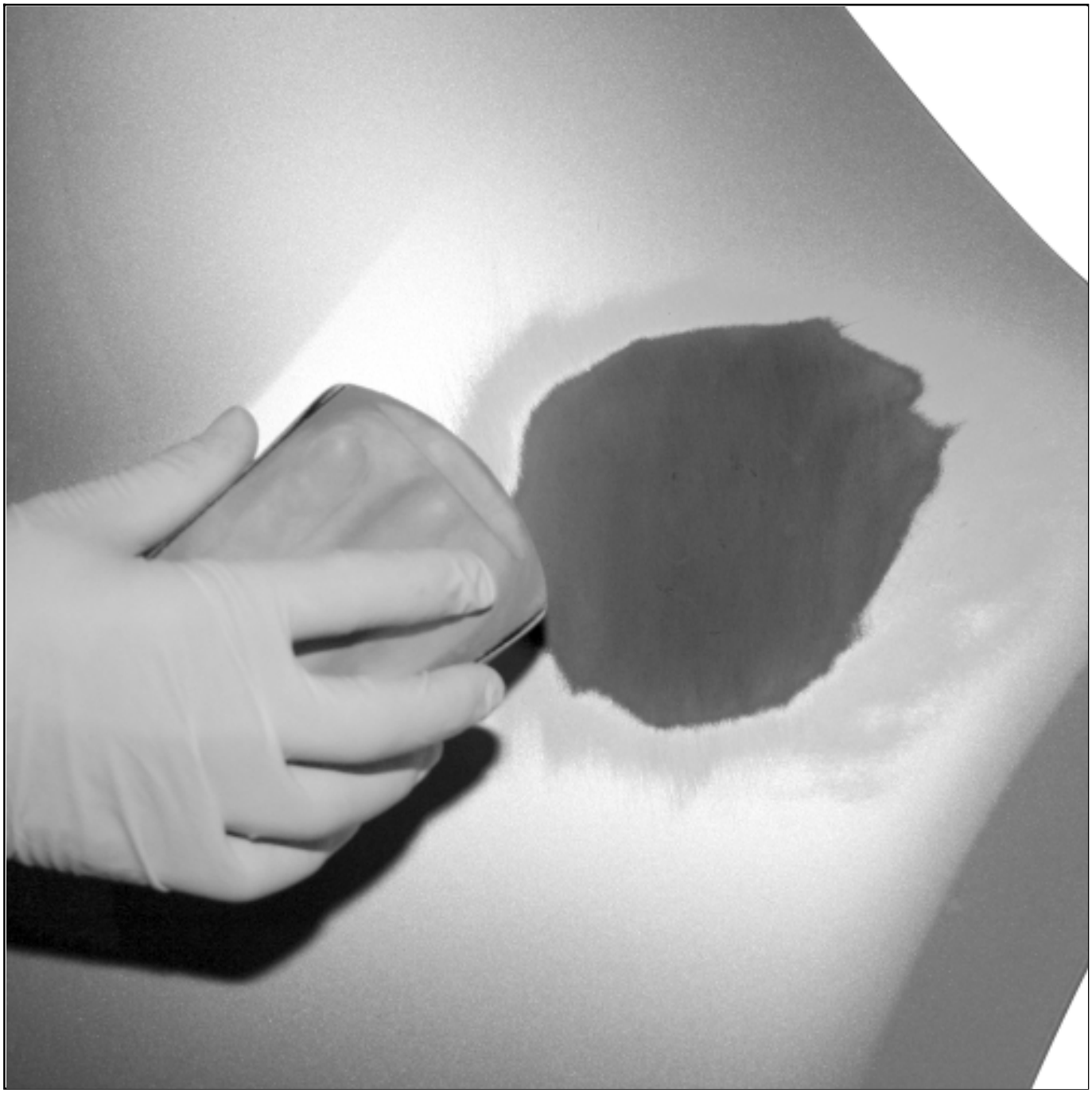

- Surface with a P 80to P 150then finish with a P 240.

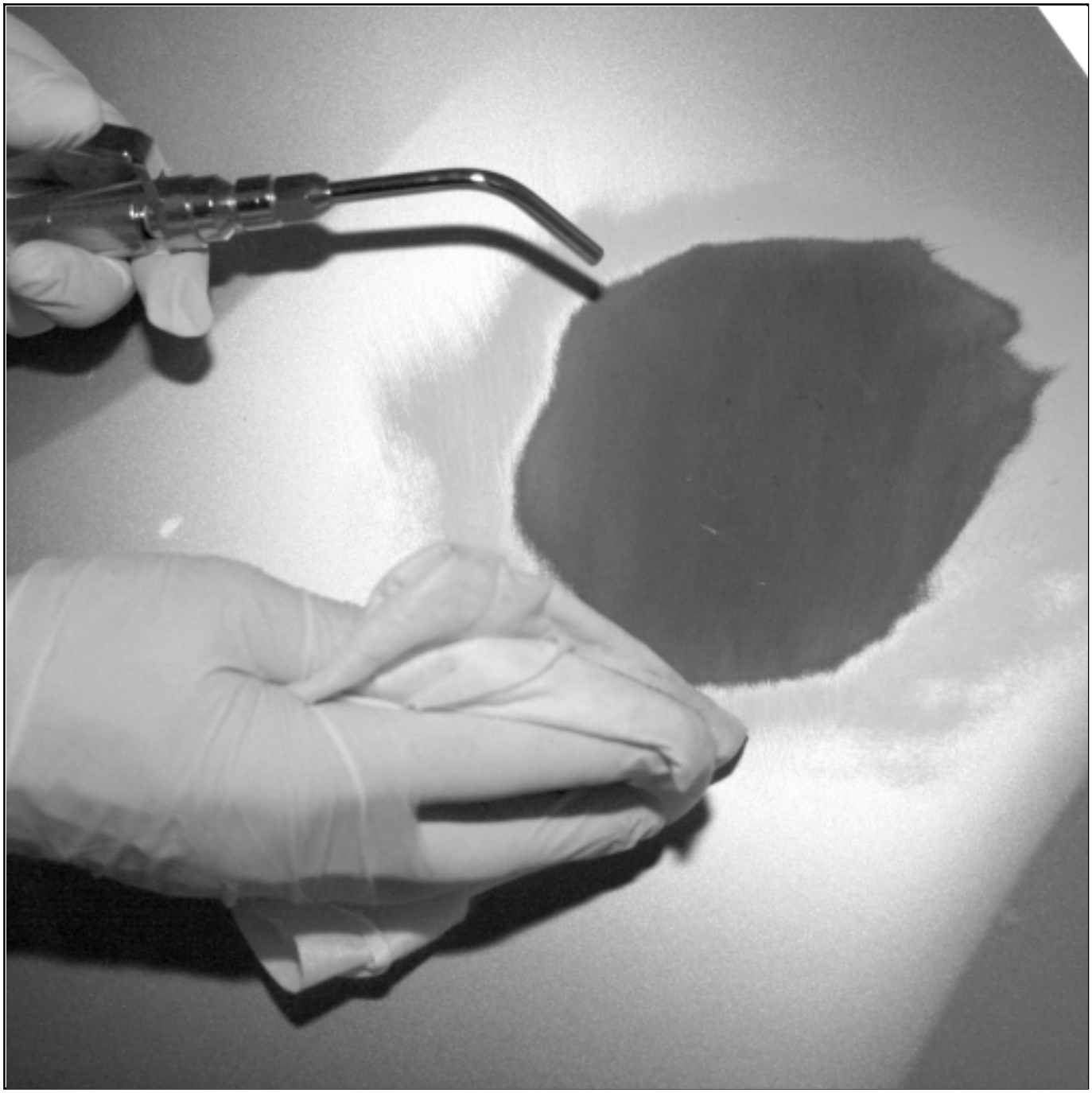

- Blow the component and clean the area to be repaired with a LINT-FREE CLOTHsoaked in ANTISTATIC THINNER Vehicle: Parts and consumables for the repair (04B, Consumables - Products).

- Wipe the area with a clean, dry LINT-FREE CLOTHVehicle: Parts and consumables for the repair (04B, Consumables - Products).

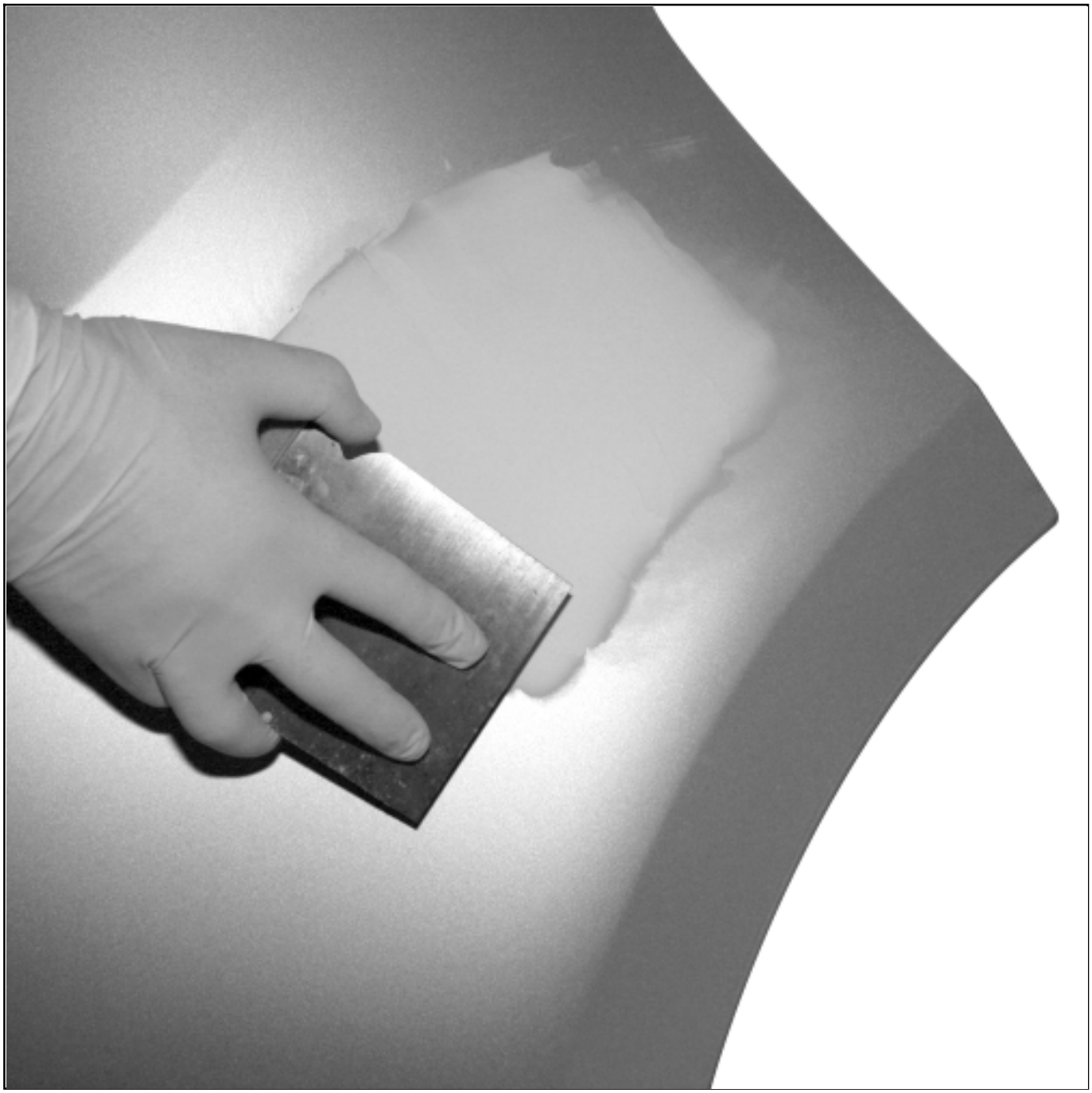

- If necessary, apply a finishing mastic(see product technical sheet) Vehicle: Parts and consumables for the repair (04B, Consumables - Products).

- Sand the finishing masticwith a P 150then finish with a P 240.

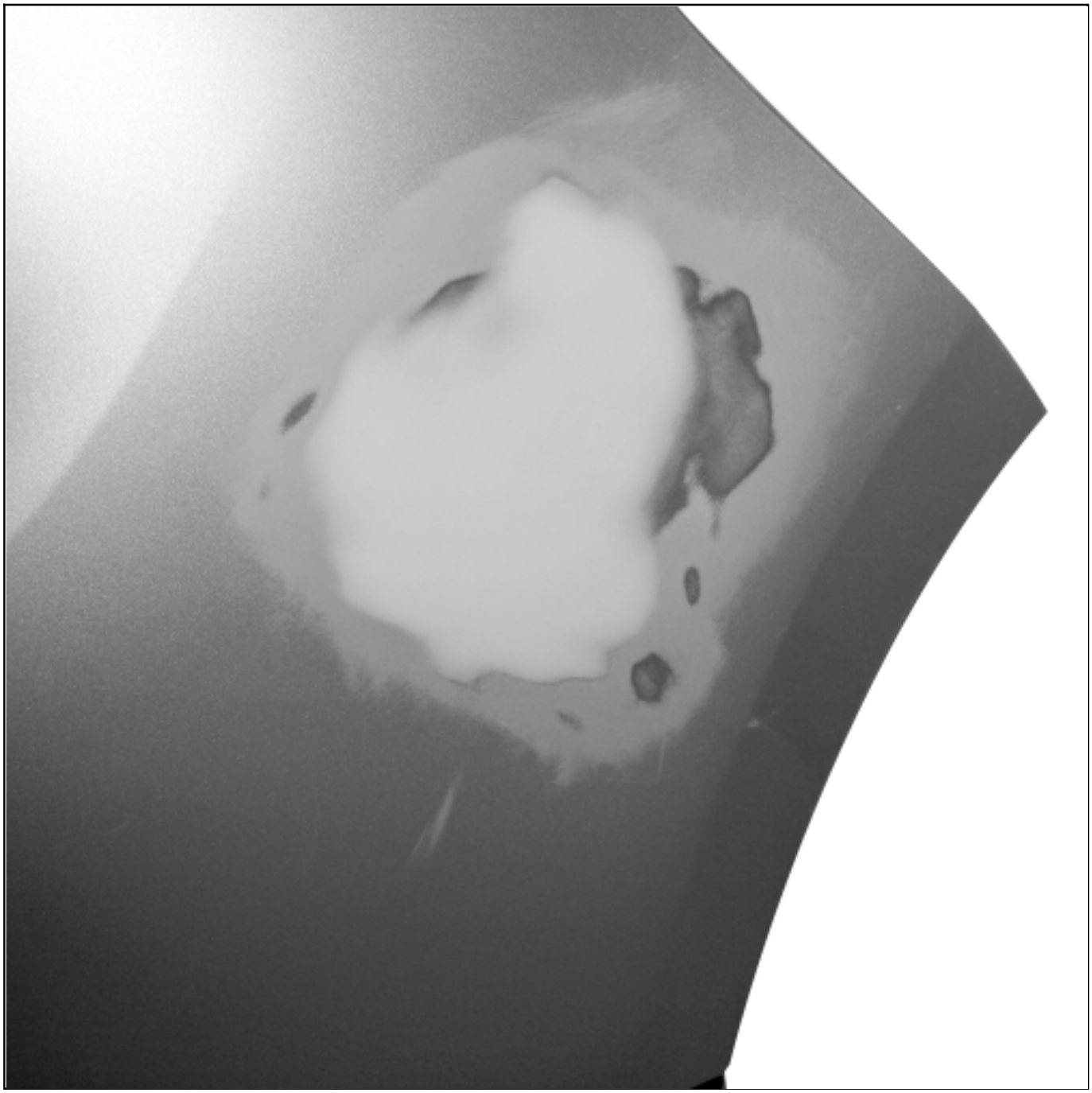

Follow the paint application procedure according to the material concerned:

- **Polypropylene / polyethylene bodywork component: Preparation and paint range** (Technical Note 592A, 95A, Paint application procedure on plastic),
- **Noryl bodywork component: Preparation and paint range** (Technical Note 592A, 95A, Paint application procedure on plastic).

Note:

Method apply only on RTM component.

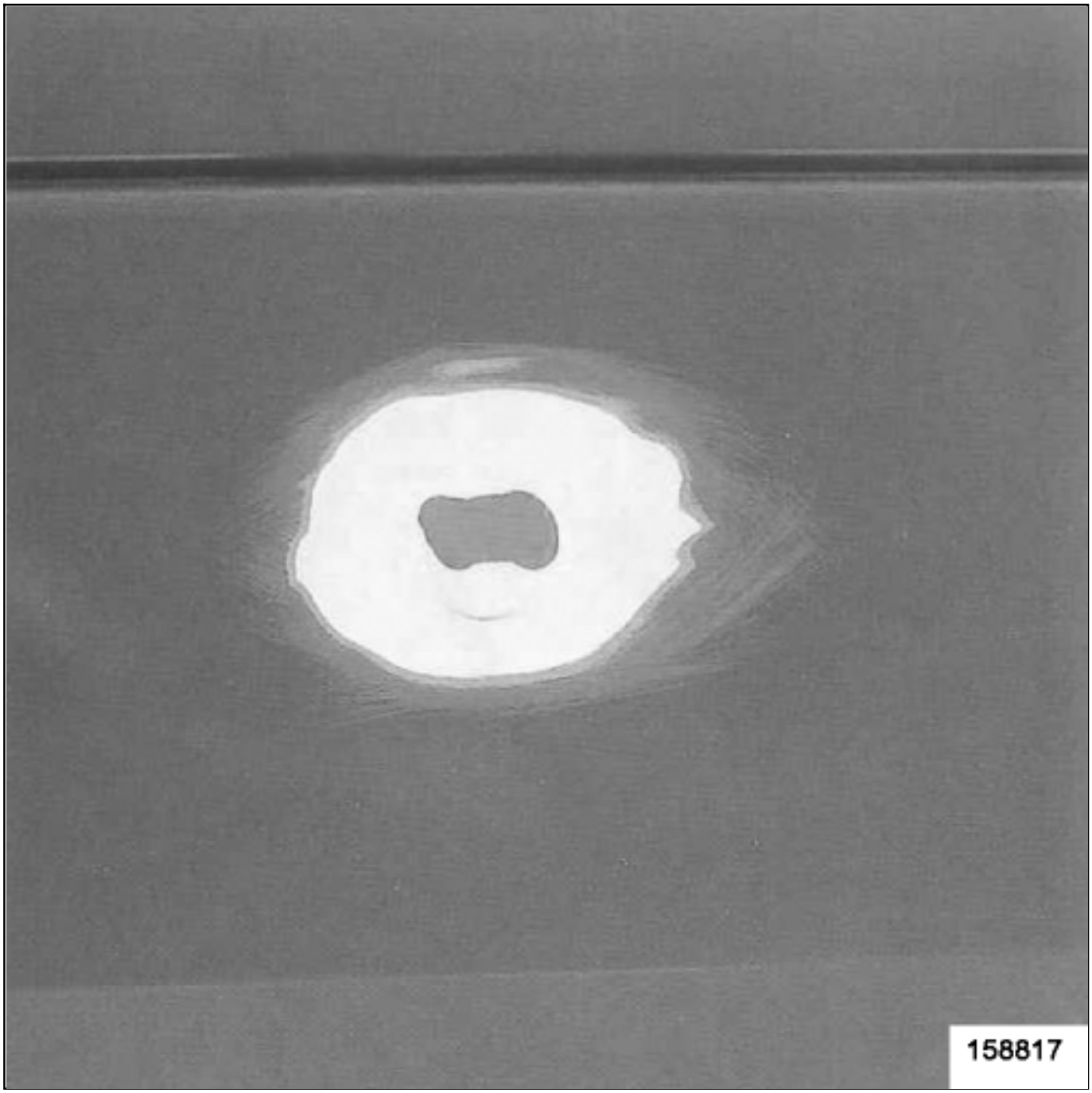

- Chamfering around a radius between 30 to 40 mm using the orbital sander with a P80.

- Sand the paint around the zone to be repaired using the orbital sander with a P 150
- Blow the component and clean the area to be repaired with the Acetone(see product techincal sheet).
- Cut a piece of materielrecovering the chamfering.
- Prepare the Epoxy resin(see 50A, General information, Products for plastic material bodywork components: Description) .

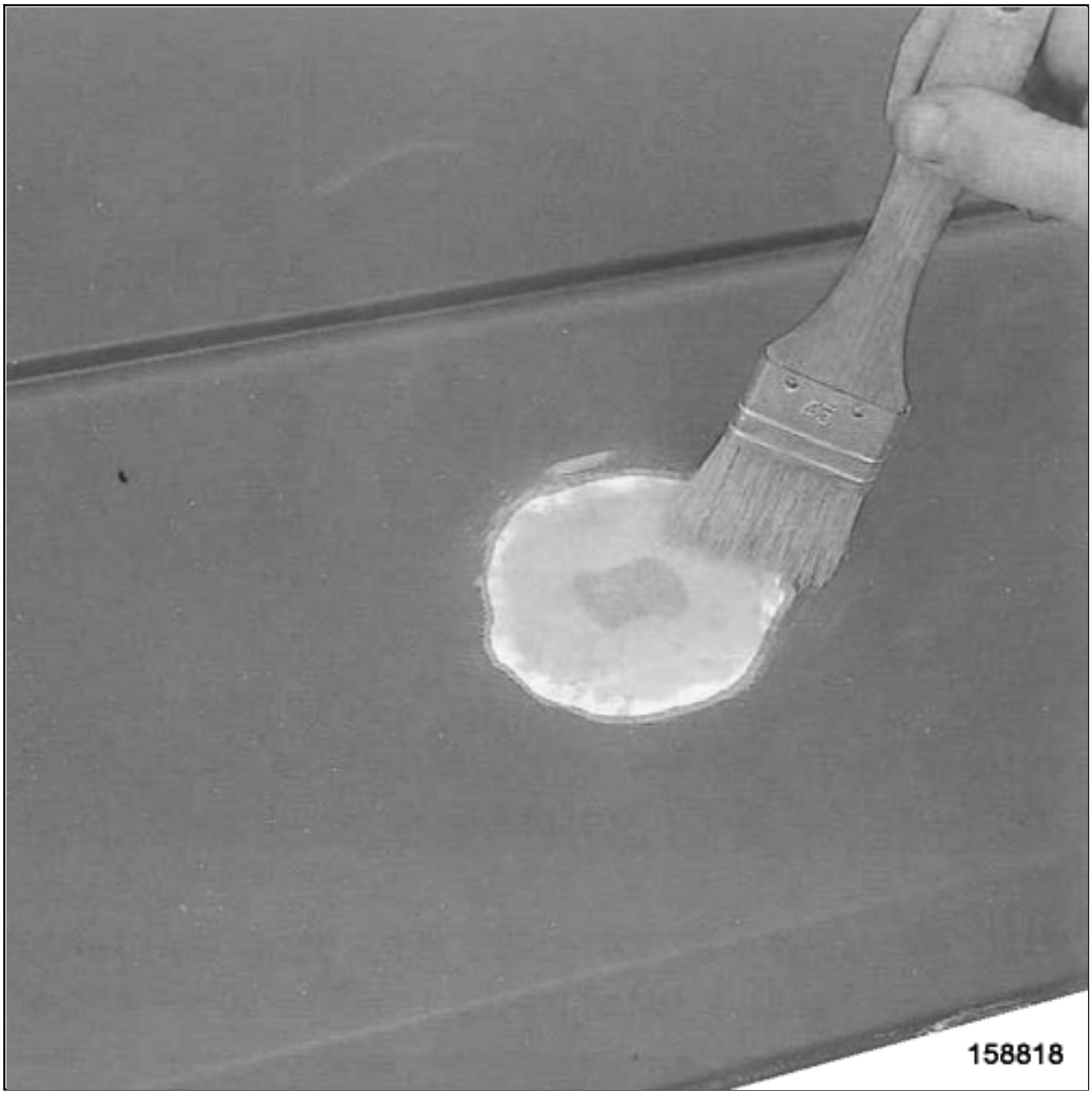

- Wet the chamfer with Epoxy resin.

- Position the reinforcement a poket.

- Soak the reinforcement with Epoxy resin.

Note:

After 15 minutes,accelerate the hardening in drying oven or in infrared drying device(60° C maxi at a distance of 70 cm).

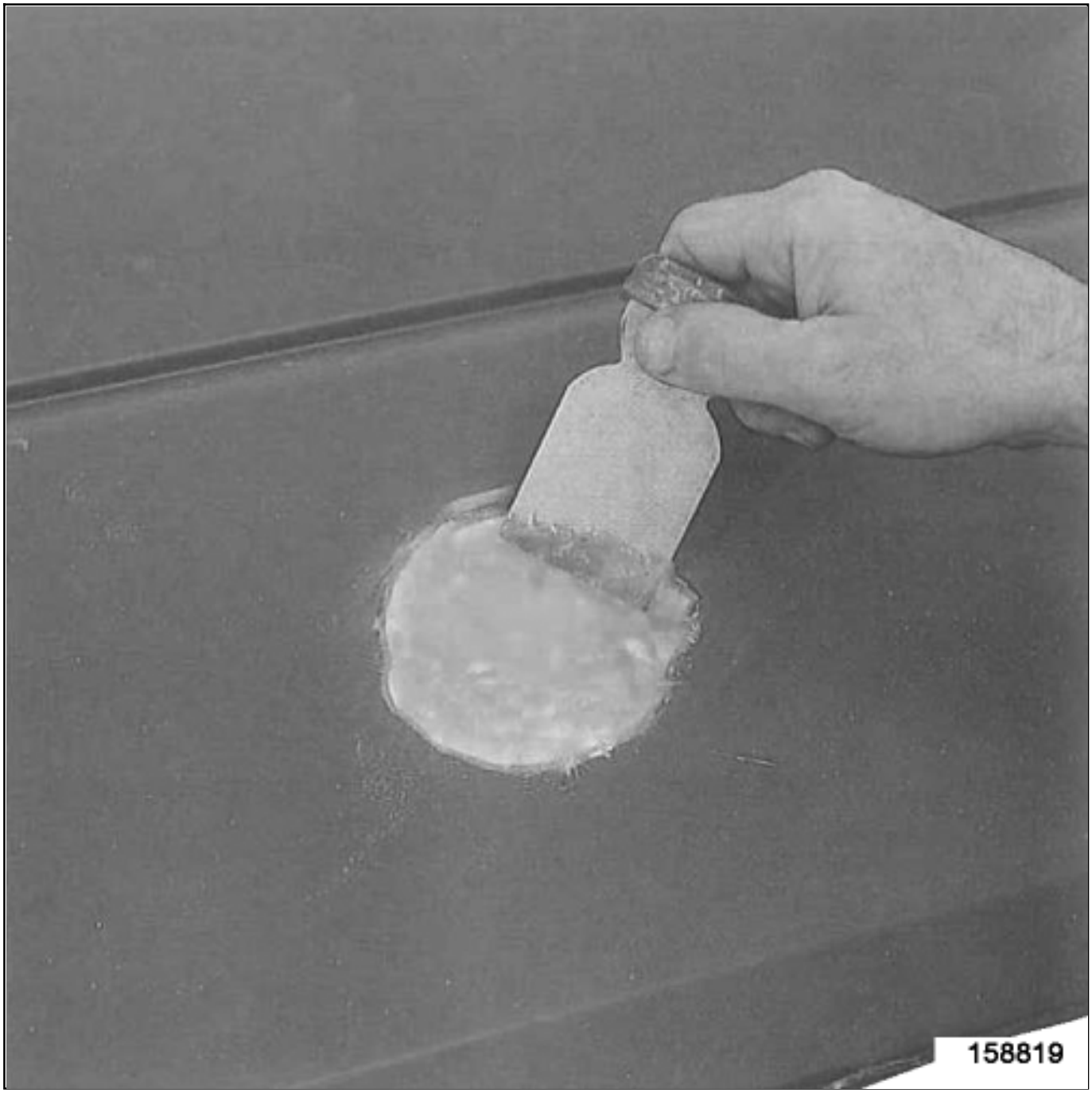

- Prepare the Epoxy resin (see 50A, General information, Products for plastic material bodywork components: Description) .

- Add short fibres with resin and well mix.

- Fill the pocket with mixture.

Note:

After 15 minutes,accelerate the hardening in drying oven or in infrared drying device(60° C maxi at a distance of 70 cm).

- Sand using the orbital sander with a P 80then with a P180and P240.

- Apply if necessary a finishing mastic(see product technical sheet). (see **Vehicle: Parts and consumables for the repair**)

- Sand the finishing masticusing a P 150then finish using a P240.

5. PROCEDURE 4

- Repairing a mounting bracket on a plastic chassis element

1- BONDING METHOD

Note:

Before any repairs, check the reparability of components made from plastic materials.

(see 50A, General information, Products for plastic material bodywork components: Description) .

(see 50A, General information, Plastic material bodywork component: Precautions for the repair) .

- Chamfer the two sections of the mounting bracket on both sides using a grinder with an angular member .

- Blast and clean the inside and outside of the component with the cleanerincluded in the Plastic repair kit box.

- Apply the adhesive primerincluded in the Plastic repair kitbox to the inside and outside of the component.

❑

Leave the adhesive primer to dry (see product technical sheet).

❑

Adjust a piece of reinforcing film (cloth) adapted to repairing the internal and external faces.

❑

Prepare the bi-component repair mastic (see 50A, General information, Products for plastic material bodywork components: Description) .

❑

Maintain pressure on the two parts with pliers.

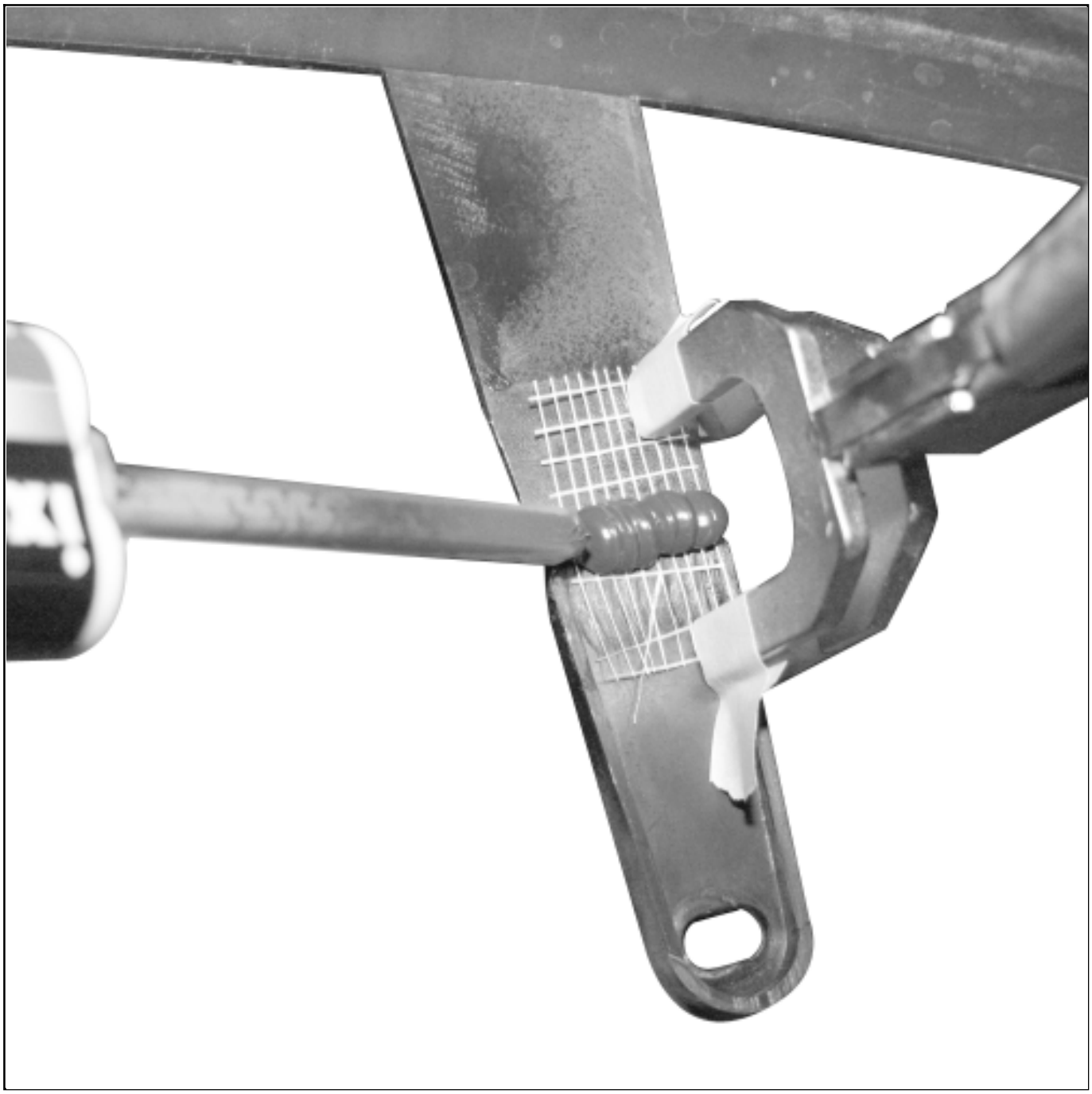

- Extrude bi-component repair mastic between the two parts.
- Smooth the bi-component repair mastic on the internal and external faces.
- Leave the bi-component repair mastic to dry (see product technical sheet).

- Surface the exterior side with a P 150then finish with a P 240.
- Retouch the paintwork if necessary.

2- WELDING METHOD

Note:

Before any repairs, check the reparability of components made from plastic materials.

(see 50A, General information, Products for plastic material bodywork components: Description) .

(see 50A, General information, Plastic material bodywork component: Precautions for the repair) .

Note:

This repair cannot be carried out on ABS, ASAand Polycarbonateplastics.

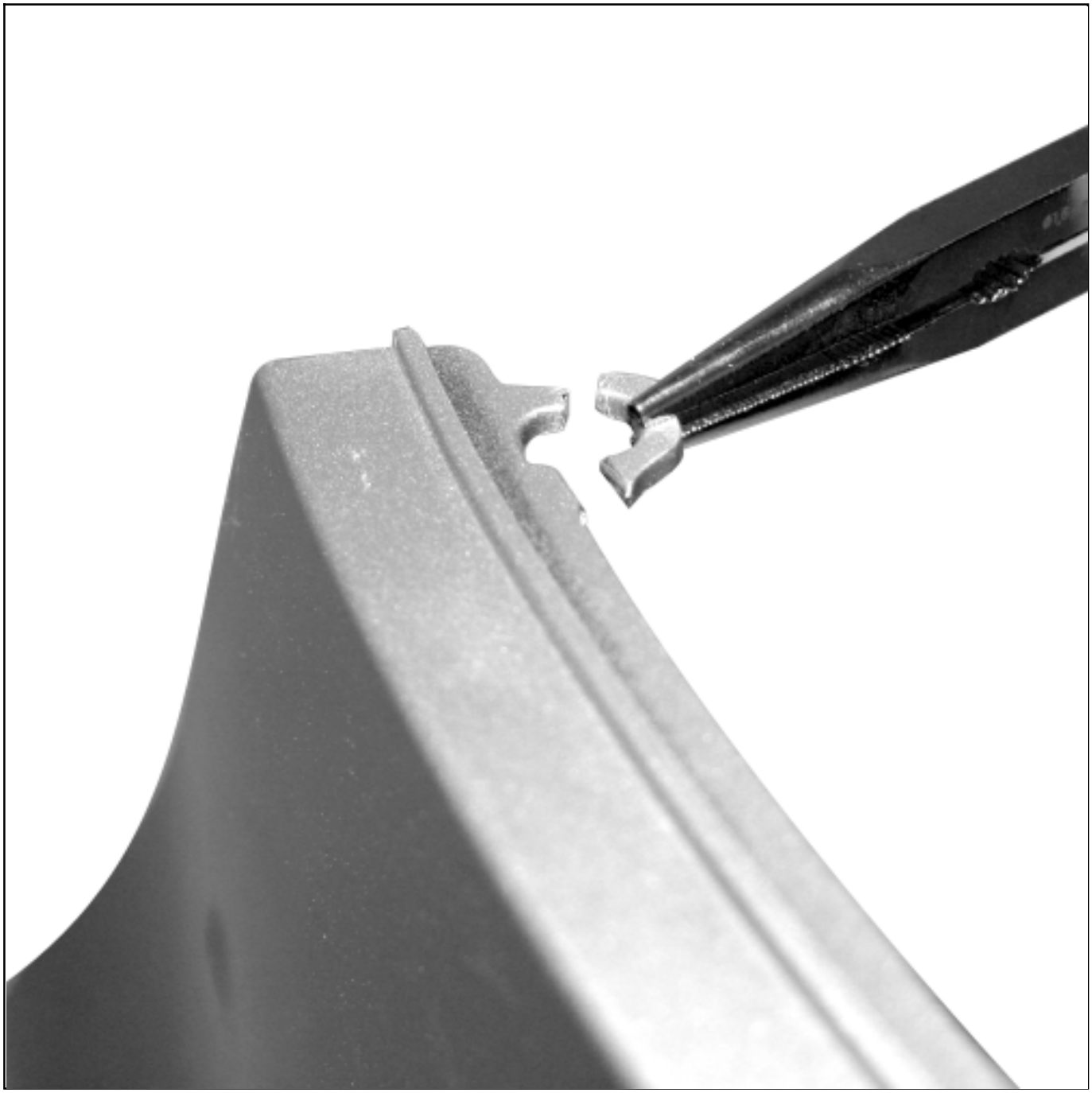

- Wash the component in soapy water and rinse in clean water.

- Clean the area to be repaired with a LINT-FREE CLOTHsoaked in ANTISTATIC THINNERVehicle: Parts and consumables for the repair (04B, Consumables - Products).

- Wipe the area with a clean, dry LINT-FREE CLOTHVehicle: Parts and consumables for the repair (04B, Consumables - Products).

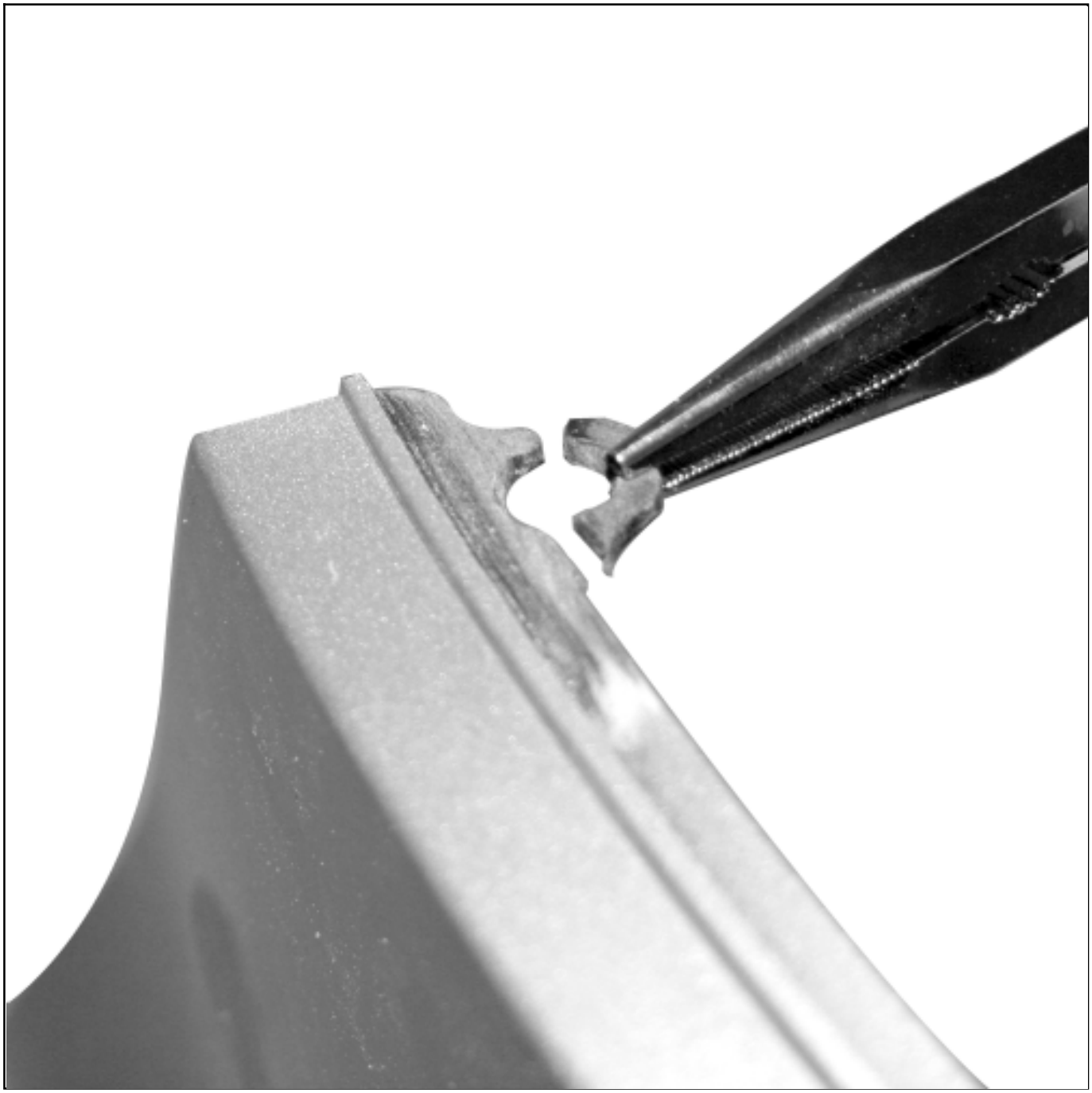

- Strip the paint with P 150on the repair area.

- Blow the component and clean the area to be repaired with a LINT-FREE CLOTHsoaked in ANTISTATIC THINNER Vehicle: Parts and consumables for the repair (04B, Consumables - Products).

- Wipe the area with a clean, dry LINT-FREE CLOTHVehicle: Parts and consumables for the repair (04B, Consumables - Products).

Preheat the soldering iron.

- Cut the stainless steel mesh according to the shape of the support.

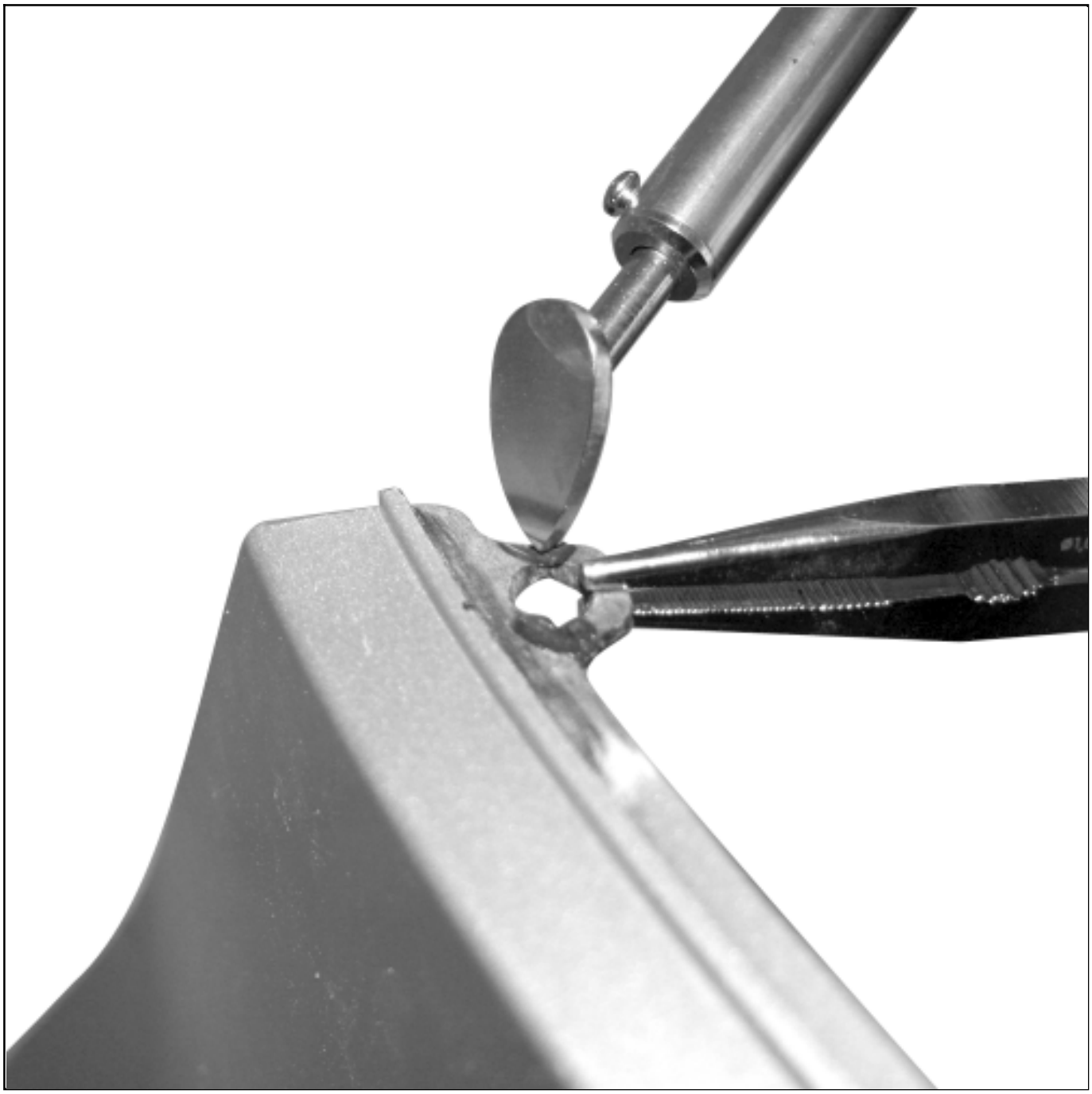

- Spot-weld with the tip of the soldering iron on the ends in order to hold the mounting bracket.

-

Cool each spot weld, for two seconds, vigorously with the cooler Vehicle: Parts and consumables for the repair (04B, Consumables - Products).

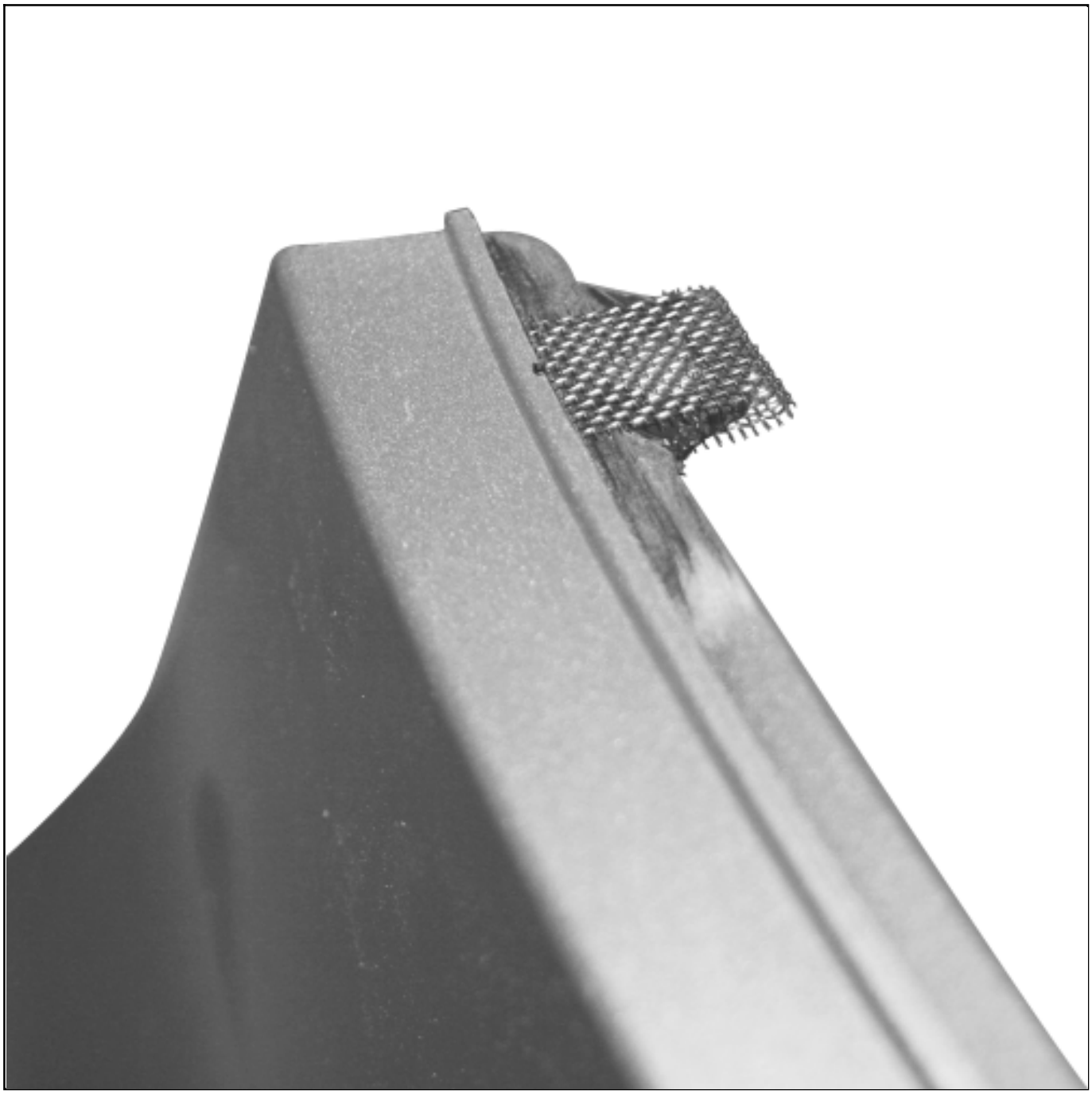

❑

Position the stainless steel mesh and hold it using a dedicated tool.

- Enclose the stainless steel frame in the plastic material.

- Cool the whole of the repaired area for two seconds, vigorously with the cooler[Vehicle: Parts and consumables for the repair](#) (04B, Consumables - Products).

- Add material by preheating the welding rod with the tip of the soldering iron.

- Cool the whole of the repaired area for two seconds, vigorously with the cooler Vehicle: Parts and consumables for the repair (04B, Consumables - Products).

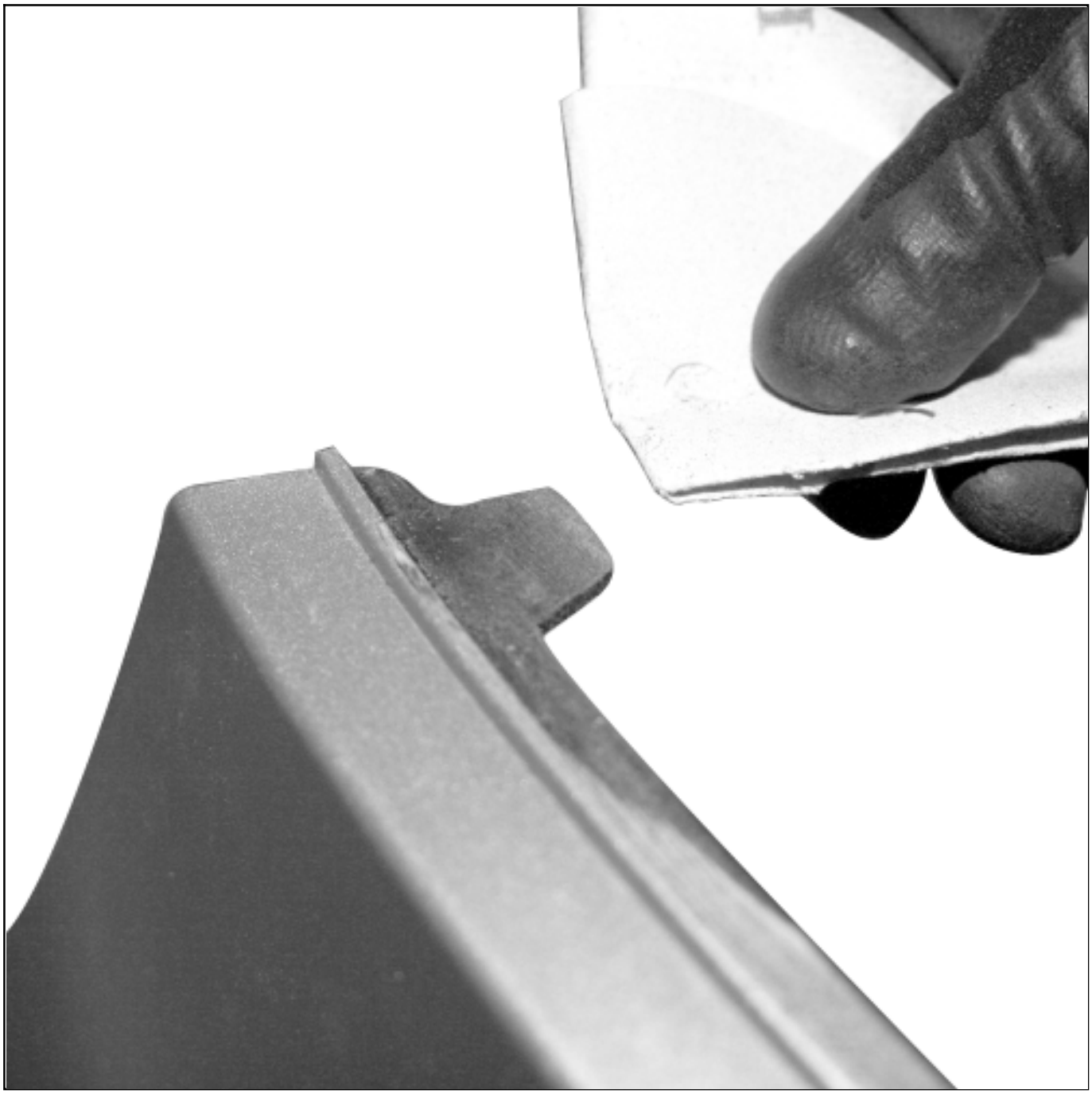

- Surface with a P 80 to P 150 then finish with a P 240.

- Blow the component and clean the area to be repaired with a LINT-FREE CLOTH soaked in

ANTISTATIC THINNER Vehicle: Parts and consumables for the repair (04B, Consumables - Products).

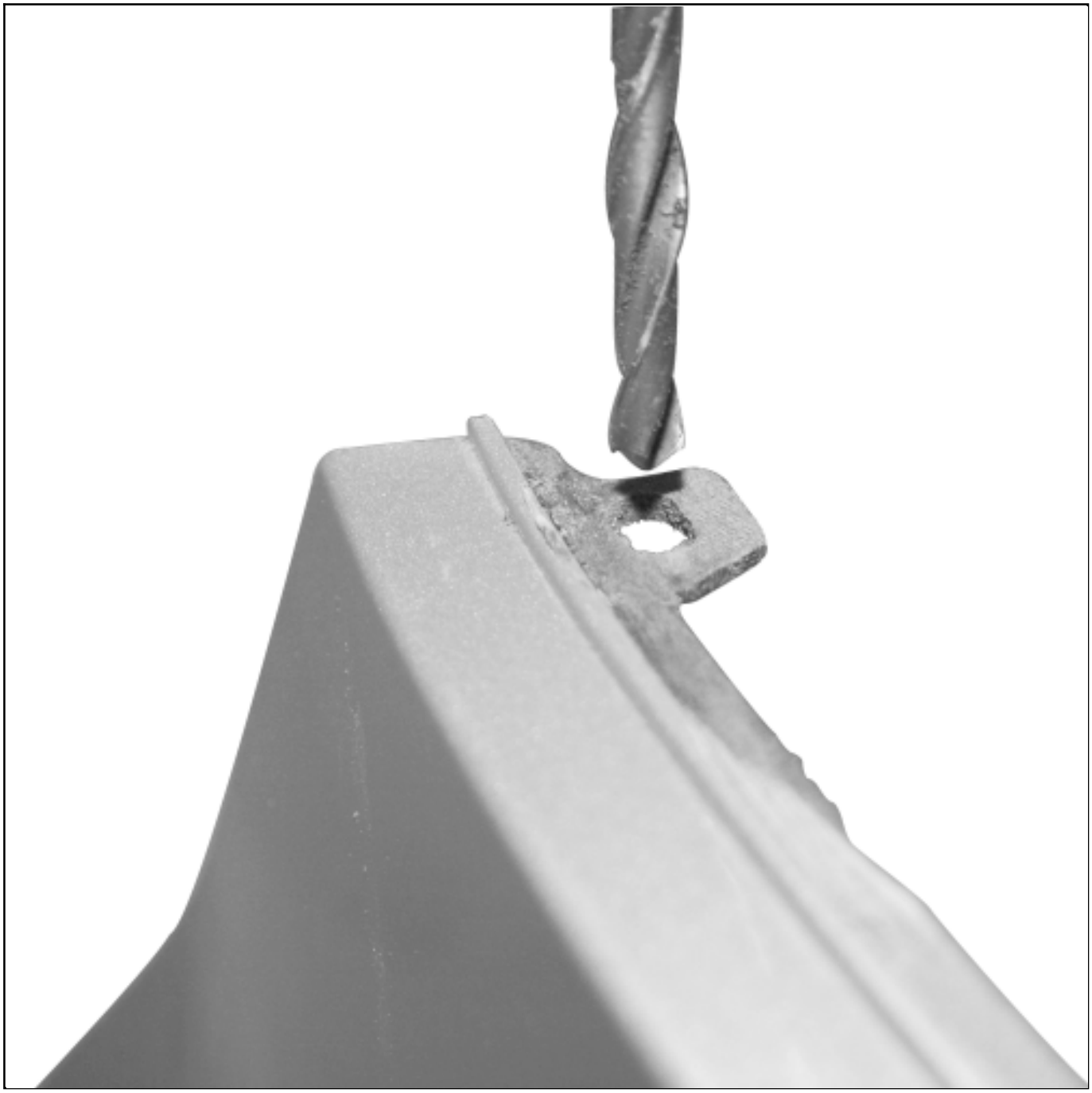

- Adjust the shape of the part to return it to its original appearance.

- Retouch the paintwork if necessary.

6. PROCEDURE 5

- Partial replacement of an element by cuting.

> Note:
>
> Method apply only on RTM component.

> Note:
>
> The components are manufactured by the method referred to as "contact" .
>
> The reparation is performed by the interne face of the component.

- Cut the damaged component beyond the cracks.
- Cut and adjust the new component.
- Prepare a space from 5to 10mm between the two components.

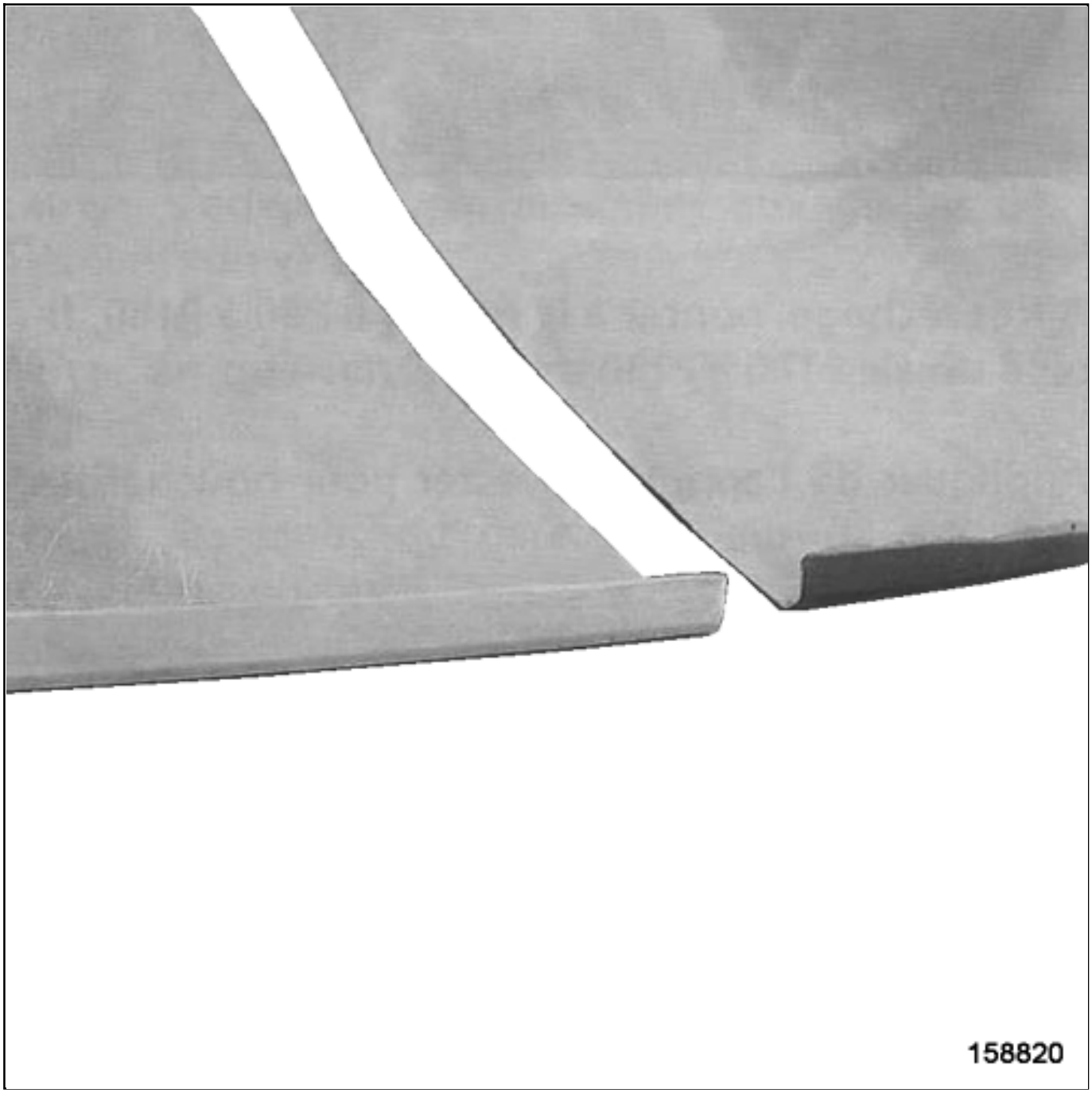

- Chamfering the interne face of components on 100 mmwide.

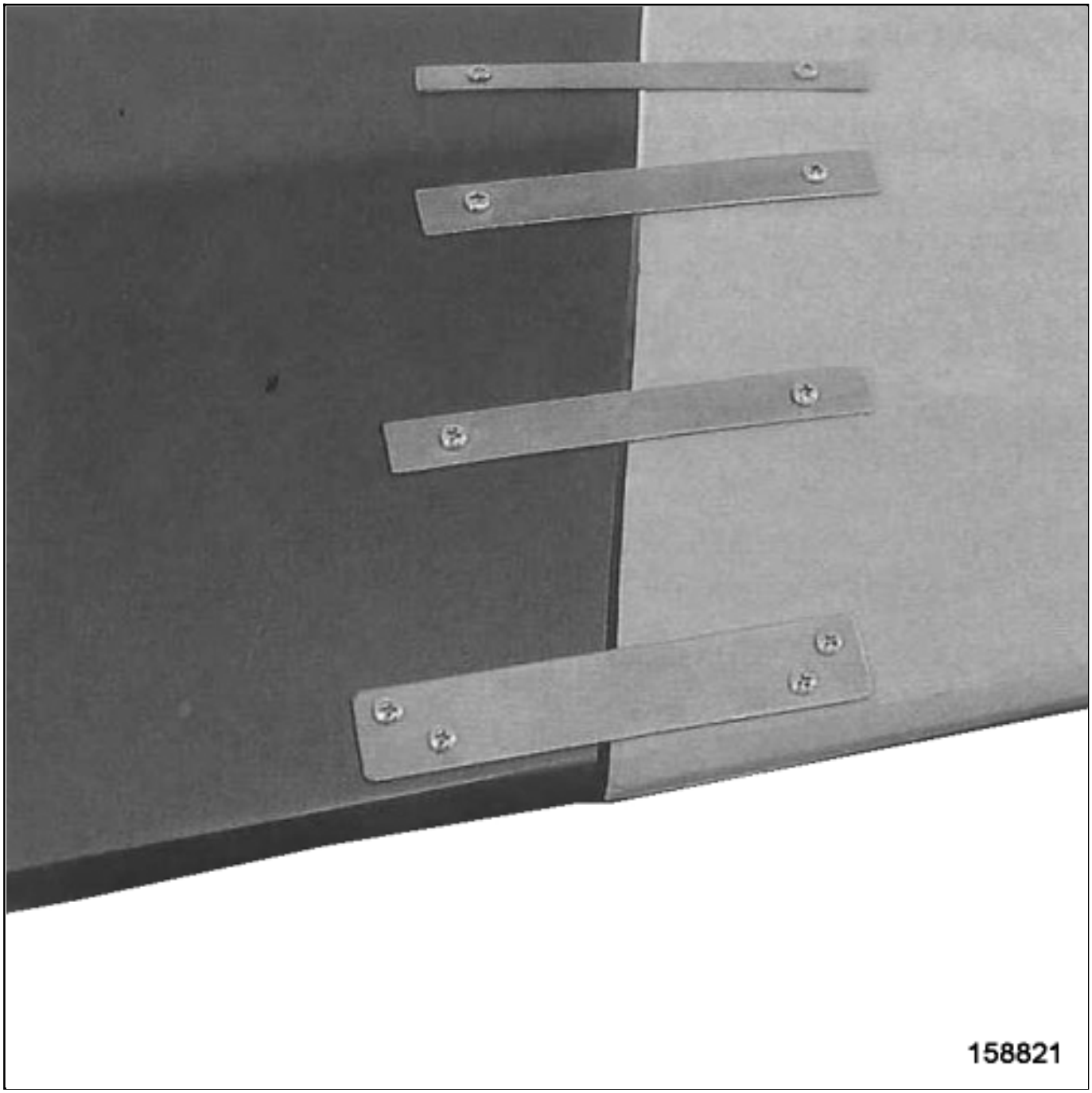

- Position the new component.

- Hold the new component by the externe face using a plate pad(local manufactured)and fix them with plate screws.

- Check the clearance and the flush fitting.

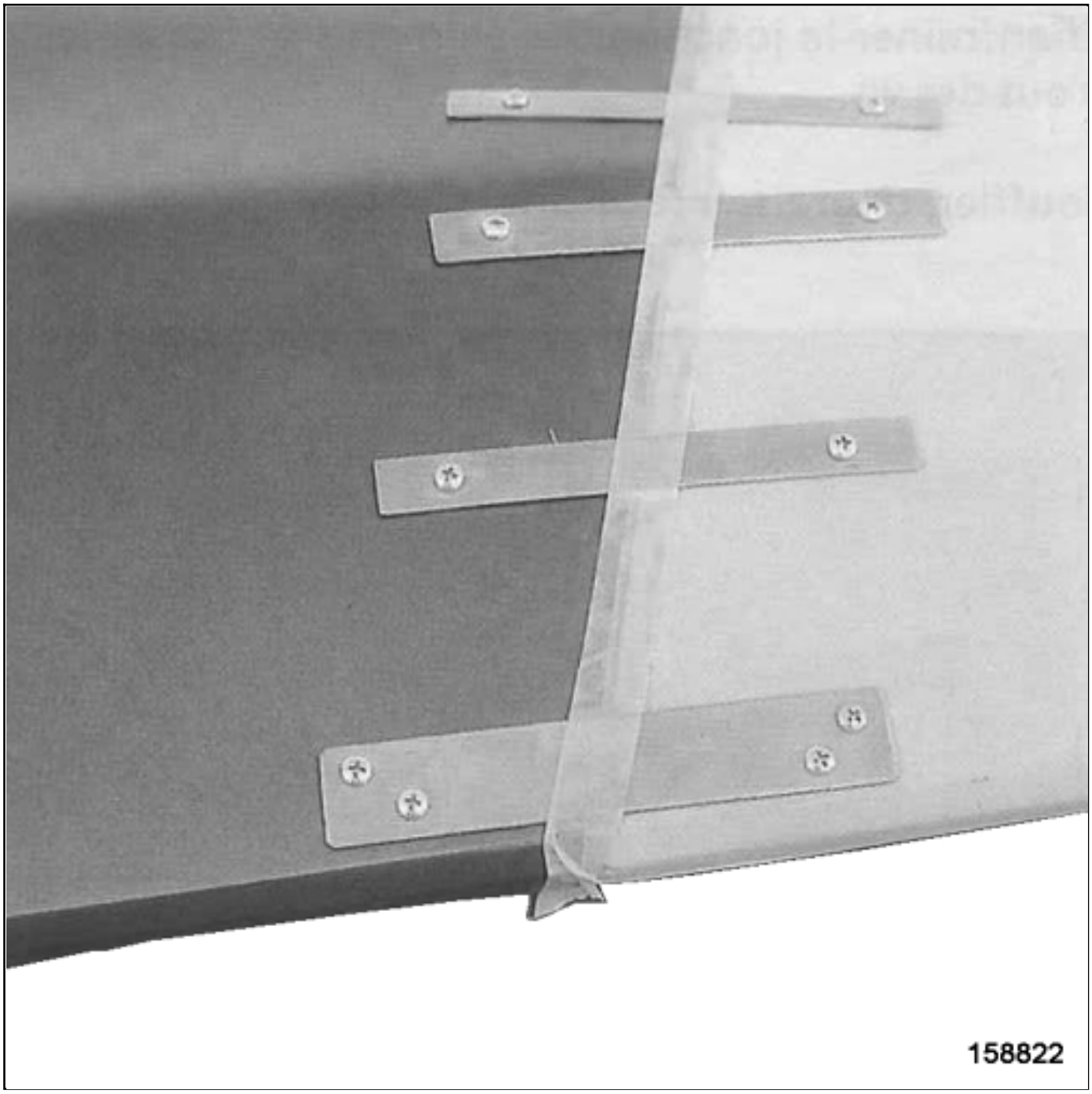

- Bond a masking tape on externe face on all reparation length.

- Blow the component and clean the area to be repaired with the Acetone(see product techincal sheet).

- Cut a piece of materielrecovering the reparation assembly.

- Prepare the Epoxy resin(see 50A, General information, Products for plastic material bodywork components:

Description) .

-

Put the material strip by soaking with resin.

Note:

Pay particular attention at output screw area and at strips junction reinforcement to prevent the air bubbles form.

Note:

After 15 minutes,accelerate the hardening in drying oven or in infrared drying device(60° C maxi at a distance of 70 cm).

Remove the pads.

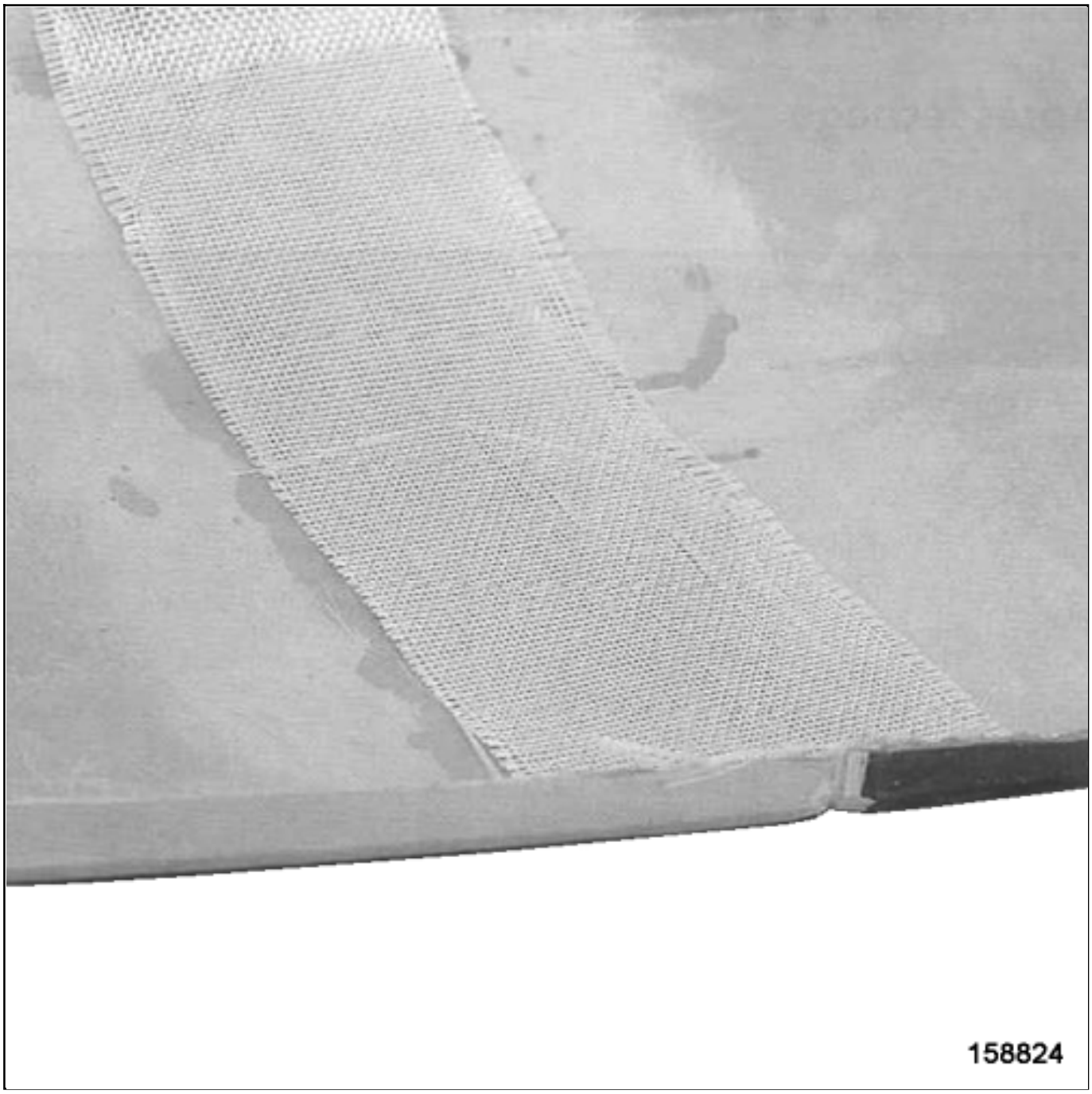

Prepare the reinforcement strips(material, cloth)by cuting then in a growing order 10 to 15 mm

Note:

According with the component width, the reinforcement strips number is variable, the purpose is to conserve the characteristic similar to the original.

- Sand the zone to be repaired using the orbital sander with a P 40

- Blow the component and clean the area to be repaired with the Acetone(see product techincal sheet).

- Prepare the Epoxy resin(see 50A, General information, Products for plastic material bodywork components: Description) .

- Put the material strip by soaking with resin.

- Pass the spiked roller.

Note:

After 15 minutes,accelerate the hardening in drying oven or in infrared drying device(60° C maxi at a distance of 70 cm).

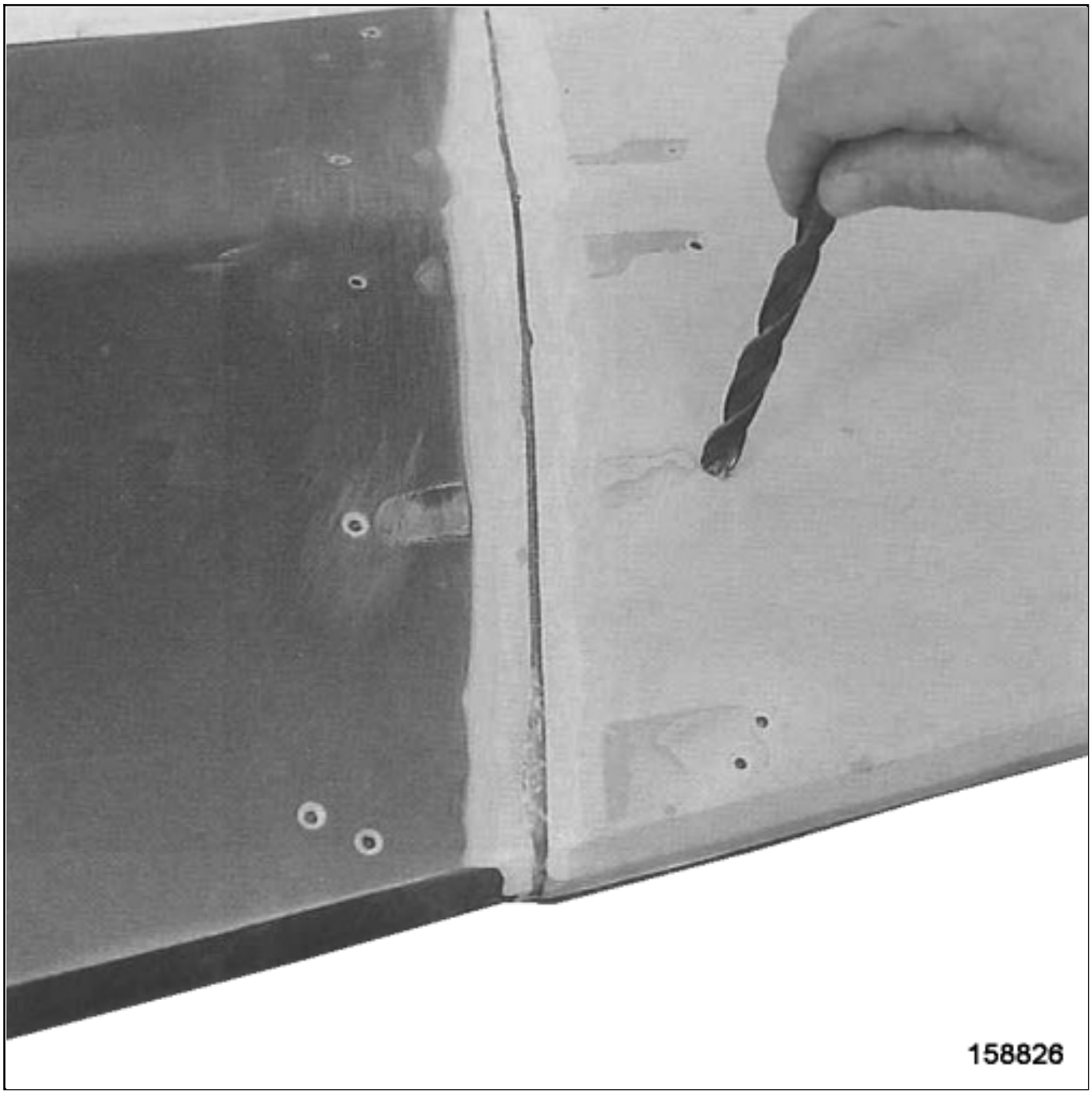

- Chamfering the components junction.

Countersink the screws holes.

- Blow the component and clean the area to be repaired with the Acetone(see product techincal sheet).

- Prepare the Epoxy resin(see 50A, General information, Products for plastic material bodywork components: Description) .

- Add short fibres with resin and well mix.

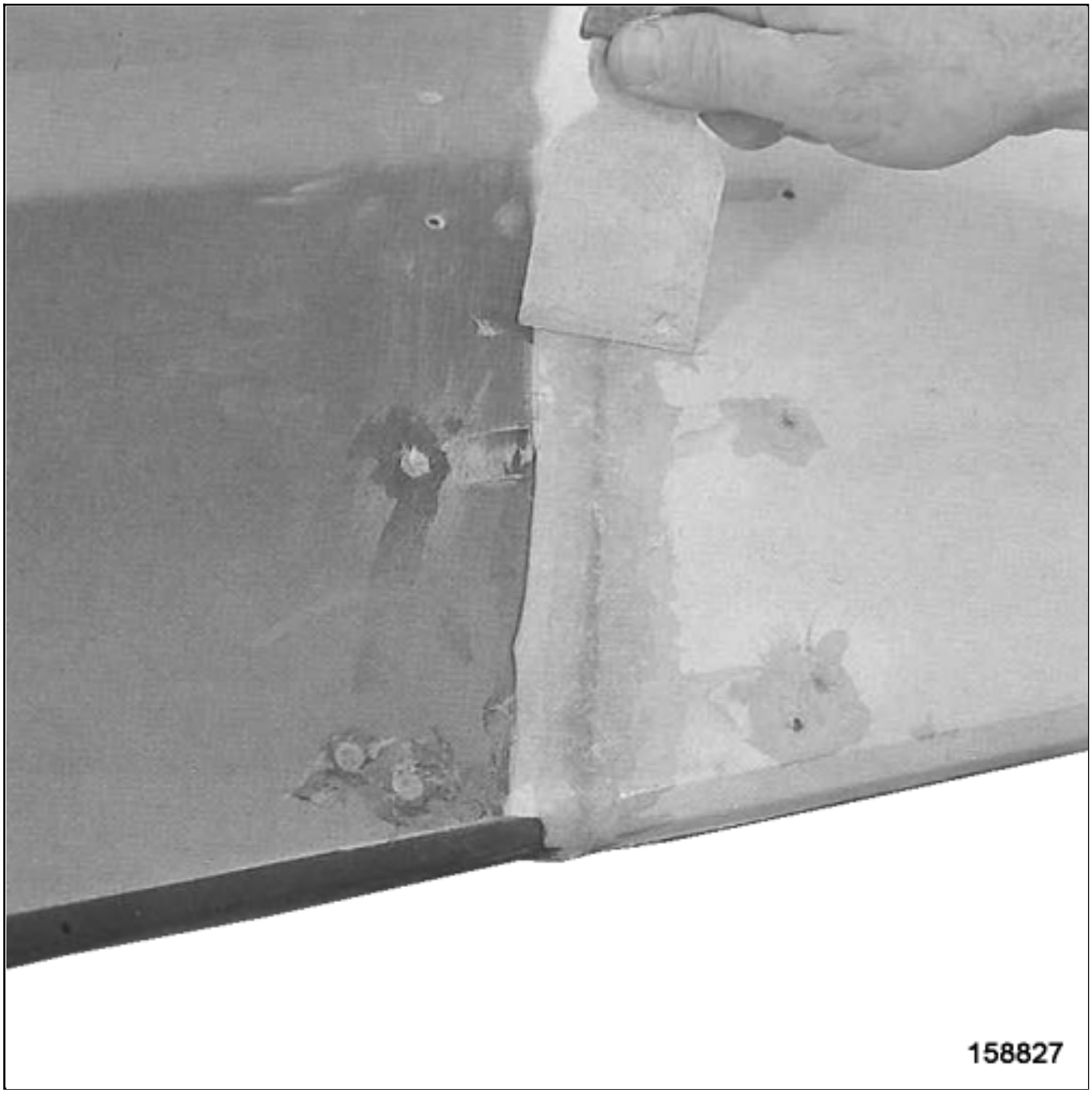

❑

Fill the chamfer and the holes using a spatula.

Note:

After 15 minutes,accelerate the hardening in drying oven or in infrared drying device(60° C maxi at a distance of 70 cm).

❑

Apply if necessary a finishing mastic(see product technical sheet). (see **Vehicle: Parts and consumables for the repair**)

❑

Sand the finishing masticusing a P 150then finish using a P240.

7. PROCEDURE 6

❑

Partial replacement of an element by cuting with patcht drilling.

Note:

Method apply only on RTM component.

Note:

The components are manufactured by the method referred to as "contact" .

The reparation is performed by the interne face of the component.

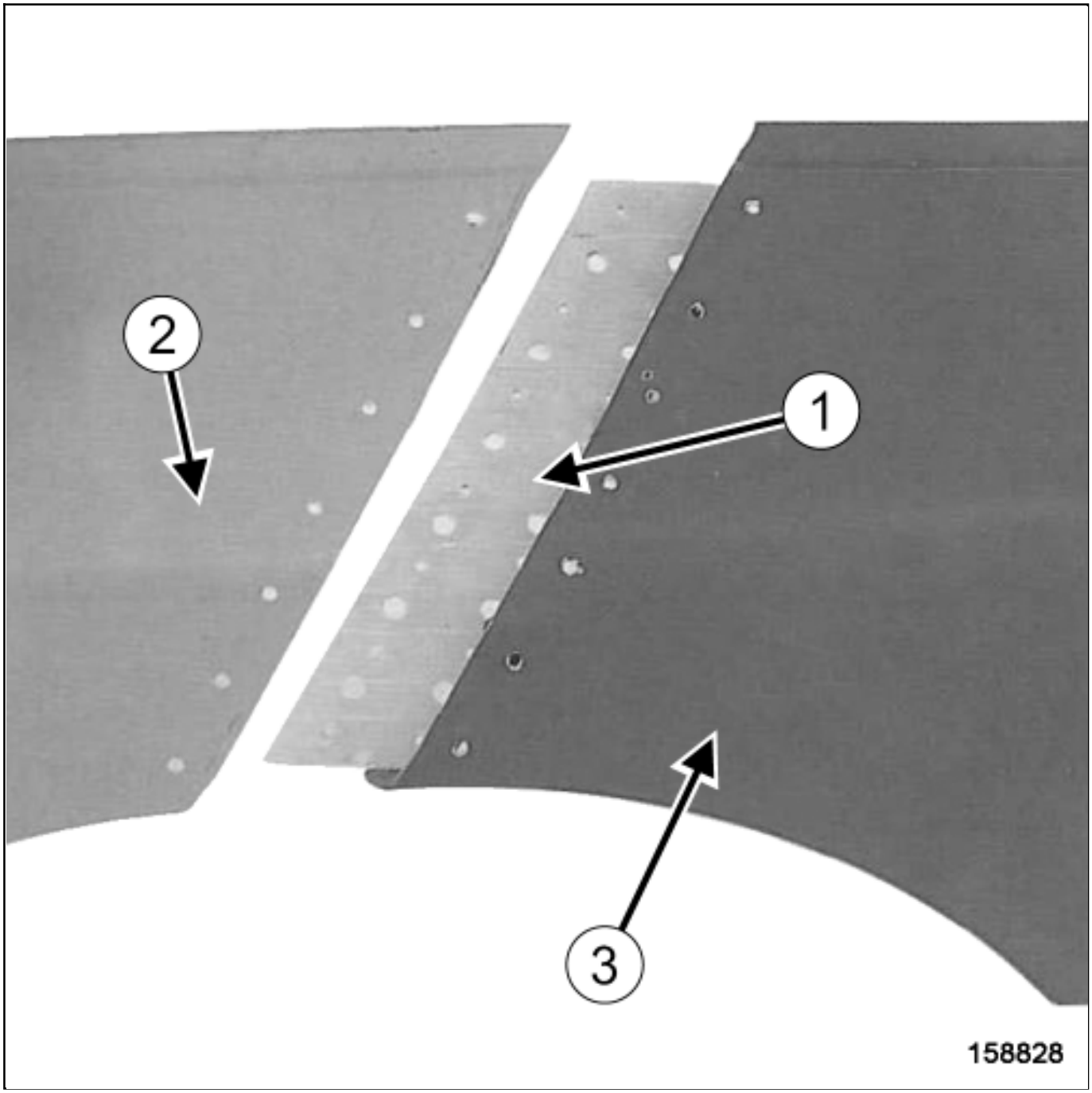

- Cut the damaged component for facilitate the patcht drilling.

- Cut and adjust the new component.

- Drill the component on the vehicle.
- Temporary fit on the vehicle the patch drilling with plate screws.
- Position the new comonent on the vehicle.
-

Fit on the vehicle the patch drilling with plate screws.

- If necessary hold the new components with locking pliers.
- Check the new component position.
- Remove all components.

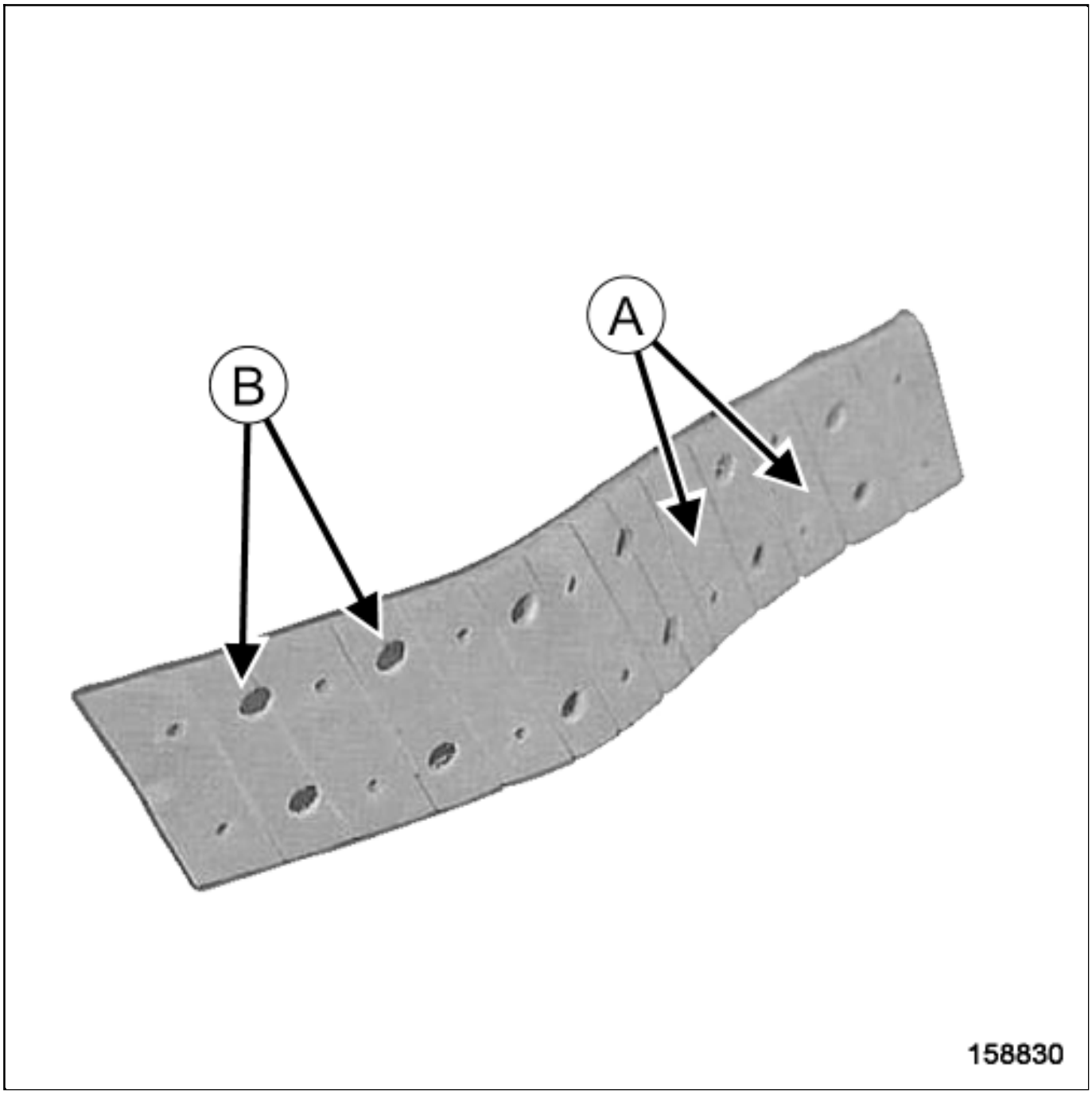

-

Do the grooves(A) , in the intern al side of patch drilling for adjust to the curve of component on the vehicle.

- Drill the holes(B) with a 8 mmdiameter.
- Countersink the holes fron external side.
- Sand the zone to be repaired using the orbital sander with a P 40
- Blow the component and clean the area to be repaired with the Acetone(see product techincal sheet).
- Prepare the Epoxy resin(see 50A, General information, Products for plastic material bodywork components: Description) .

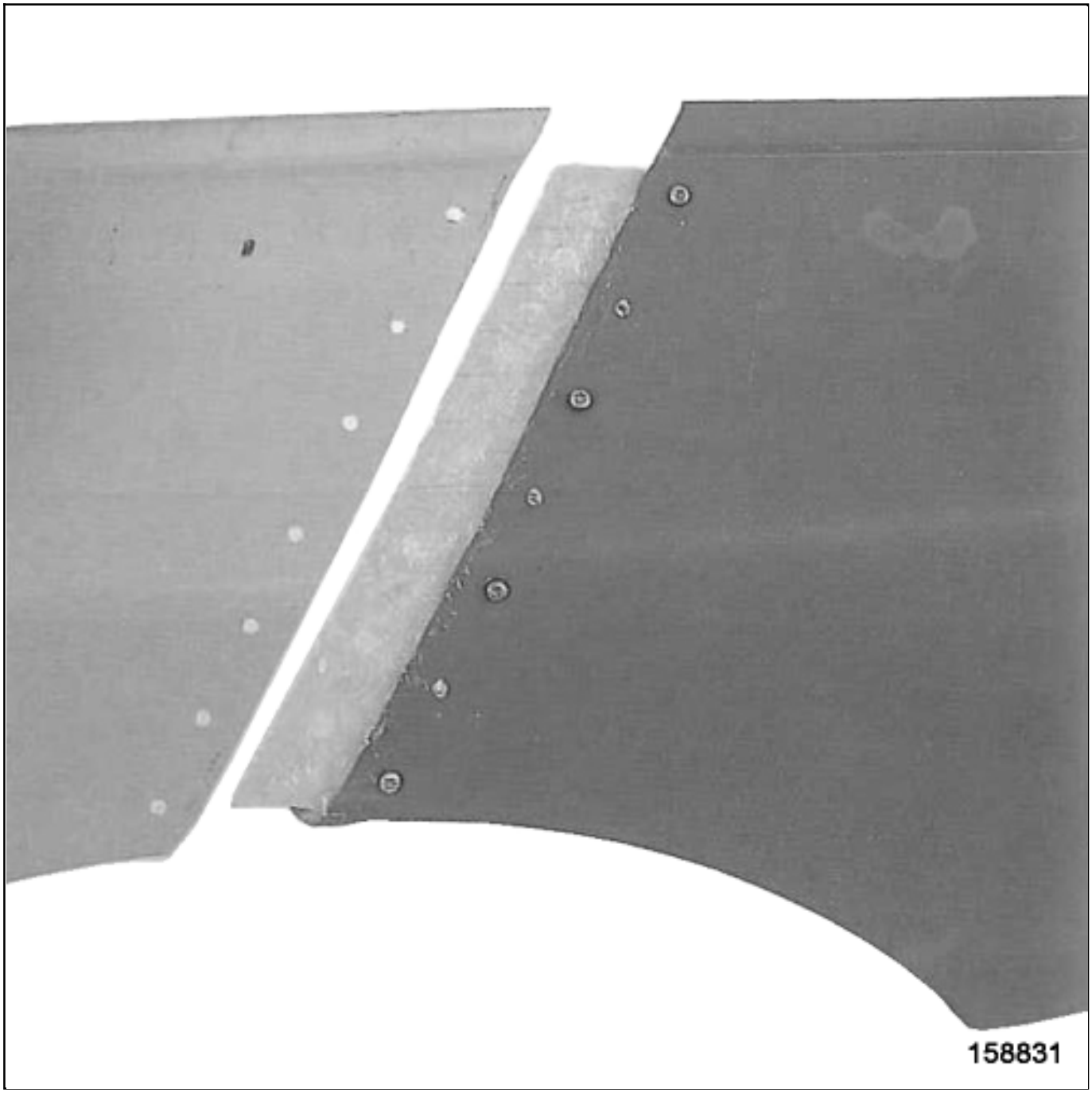

- Band the half way of patcht drillingand fit on the component on the vehicle using plate screws.

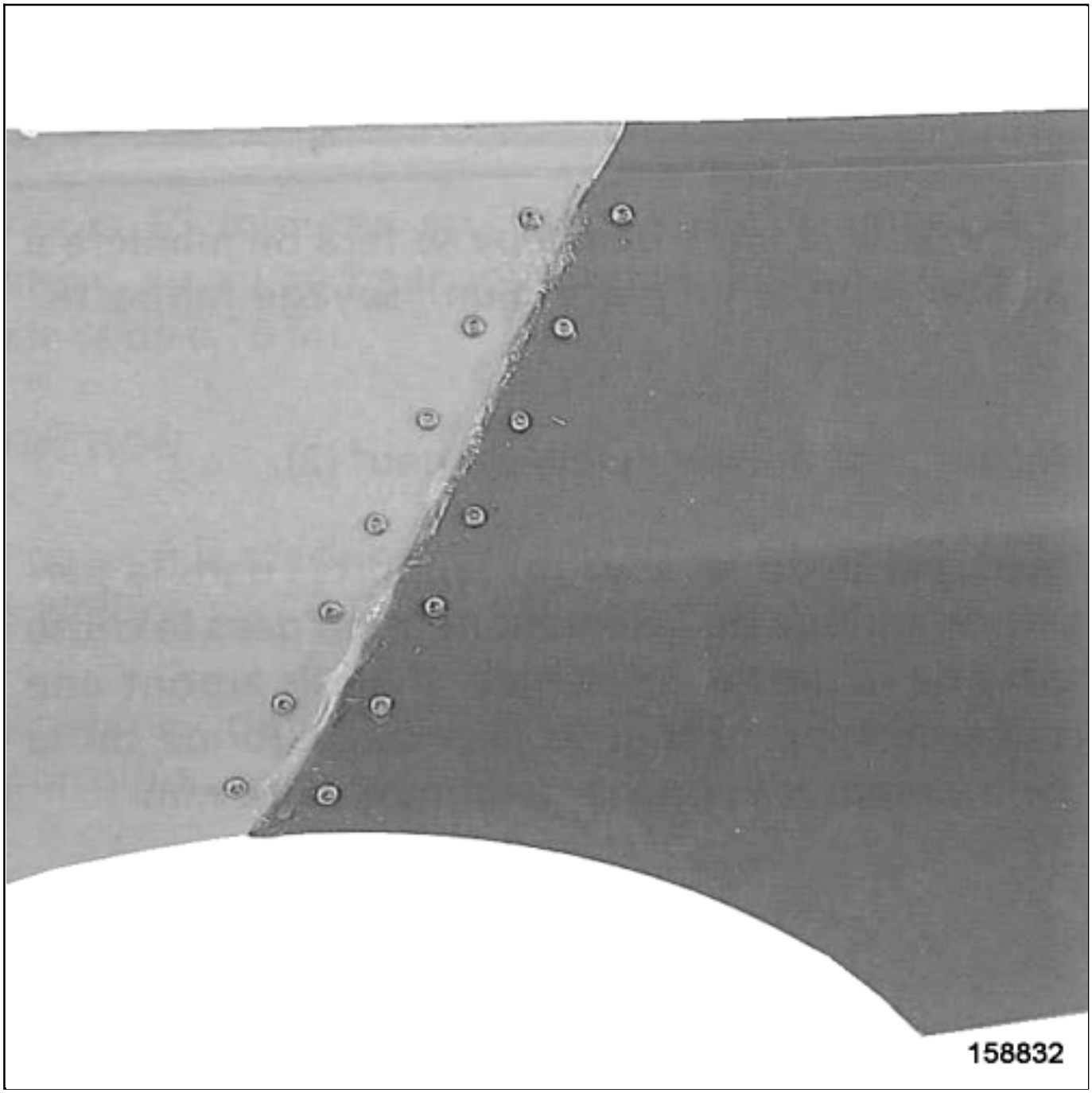

Band the second half way of patcht drilling.

Note:

After 15 minutes,accelerate the hardening in drying oven or in infrared drying device(60° C maxi at a distance of 70 cm).

Remove the plate screws.

- Blow the component and clean the area to be repaired with the Acetone(see product techincal sheet).

- Prepare the Epoxy resin(see 50A, General information, Products for plastic material bodywork components: Description) .

- Apply the reinforcement by soaking of resin.

Note:

After 15 minutes,accelerate the hardening in drying oven or in infrared drying device(60° C maxi at a distance of 70 cm).

- Sand the zone to be repaired using the orbital sander with a P 40
- Blow the component and clean the area to be repaired with the Acetone(see product techincal sheet).
- Prepare the Epoxy resin(see 50A, General information, Products for plastic material bodywork components: Description) .
- Add short fibres with resin and well mix.
- Apply the mixture on reparation zone.

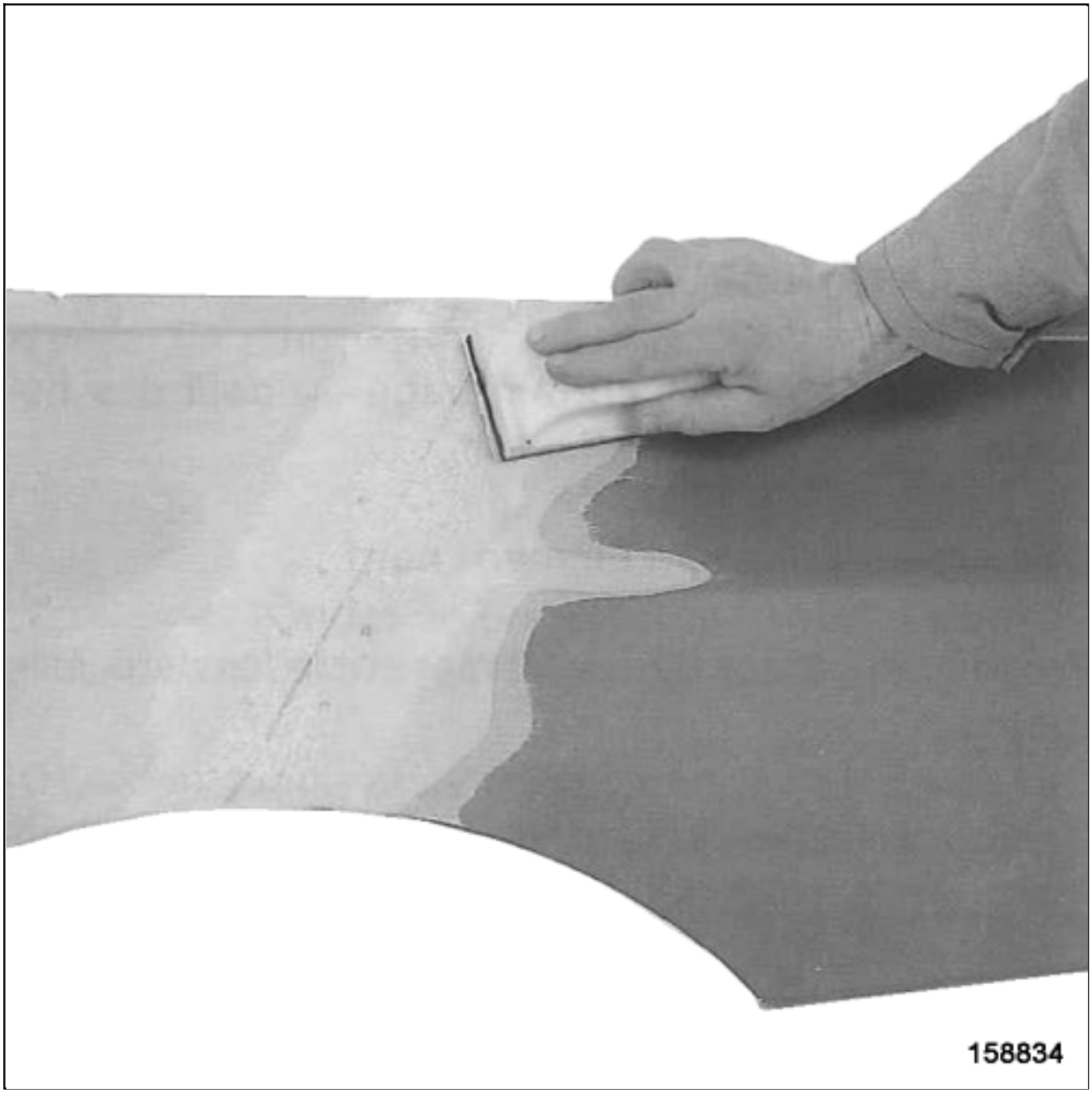

- Sand using the orbital sander with a P 80then with a P180and P240.

- Apply if necessary a finishing mastic(see product technical sheet). (see **Vehicle: Parts and consumables for the repair**)

- Sand the finishing masticusing a P 150then finish using a P240.

XSL version : 3.02 du 22/07/11

REAR AXLE ASSEMBLY: EXPLODED VIEW

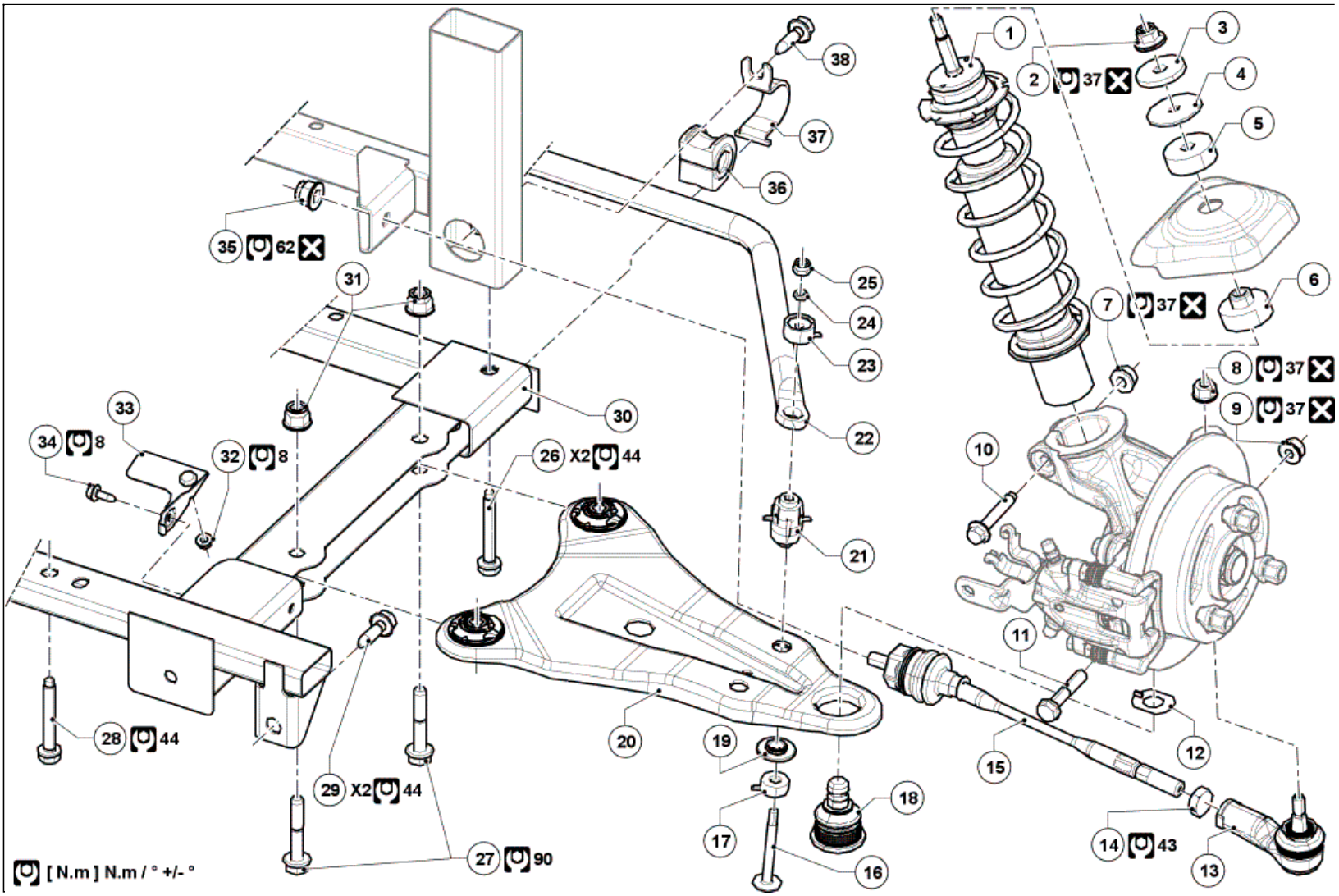

Illustration key: Description .

For fastenings with no specified tightening torque values, refer to the Table of Standard TorquesTightening torques: General information .

Marks	Designations	Informations
1	Filter unit	
2	Shock absorber nut on filter unit	
3	Shock absorber washer on filter unit	
4	Upper damper component washer	
5	Spring upper damper	
6	Spring lower damper	
7	Shock absorber base nut	
8	Transversal rear lower tie-rod end nut	
9	Lower arm ball joint nut	
10	Shock absorber base bolt	
11	Lower arm ball joint bolt	
12	Lower arm ball joint protector	
13	Transversal rear lower tie-rod end	
14	Transversal rear lower tie-rod nut	
15	Transversal rear lower tie-rod	
16	Anti-roll bar tie-rod bolt	
17	Anti-roll bar tie-rod	
18	Lower arm ball joint	
19	Anti-roll bar tie-rod washer	
20	Lower arm	Ball-joint uncoupling tool : Use
21	Anti-roll bar tie-rod	
22	Anti-roll bar	
23	Anti-roll bar tie-rod	
24	Anti-roll bar tie-rod washer	
25	Anti-roll bar tie-rod nut	
26	Rear axle subframe front bolts	
27	Lower arm bolts	
28	Rear axle subframe rear bolts	
29	Rear axle subframe rear bolts	
30	Rear axle subframe	(see 33A, Rear axle components, Rear axle subframe: Removal - Refitting)

31	Lower arm nuts	
32	Wiring between converter and traction battery mounting nut	
33	Wiring between converter and traction battery support	
34	Wiring between converter and traction battery support bolt	
35	Transversal rear lower tie-rod nut on body	
36	Anti-roll bar bearing	
37	Anti-roll bar bracket	
38	Anti-roll bar bearing bolt	

REAR AXLE SUBFRAME: REMOVAL - REFITTING

Note, one or more warnings are present in this procedure

Equipment required
safety strap(s)

WARNING

To avoid all risk of damage to the systems, apply the safety and cleanliness instructions and operation recommendations before carrying out any repair:

Vehicle: Precautions for the repair .

Location and specifications (tightening torques, parts always to be replaced, etc.)(see 33A, Rear axle components, Rear axle assembly: Exploded view) .

REMOVAL

1. REMOVAL PREPARATION OPERATION

Position the vehicle on a two-post lifVehicle: Towing and lifting .

WARNING

DANGER: HIGH VOLTAGE VEHICLE.

Risks of serious burns or electric shock that may prove fatal.

Before carrying out any work on the vehicle, it is essential that you adhere to the instructions regarding vehicle voltage cut-off. This work must be carried out by an employee who is qualified and authorized to work on a high-voltage onboard network Vehicle: Precautions for the repair .

- Lockout the vehicle Vehicle: Lockout - Removal of lockout .

- Remove:
  - the traction battery Traction battery assembly: Removal - Refitting ,
  - the rear wheels Wheel: Removal - Refitting ,
  - the rear bumper trim Exterior body rear trim assembly: Exploded view ,
  - the rear driveshaft hub carrier assembly (see 33A, Rear axle components, Rear hub carrier assembly: Exploded view) ,
  - the rear anti-roll bar (see 33A, Rear axle components, Rear axle assembly: Exploded view) .
  - the rear lower arms (see 33A, Rear axle components, Rear axle assembly: Exploded view) ,

- Attach the electric traction motor-reduction gearing assembly to the body with a safety strap(s).

- Remove Engine-gearbox unit support assembly: Exploded view :
  - the left-hand suspended engine mounting support,
  - the front suspended engine mounting support.

2. REMOVAL OPERATION

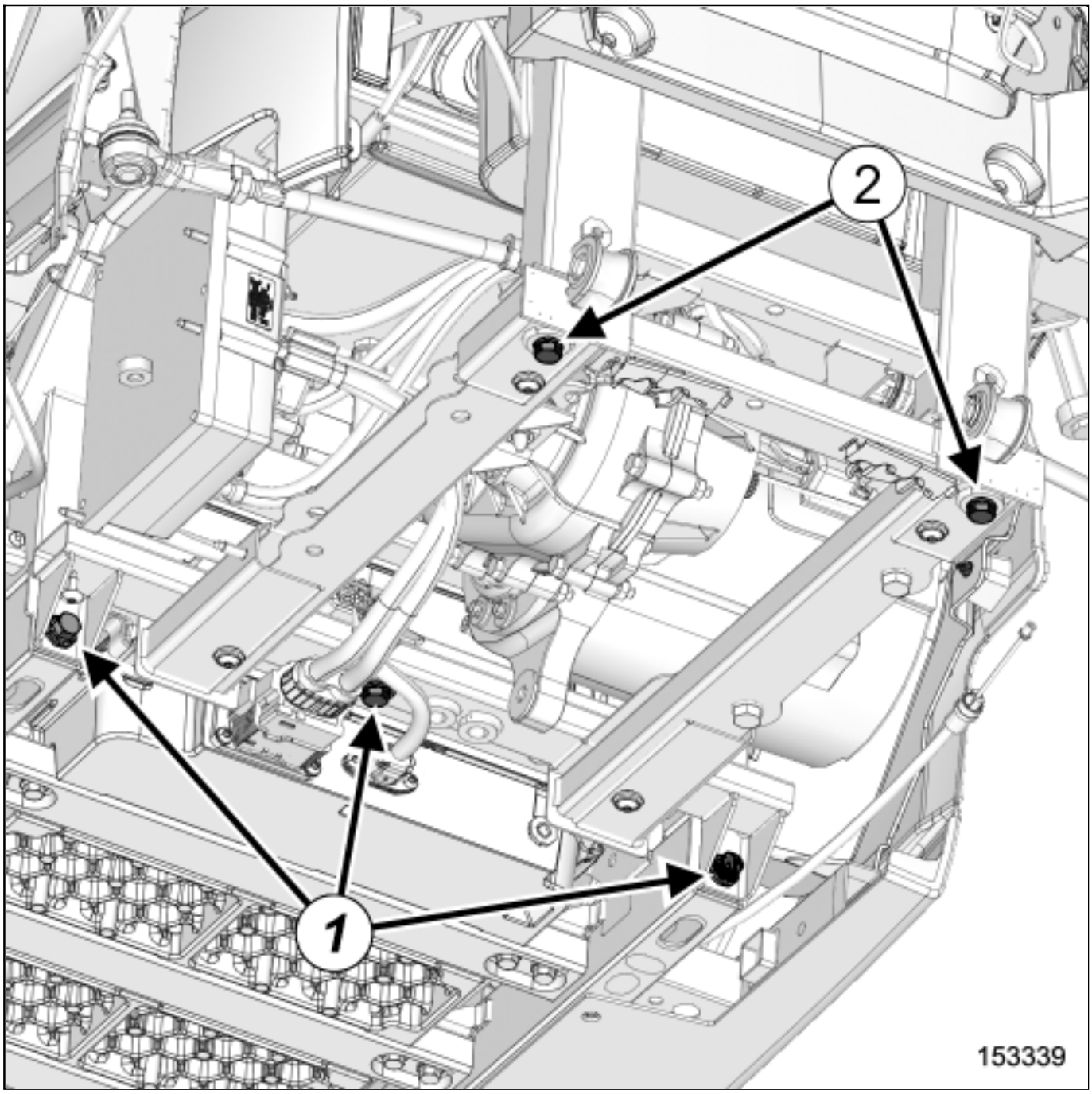

Remove (see 33A, Rear axle components, Rear axle assembly: Exploded view) :

- the rear axle subframe front bolts(1) ,
- the rear axle subframe rear bolts(2) ,
- the rear axle subframe.

REFITTING

1. REFITTING OPERATION

- Proceed in the reverse order to removal.

2. FINAL OPERATION

- Remove the lockout of the vehicle**Vehicle: Lockout - Removal of lockout** .
- Control and adjust the rear axle assembly**Rear axle system: Adjustment** .

Repair-13x02x05x01-01x37-1-5-1.xml

XSL version : 3.02 du 22/07/11

REARAXLESYSTEM:ADJUSTMENT

Equipment required
flywheel immobiliser

1. PREPARATION FOR ADJUSTMENT

- Check the geometry(see 30A, General information, Axle assemblies: Check) .

2. ADJUSTMENT OPERATION

1- WHEEL ALIGNMENT

- Set the wheels straight ahead.
- Lock the steering wheel using a flywheel immobiliser.
- Loosen the transversal rear lower tie-rod nutsRear axle assembly: Exploded view .
- Turn the transversal rear lower tie-rods to the required valueRear axle assembly: Exploded view .
- After adjustment, torque tighten the transversal rear lower tie-rod nutsRear axle assembly: Exploded view .

2- CASTOR ANGLE

- Not adjustable.

3- CAMBER

- Not adjustable.

4-PIVOT

- Not adjustable.

XSL version : 3.02 du 22/07/11

REAR AXLE

Note, one or more warnings are present in this procedure

1. WHEEL ALIGNMENT: MEANING OF SYMBOLS

CAUTION

- Symbols used by RENAULT:
  - toe-out: -
  - toe-in: +

2. WHEEL ALIGNMENT

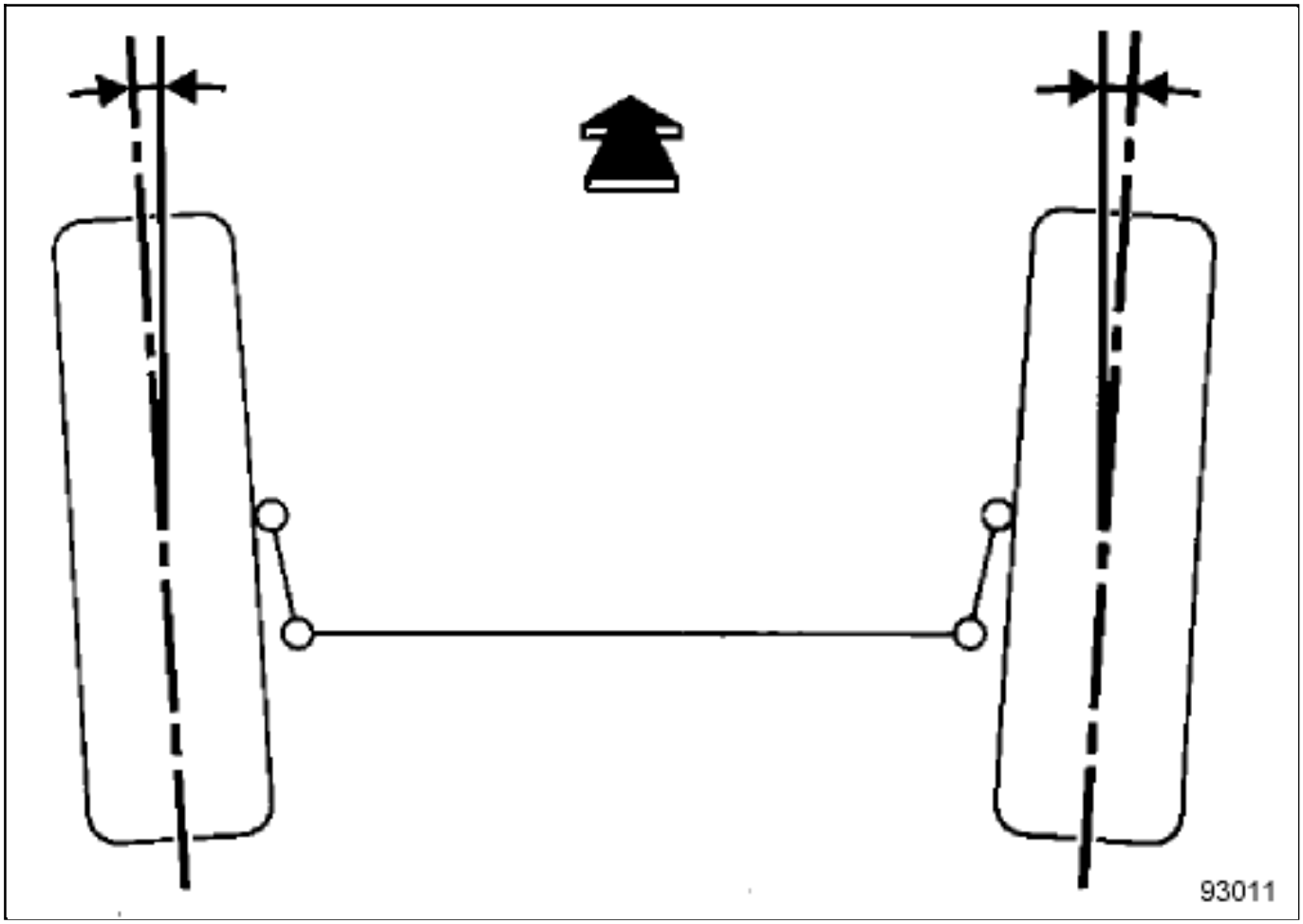

Value (for both wheels)	Tolerance	Position of vehicle
0˚	+1˚	Vehicle in running order
	-1˚	

3. CAMBER

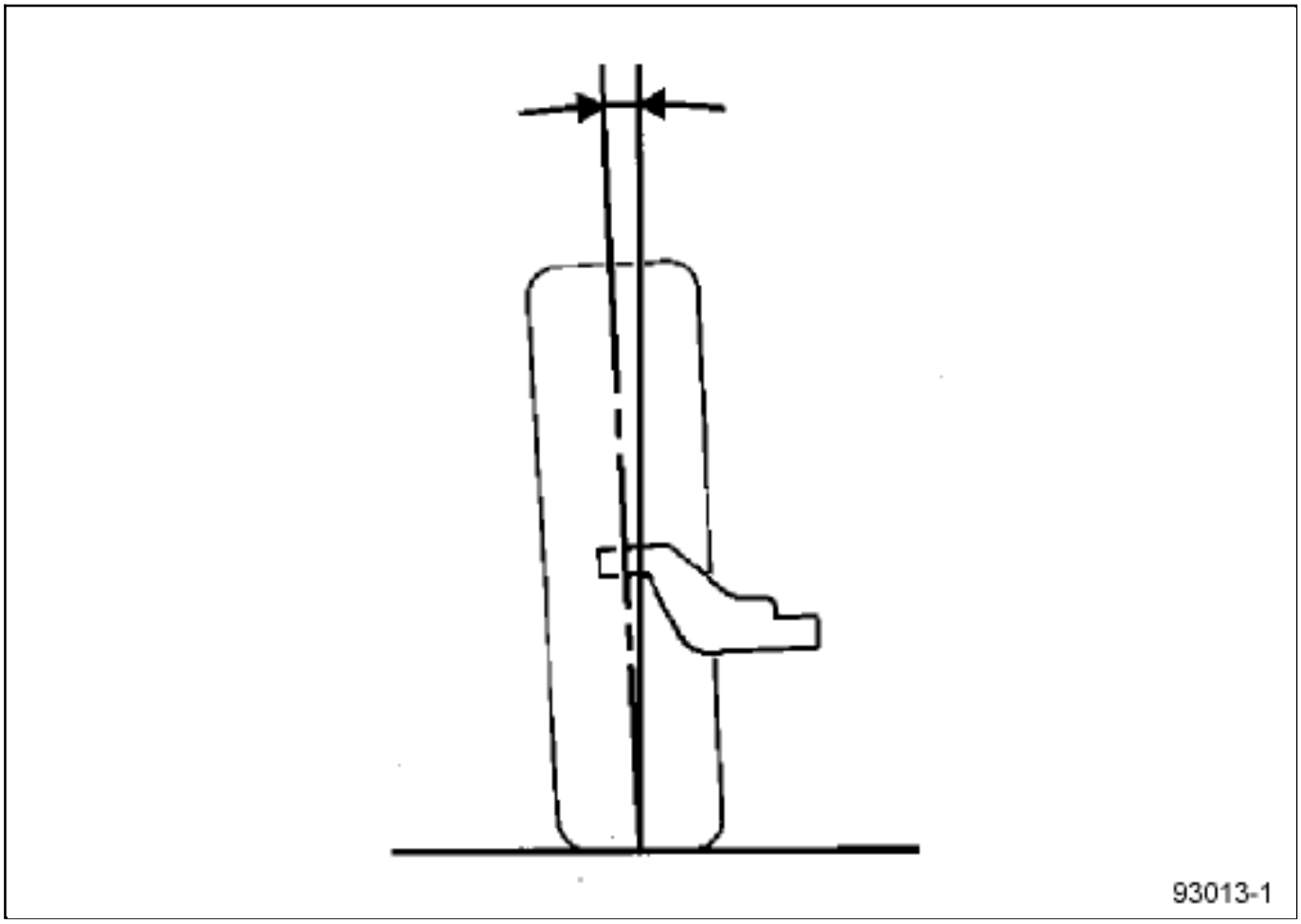

Value	Tolerance	Position of vehicle
-0.375°	+1°	Vehicle in running order
	-1°	

Repair-13x02x05-02x13-6-34-1.xml

XSL version : 3.02 du 22/07/11

REAR BRAKE CALLIPER ASSEMBLY: EXPLODED VIEW

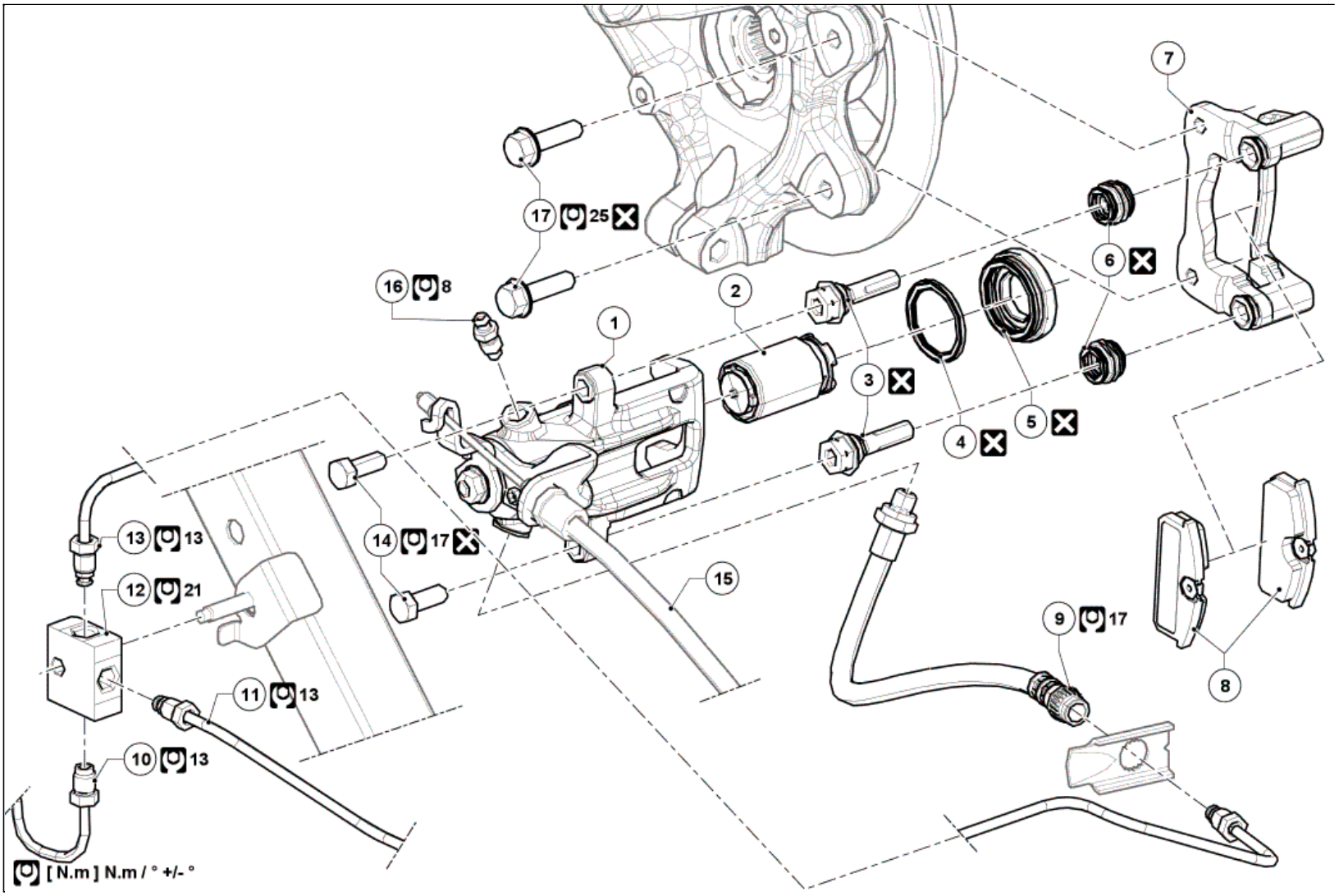

Illustration key: Description .

For fastenings with no specified tightening torque values, refer to the Table of Standard TorquesTightening torques: General information .

Marks	Designations	Informations
1	Rear brake calliper	
2	Rear brake calliper piston	
3	Rear brake calliper guide pins	
4	Rear brake calliper piston seal	
5	Dust seal of rear brake calliper piston	
6	Rear brake calliper guide pin gaters	
7	Rear brake calliper mounting	
8	Brake pads	
9	Brake hose	
10	Rigid brake pipe between manifold and rear right-hand brake hose	(see 33A, Rear axle components, Rigid brake pipe: Removal - Refitting)
11	Rear rigid brake pipe at brake compensator outlet	(see 33A, Rear axle components, Rigid brake pipe: Removal - Refitting)
12	Manifold	
13	Rigid brake pipe between manifold and rear left-hand brake hose	(see 33A, Rear axle components, Rigid brake pipe: Removal - Refitting)
14	Rear brake calliper bolts	
15	Handbrake cable	Parking brake cables: Removal - Refitting
16	Rear brake calliper bleed screw	
17	Rear brake calliper mounting bolts	

REAR BRAKE CALLIPER: REPAIR

Note, one or more warnings are present in this procedure

WARNING

To avoid all risk of damage to the systems, apply the safety and cleanliness instructions and operation recommendations before carrying out any repair:

- Brake circuit: Precautions for the repair
- Vehicle: Precautions for the repair .

CAUTION

Prepare for the flow of fluid, and protect the surrounding components.

Location and specifications (tightening torques, parts always to be replaced, etc.):(see 33A, Rear axle components, Rear brake calliper assembly: Exploded view) .

REMOVAL

1. REMOVAL PREPARATION OPERATION

Position the vehicle on a two-post lift Vehicle: Towing and lifting .

Release the parking brake.

Remove:

- the rear wheel Wheel: Removal - Refitting ,

- the rear brake calliper (see 33A, Rear axle components, Rear brake calliper assembly: Exploded view) .

2. REMOVAL OPERATION

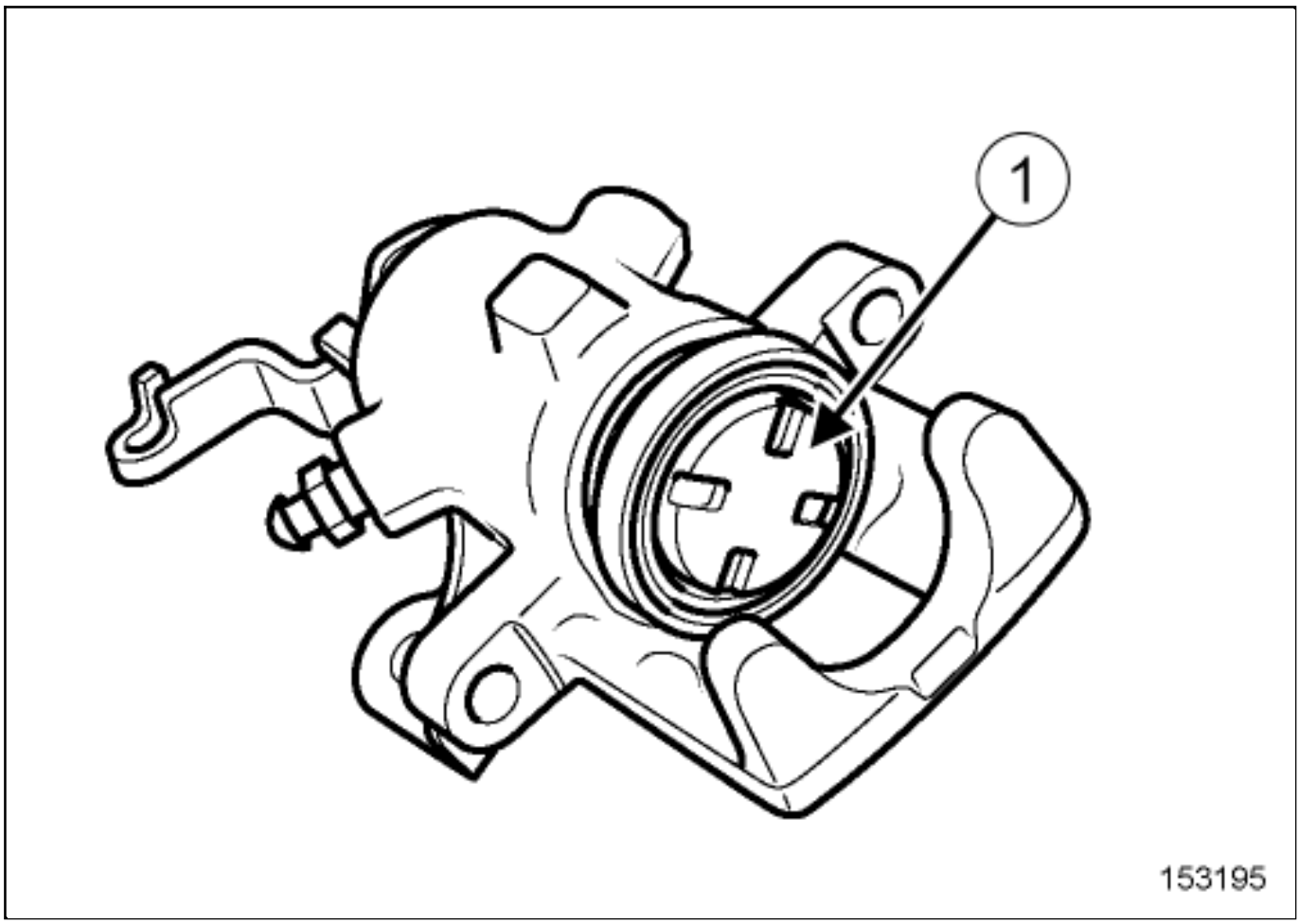

- Turn the end(1) of the calliper piston anti-clockwise as far as it will go.

- Remove (see 33A, Rear axle components, Rear brake calliper assembly: Exploded view) :
  - the brake calliper piston,
  - the dust seal.

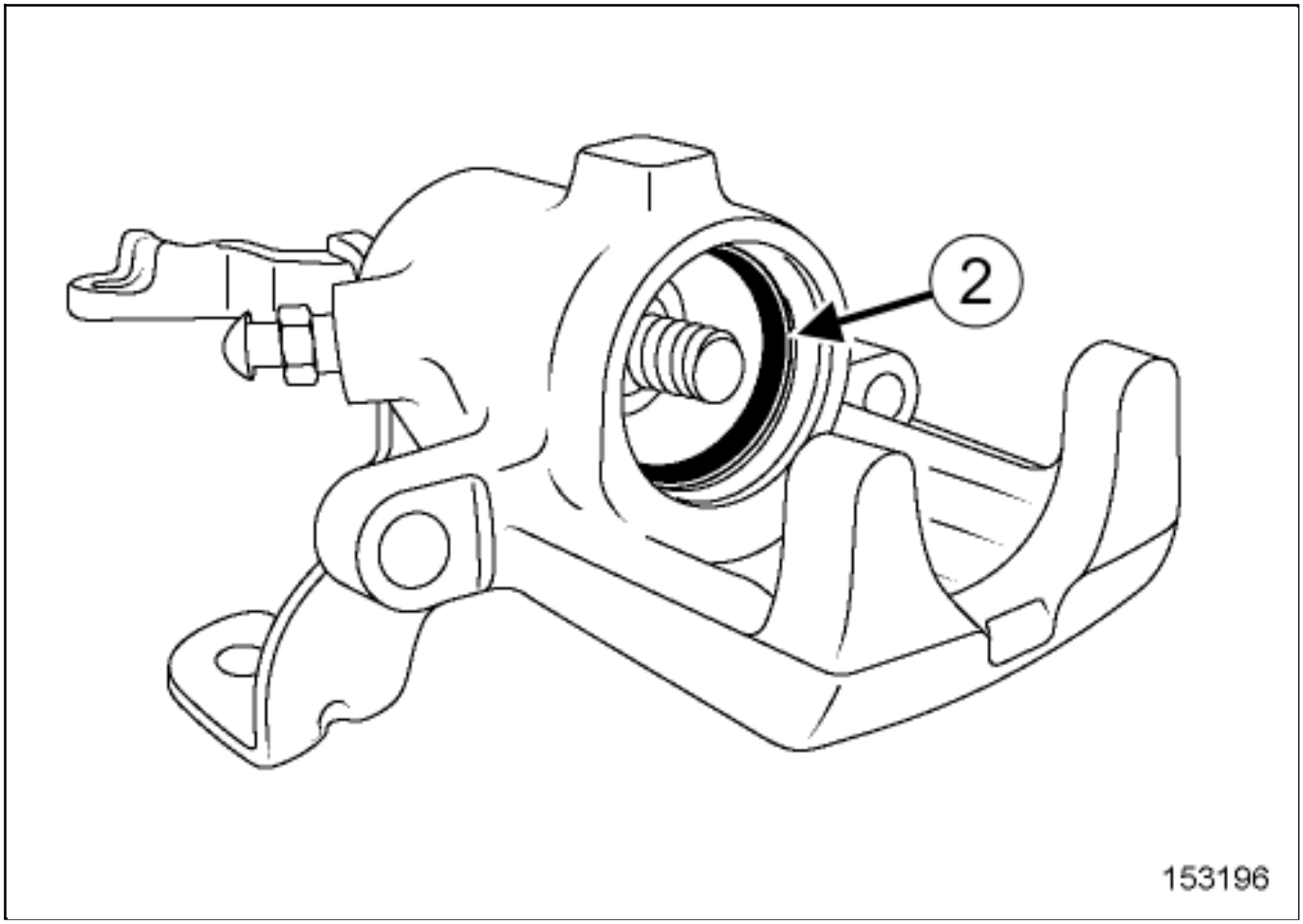

Remove the rectangular section seal(2) from the calliper groove.

REFITTING

1. REFITTING PREPARATION OPERATION

Replace the complete calliper in if there is:

- a scratch in the calliper bore,
- a scratch or crack on the calliper piston.

Clean using a wire brush and BRAKE CLEANERVehicle: Parts and consumables for the repair :

- the calliper mounting,
- the brake calliper.

Mount the brake calliper piston with the grease content in the repair kit.

2. REFITTING OPERATION

Refit the rectangular section seal into the calliper groove.

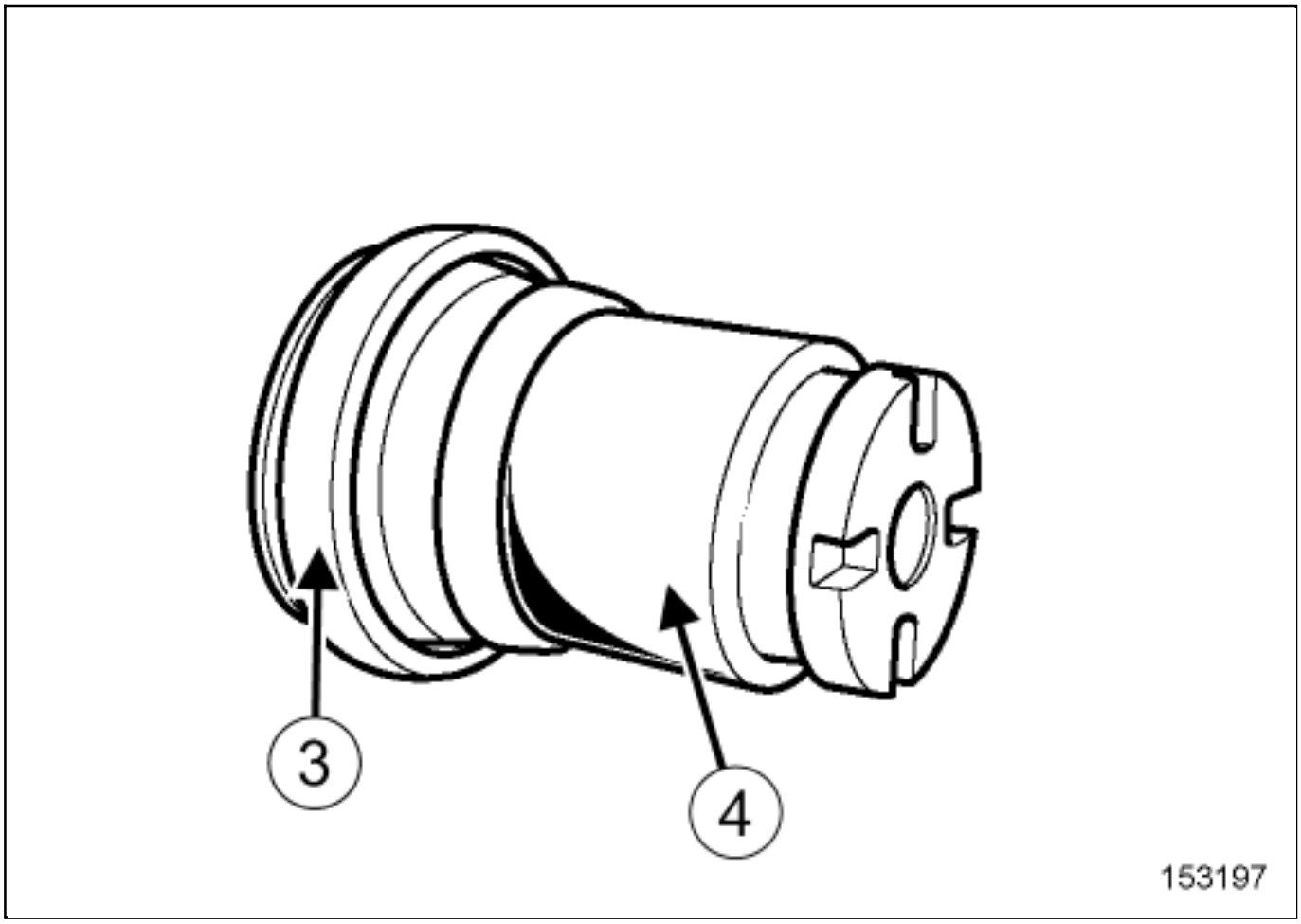

Grease the brake calliper piston.

Note:

Use the grease content in the repair kit.

- Refit the dust seal(3) on the brake calliper piston(4) .

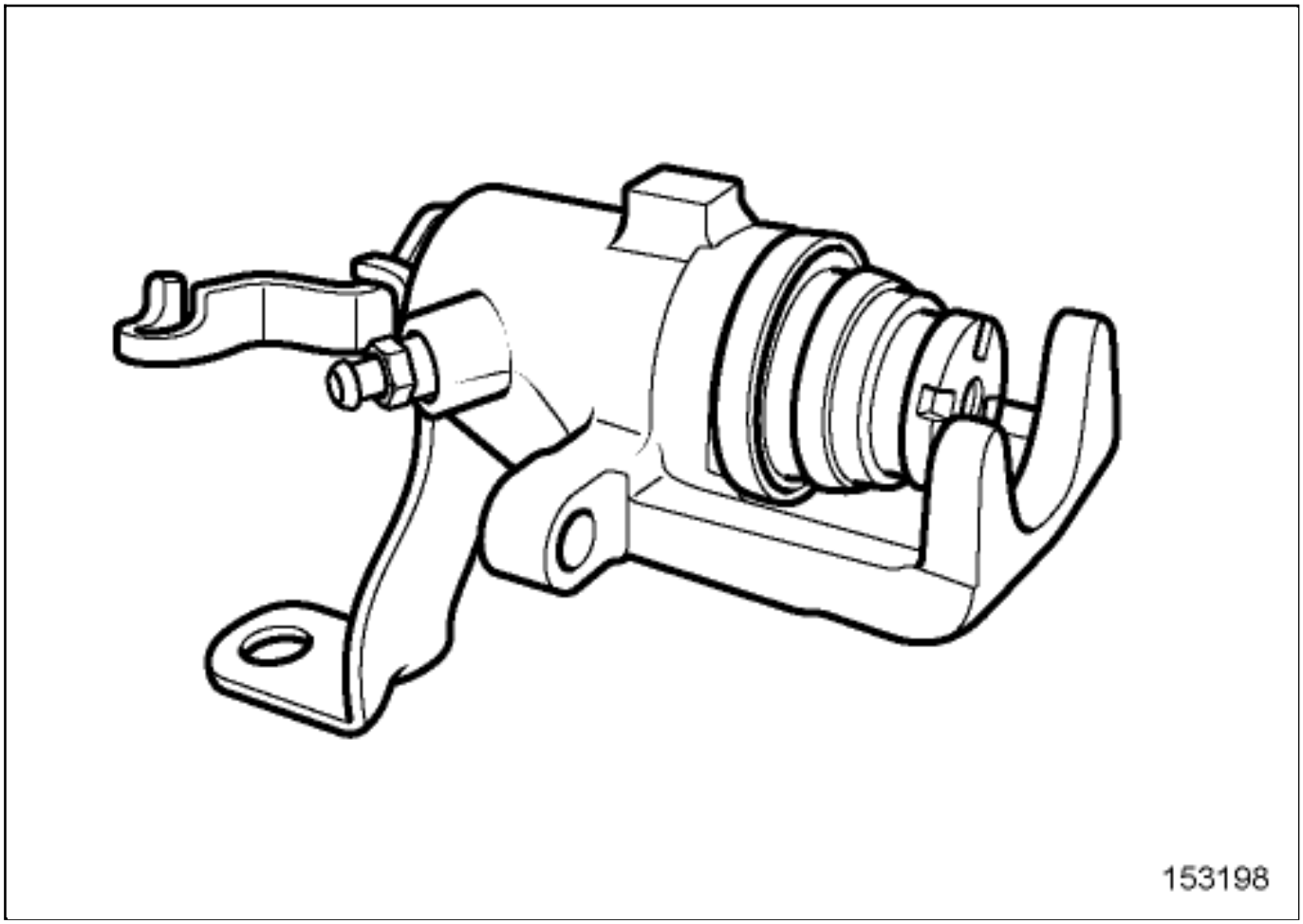

- Refit the "dust seal - brake calliper piston" assembly.
- Clip the dust seal on the brake calliper.
- Turn the brake calliper piston clockwise for refitting.

CAUTION

After any operation requiring removal of the parking brake cables from the callipers, it is essential to check that the parking brake system is operating correctly by applying the lever several times. If this fails to apply the parking brake, position the cables correctly in the brake compensator.

3. FINAL OPERATION

- Proceed in reverse order to removal.

- Fill up and bleed the brake circuitBraking circuit: Bleed .

WARNING

To avoid any accident, bring the pistons, brake pads and brake discs into contact by depressing the brake pad several times.

REAR CENTRE SEAT BELT: REMOVAL - REFITTING

Note, one or more warnings are present in this procedure

WARNING

To avoid all risk of damage to the systems, apply the safety and cleanliness instructions and operation recommendations before carrying out any repair:

Vehicle: Precautions for the repair .

REMOVAL

1. REMOVAL PREPARATION OPERATION

Position the vehicle on a two-post lift Vehicle: Towing and lifting .

Position the front seat towards the front.

Remove:

- the B-pillar trims Exterior body side trim assembly: Exploded view ,
- the rear bumper trim Exterior body rear trim assembly: Exploded view ,
- the roof rear section Exterior body rear trim assembly: Exploded view ,
- the rear bumper upper strip trim Exterior body rear trim assembly: Exploded view ,
- the rear seatback trim,

- the rear headlining Interior body side trim assembly: Exploded view ,
- the rear left-hand side panel trim Interior body side trim assembly: Exploded view .

2. REMOVAL OPERATION

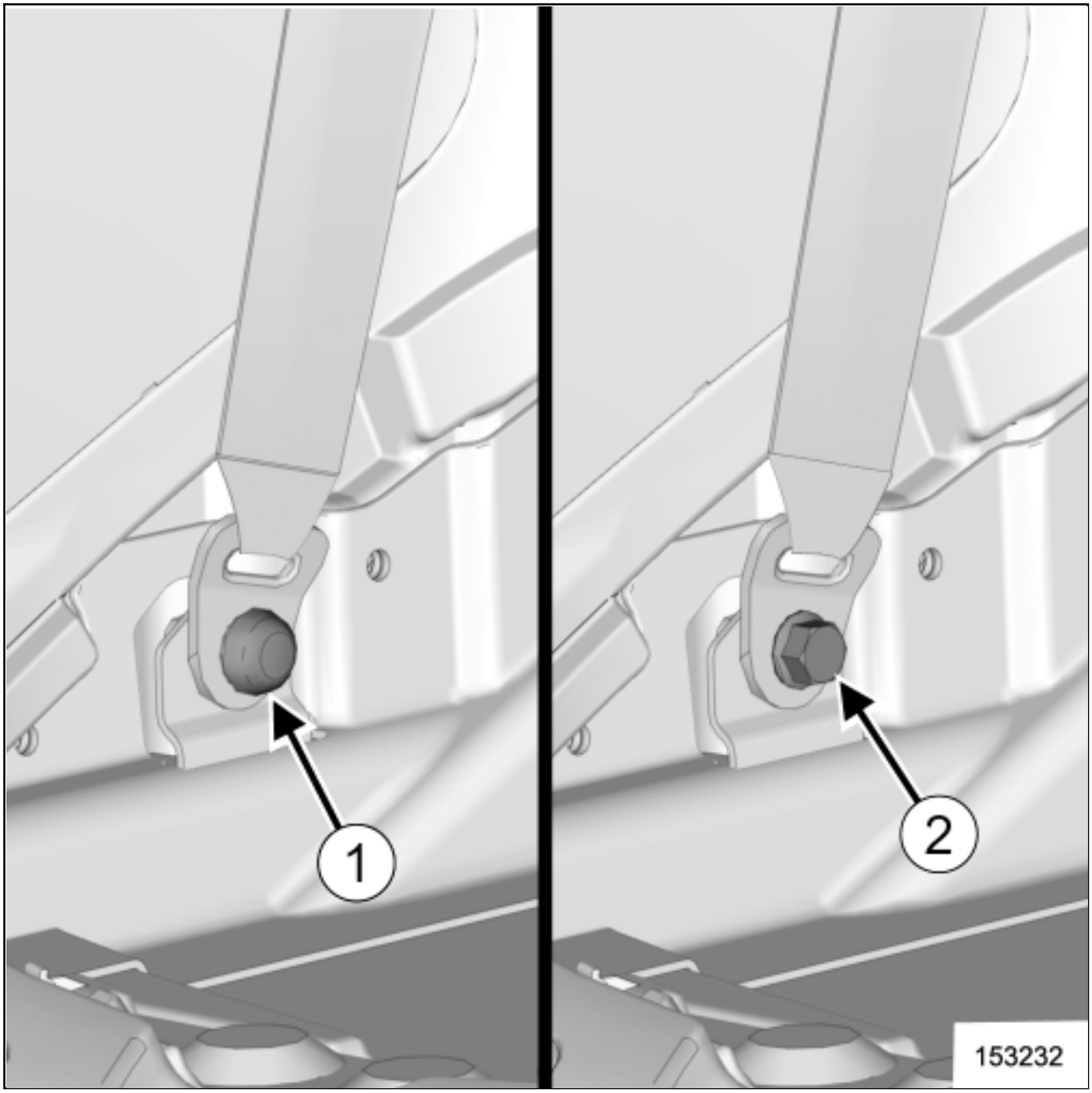

Remove:

- the cover(1) of the seat belt lower bolt,

the seat belt lower bolt(2) ,

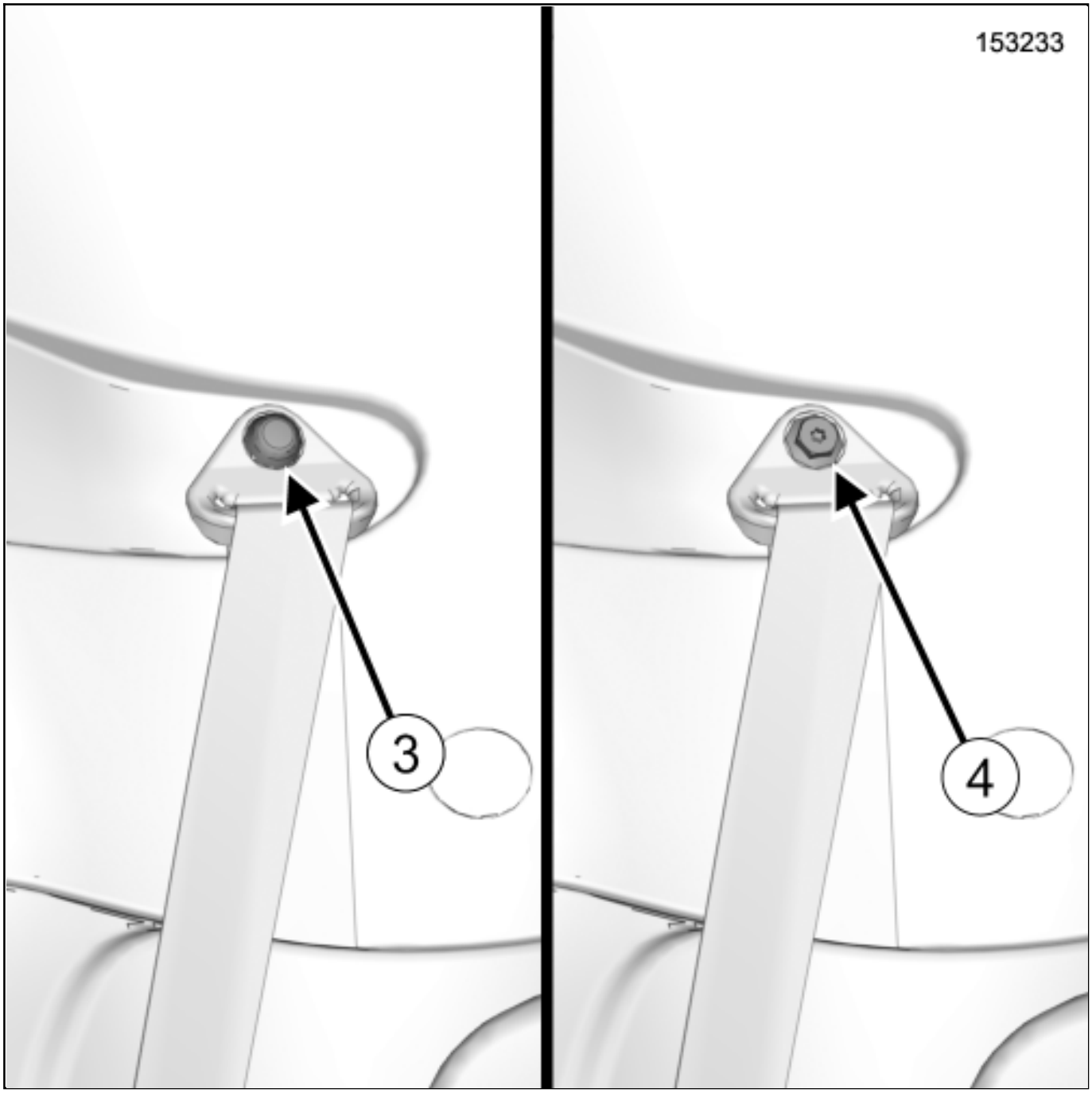

Remove:

- the cover(3) of the seat belt upper bolt,
- the seat belt upper bolt(4) ,
- the rear centre inertia reel seat belt bolt,

- the rear centre seat belt.

REFITTING

1. REFITTING OPERATION

- Proceed in the reverse order to removal.

- Torque tighten:
  - the seat belt lower bolt21 N.m,
  - the seat belt upper bolt21 N.m,
  - the rear centre inertia reel seat belt bolt21 N.m.

Repair-31x02x01x26-01x37-1-15-1.xml

XSL version : 3.02 du 22/07/11

REAR END LOWER CROSS MEMBER: REPLACEMENT

Note, one or more warnings are present in this procedure

WARNING

DANGER: HIGH VOLTAGE VEHICLE.

Risks of serious burns or electric shock that may prove fatal.

Before carrying out any work on the vehicle, it is essential that you adhere to the instructions regarding vehicle voltage cut-off. This work must be carried out by an employee who is qualified and authorized to work on a high-voltage onboard network Vehicle: Precautions for the repair .

1. COMPOSITION OF THE SPARE PART

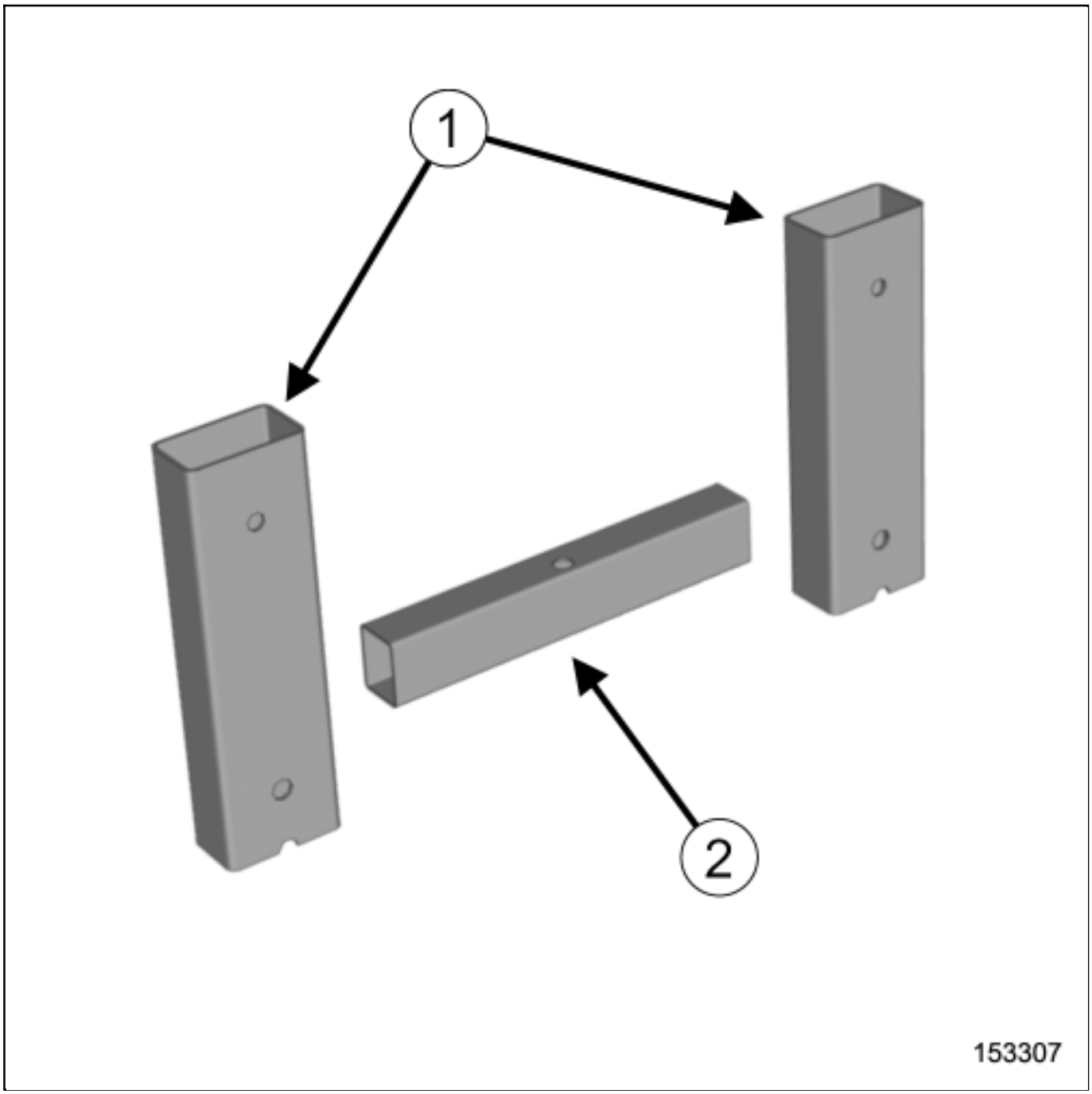

No.	Description	Type	Thickness (mm)
(1)	Rear sub-frame rear exterior support	TSE	1.5
(2)	Rear cross member	TSE	2

Note:

The stud will be ordered in addition, it is not included in the replacement part.

2. IN THE EVENT OF REPLACEMENT

The option for replacing the part is as follows :

complete replacement.

CAUTION

If the mating faces of the parts to be welded are not accessible, make EGW plug welds to replace the original resistance welds (see MR 400).

1- POSITION OF ELECTRIC EARTHS

CAUTION

To avoid damaging the vehicles electric and electronic components, the earths of any wiring harness near the weld area must be disconnected.

Position the earth of the welding machine as close as possible to the weld area (see MR 400).

Locate the earths located near to the weld areaEarths on body: List and location of components .

2- COMPLETE REPLACEMENT

Note:

The repair bench does not have to be used, on condition that the side members have not been affected by the impact.

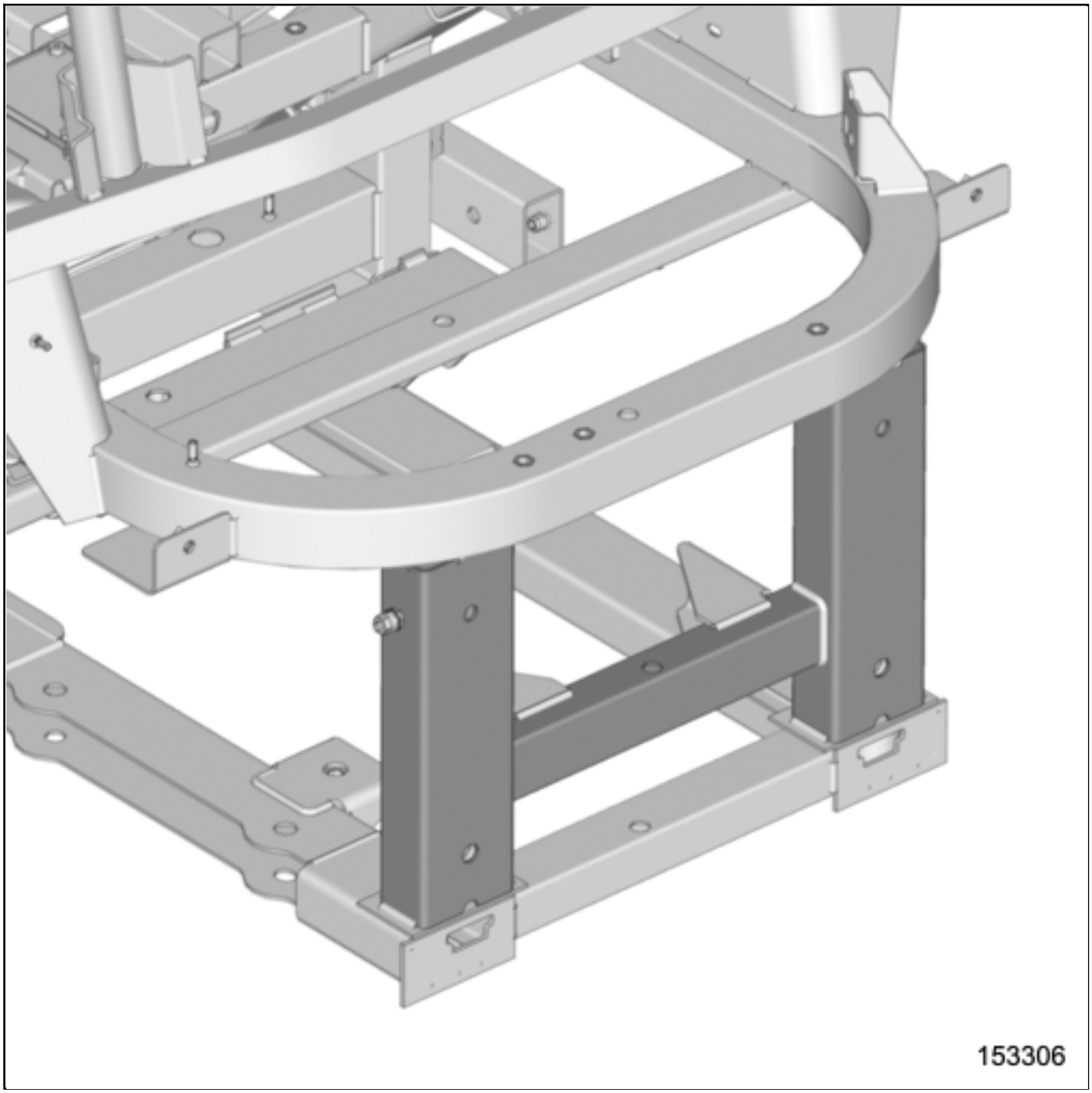

Repair-40x05x12-02x49-1-2-1.xml

XSL version : 3.02 du 22/07/11

REAR HUB CARRIER ASSEMBLY: EXPLODED VIEW

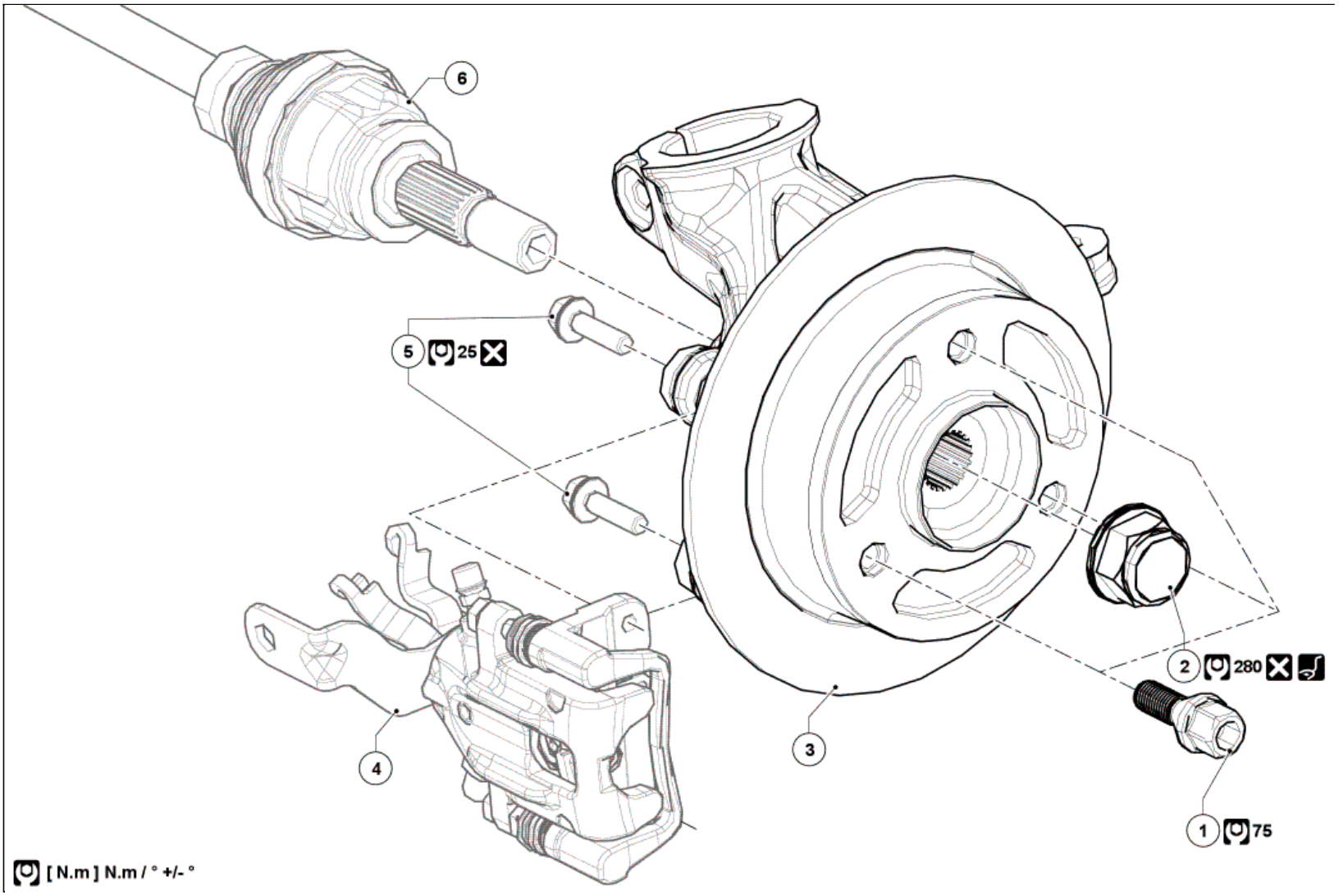

Illustration key: Description .

Marks	Designations	Informations
1	Rear wheel bolts	
2	Driveshaft nut	(Rou. 604-01)
3	Rear brake disc and driveshaft hub carrier	(see 33A, Rear axle components, Rear stub axle carrier: Removal - Refitting)
4	Rear brake calliper	(see 33A, Rear axle components, Rear brake calliper assembly: Exploded view)
5	Rear brake calliper mounting bolts	
6	Driveshaft	Driveshaft assembly: Exploded view

Repair-13x02x05x24-02x50-1-3-1.xml

XSL version : 3.02 du 22/07/11

REAR LIGHT BULB: REMOVAL - REFITTING

Note, one or more warnings are present in this procedure

WARNING

To avoid all risk of damage to the systems, apply the safety and cleanliness instructions and operation recommendations before carrying out any repair:

Vehicle: Precautions for the repair .

Location and specification (tightening torques, parts always to be replaced, etc.)(see 81A, Rear lighting, Rear signals - lighting assembly: Exploded view) .

REMOVAL

1. REMOVAL PREPARATION OPERATION

1- CENTRE LIGHT BULBS

Remove the centre light mounting stoppersInterior body side trim assembly: Exploded view .

Remove (see 81A, Rear lighting, Rear signals - lighting assembly: Exploded view) :

- the centre light screws,
- the centre light.

Disconnect the connectors.

2- DIRECTION INDICATOR LIGHT BULBS

Remove the rear bumper trim Exterior body rear trim assembly: Exploded view .

Remove the direction indicator light (see 81A, Rear lighting, Rear signals - lighting assembly: Exploded view) .

2. REMOVAL OPERATION

1- CENTRE LIGHT BULBS

Remove (see 81A, Rear lighting, Rear signals - lighting assembly: Exploded view) :

- the bulb holder by turning it a quarter of a turn clockwise,
- the bulb.

2- DIRECTION INDICATOR LIGHT BULBS

Remove (see 81A, Rear lighting, Rear signals - lighting assembly: Exploded view) :

- the bulb holder by turning it a quarter of a turn clockwise,
- the bulb.

REFITTING

Proceed in the reverse order to removal.

REAR LIGHT ON BUMPER: REMOVAL - REFITTING

Note, one or more warnings are present in this procedure

Special tooling required	
Set of trim removal levers.	Car. 1363

WARNING

To avoid all risk of damage to the systems, apply the safety and cleanliness instructions and operation recommendations before carrying out any repair:

Vehicle: Precautions for the repair .

Location and specification (tightening torques, parts always to be replaced, etc.)(see 81A, Rear lighting, Rear signals - lighting assembly: Exploded view) .

REMOVAL

1. REMOVAL OPERATION

Unclip the reflector using the toolSet of trim removal levers.(Car. 1363) at the upper section of the reflector (see 81A, Rear lighting, Rear signals - lighting assembly: Exploded view) .

REFITTING

Proceed in reverse order to removal.

REAROPENINGELEMENT:ADJUSTMENT

Location and specifications (tightening torques, parts always to be replaced, etc.)(see **Rear opening element mechanism assembly: Exploded view**) .

ADJUSTMENT VALUES

- .

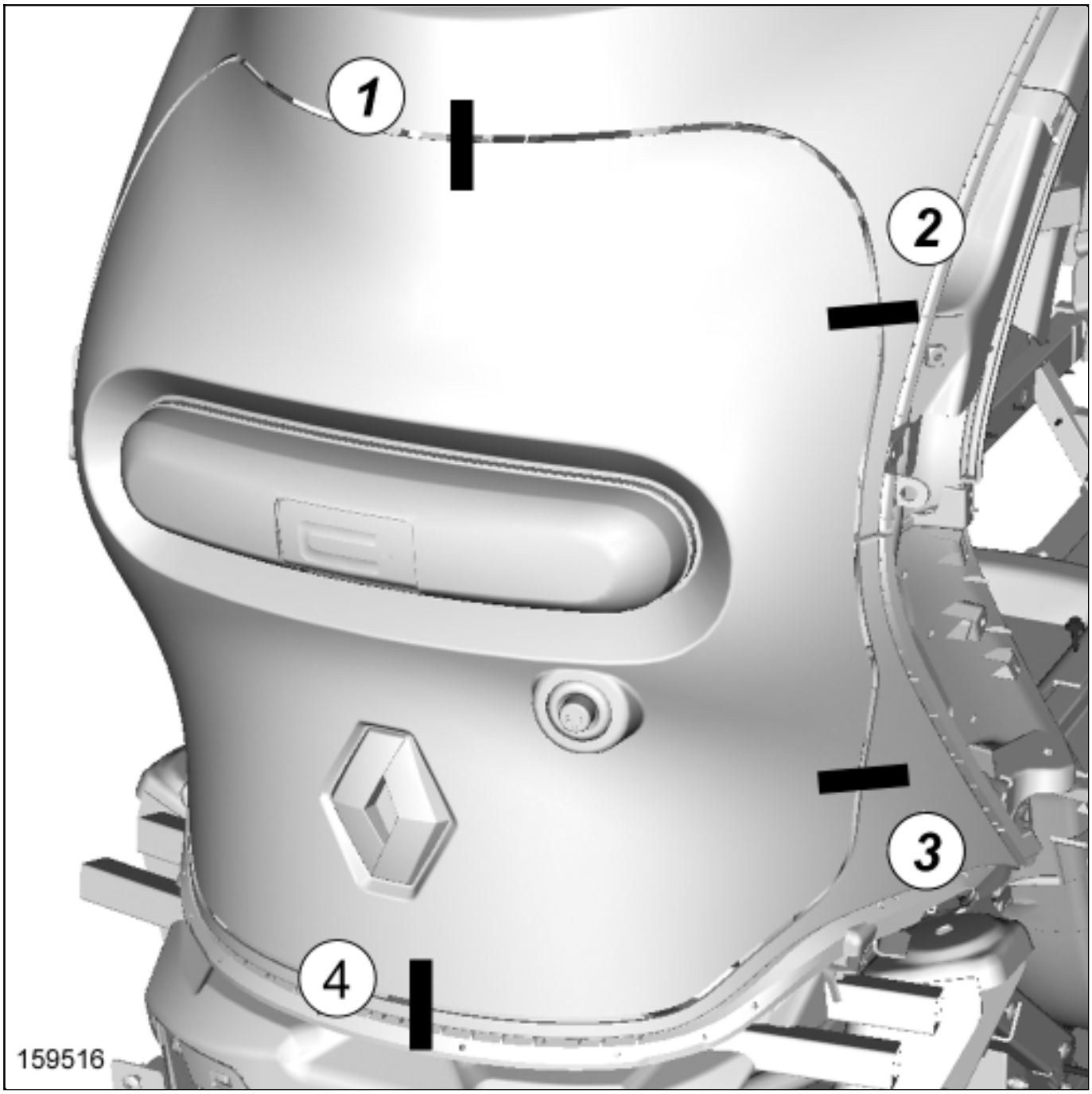

Observe the adjustment sequence(1) , (2) , (3) , (4) .

ADJUSTMENT

There are three options for adjusting the rear opening element:

- using the rear opening element hinge bolts,
- using the rear opening element hinge nuts,
- using the rear opening element striker plate.

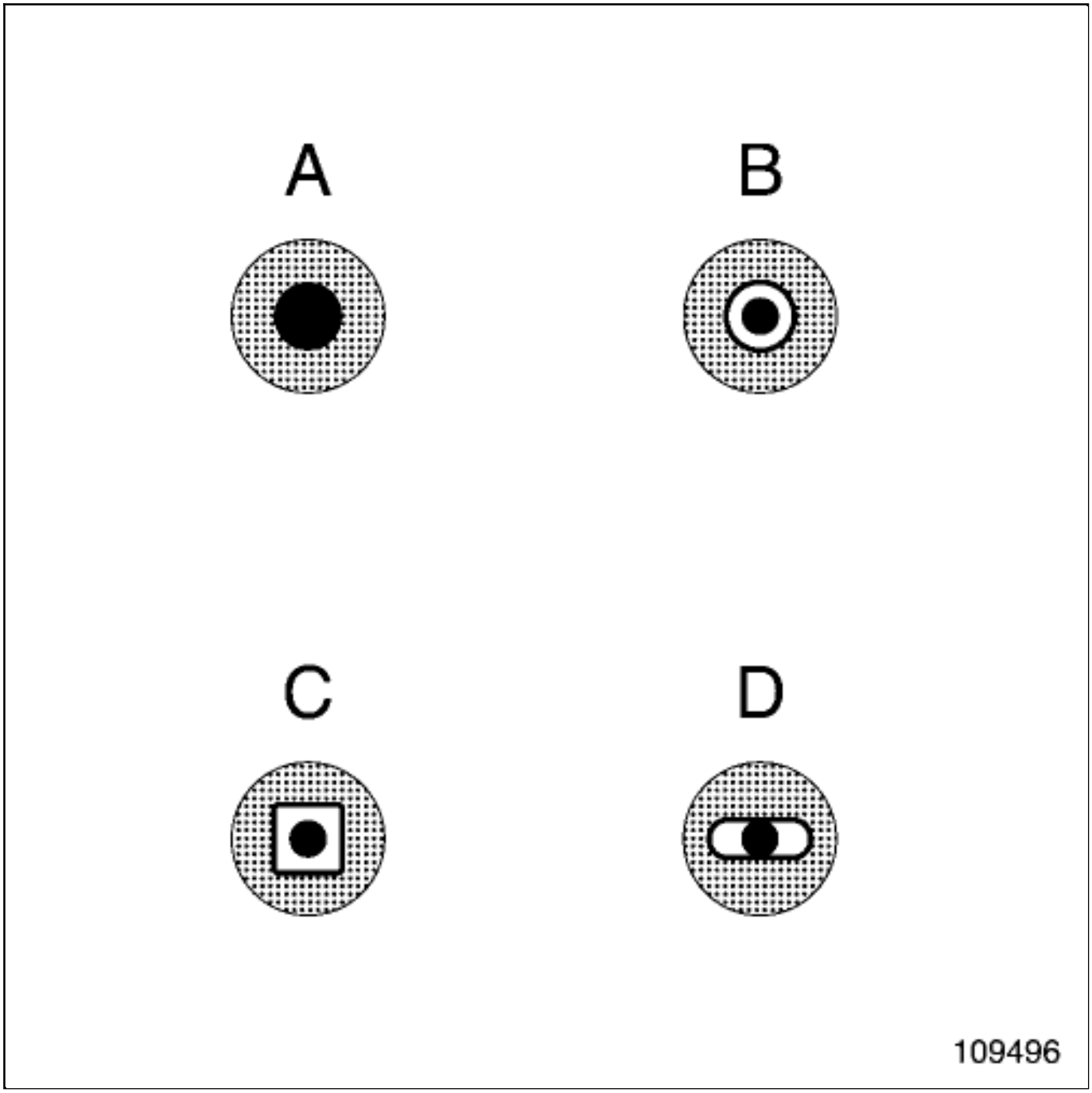

Symbols A, B, C and D show the adjustment options.

The black dot in the centre represents the body of the bolt.

The grey section represents the component to be adjusted.

The white section represents the adjustment area.

1. ADJUSTMENT USING THE REAR OPENING ELEMENT HINGE BOLTS

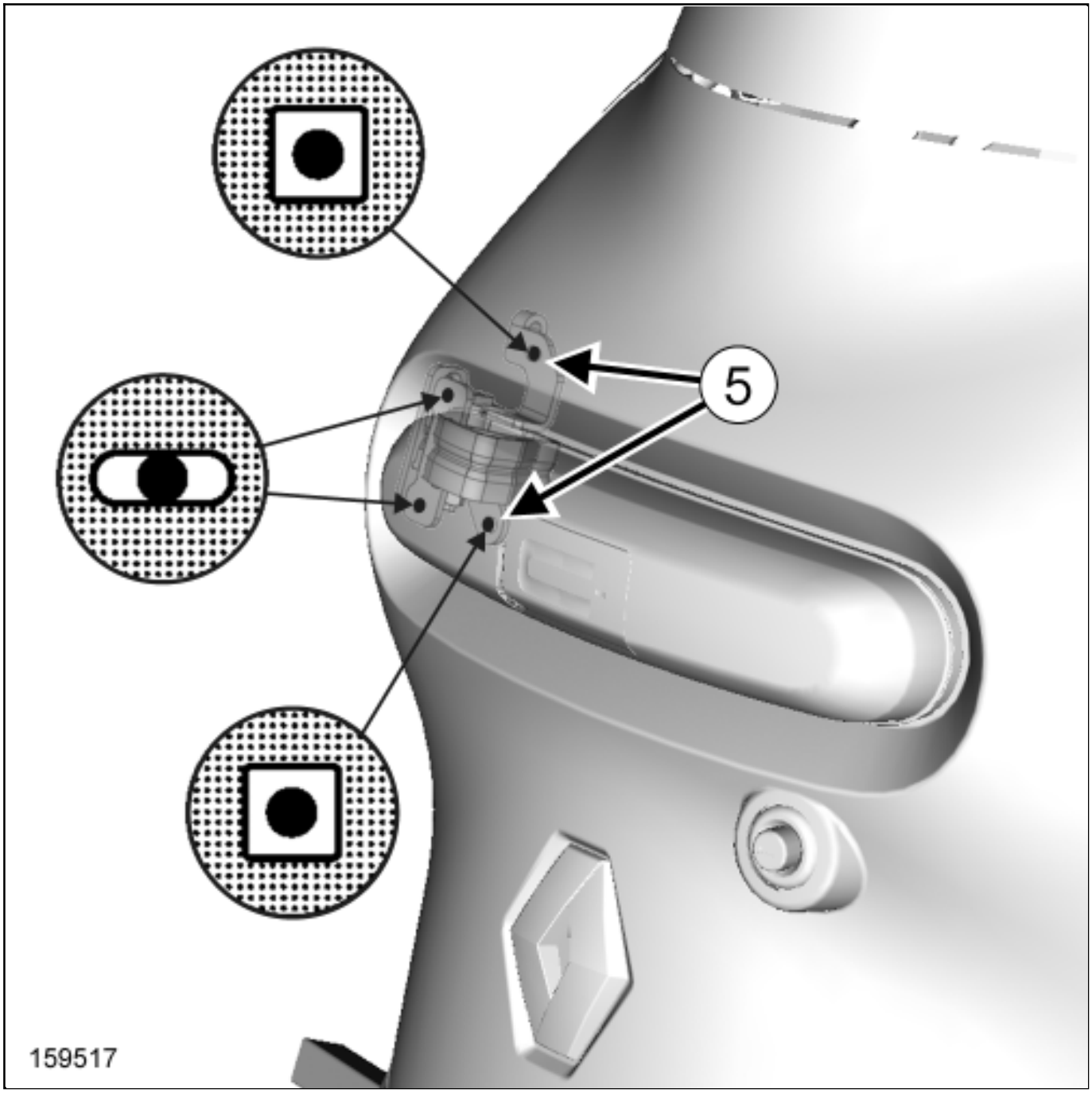

- Undo the hinge bolts(5) of the rear opening element.
- Adjust the rear opening element gaps.
- Torque tighten the hinge bolts(see **Rear opening element mechanism assembly: Exploded view**) .

2. ADJUSTMENT USING THE HINGE NUTS

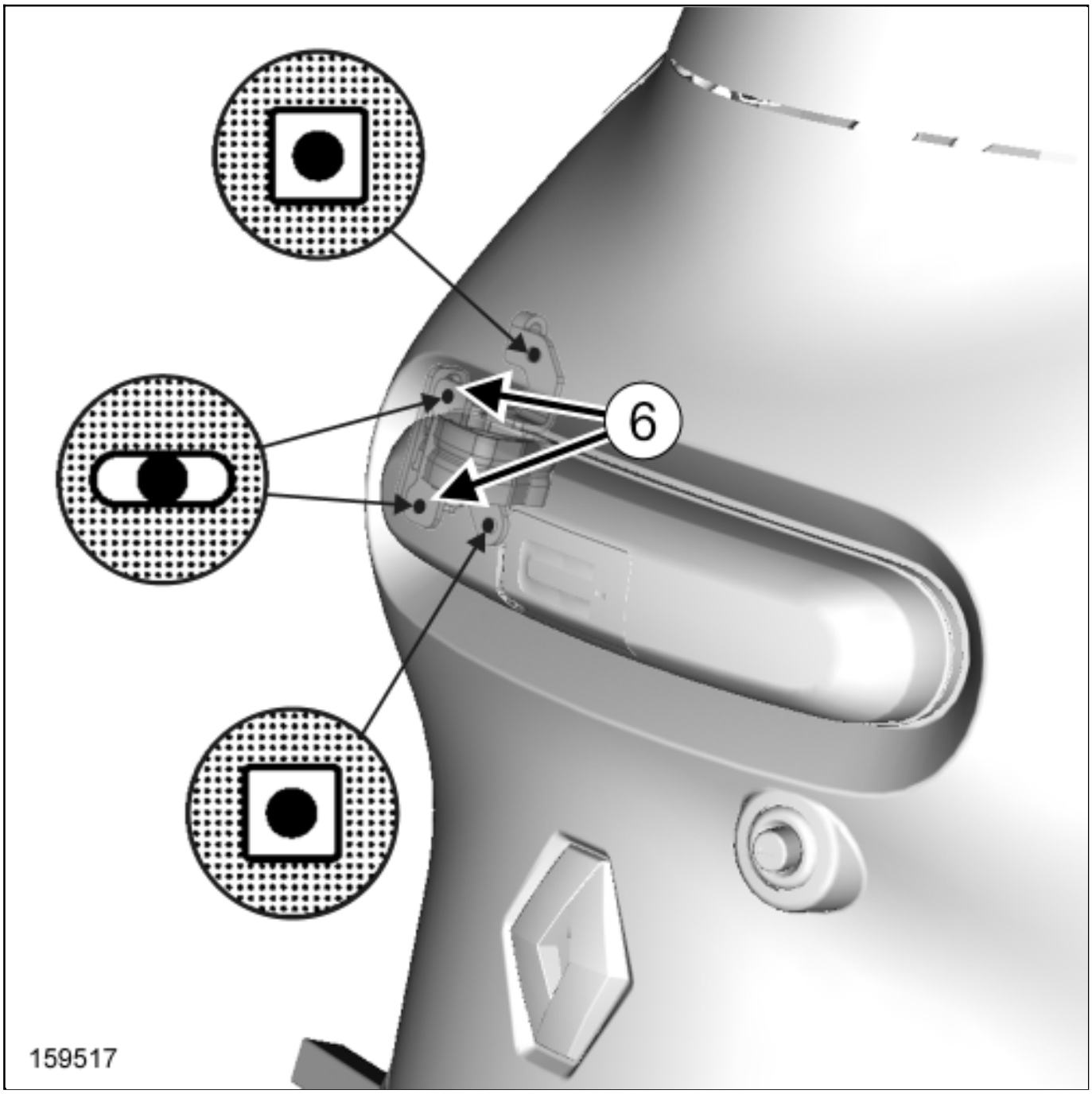

- Undo the hinge nut(6) of the rear opening element.
- Adjust the rear opening element gaps.
- Tighten the hinge nuts.

3. REAR OPENING ELEMENT STRIKER PLATE ADJUSTMENT

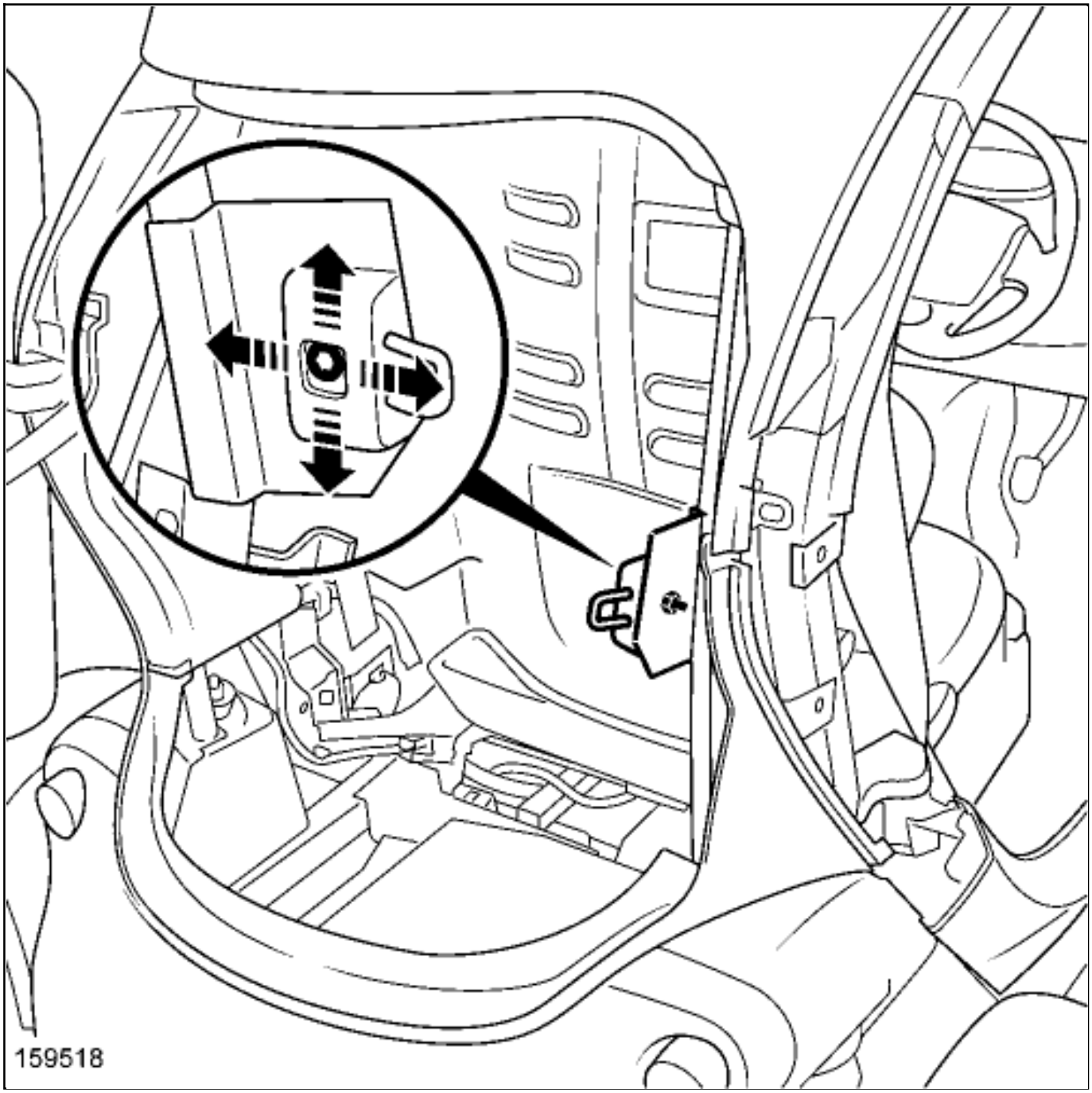

- Loosen the striker plate bolts.
- Adjust the rear opening element gaps.
- Tighten the striker plate bolts.

XSL version : 3.02 du 22/07/11

REAR SEAT BASE FRAME: REMOVAL - REFITTING

Note, one or more warnings are present in this procedure

parts always to be replaced:
2nd row rear seat frame rivet

WARNING

- To avoid all risk of damage to the systems, apply the safety and cleanliness instructions and operation recommendations before carrying out any repair:
  - Vehicle: Precautions for the repair .

REMOVAL

1. REMOVAL PREPARATION OPERATION

- Move the front seat forwards.
- Remove the rear seat base trimRear seat base trim: Removal - Refitting .

2. REMOVAL OPERATION

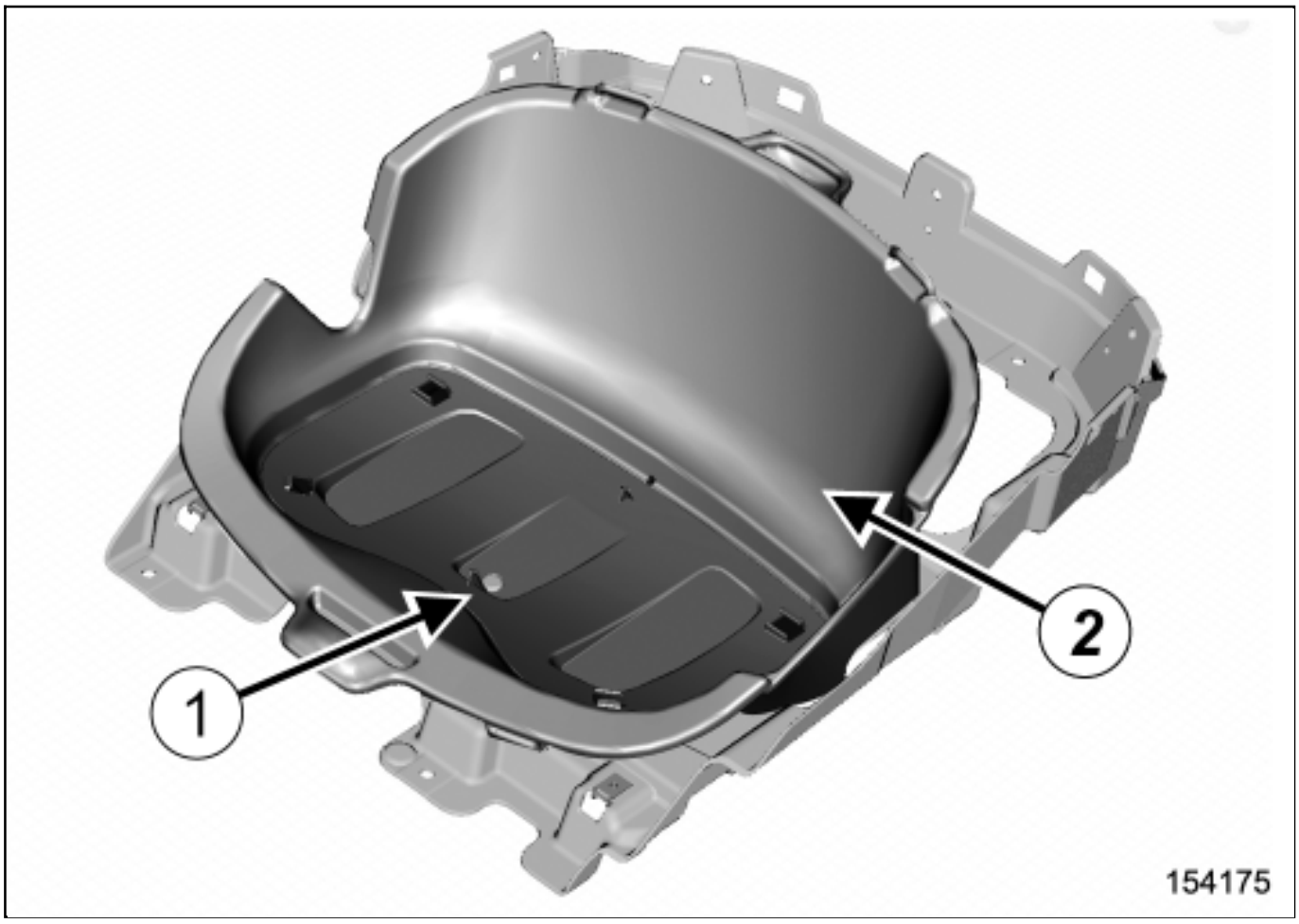
1
2
154175

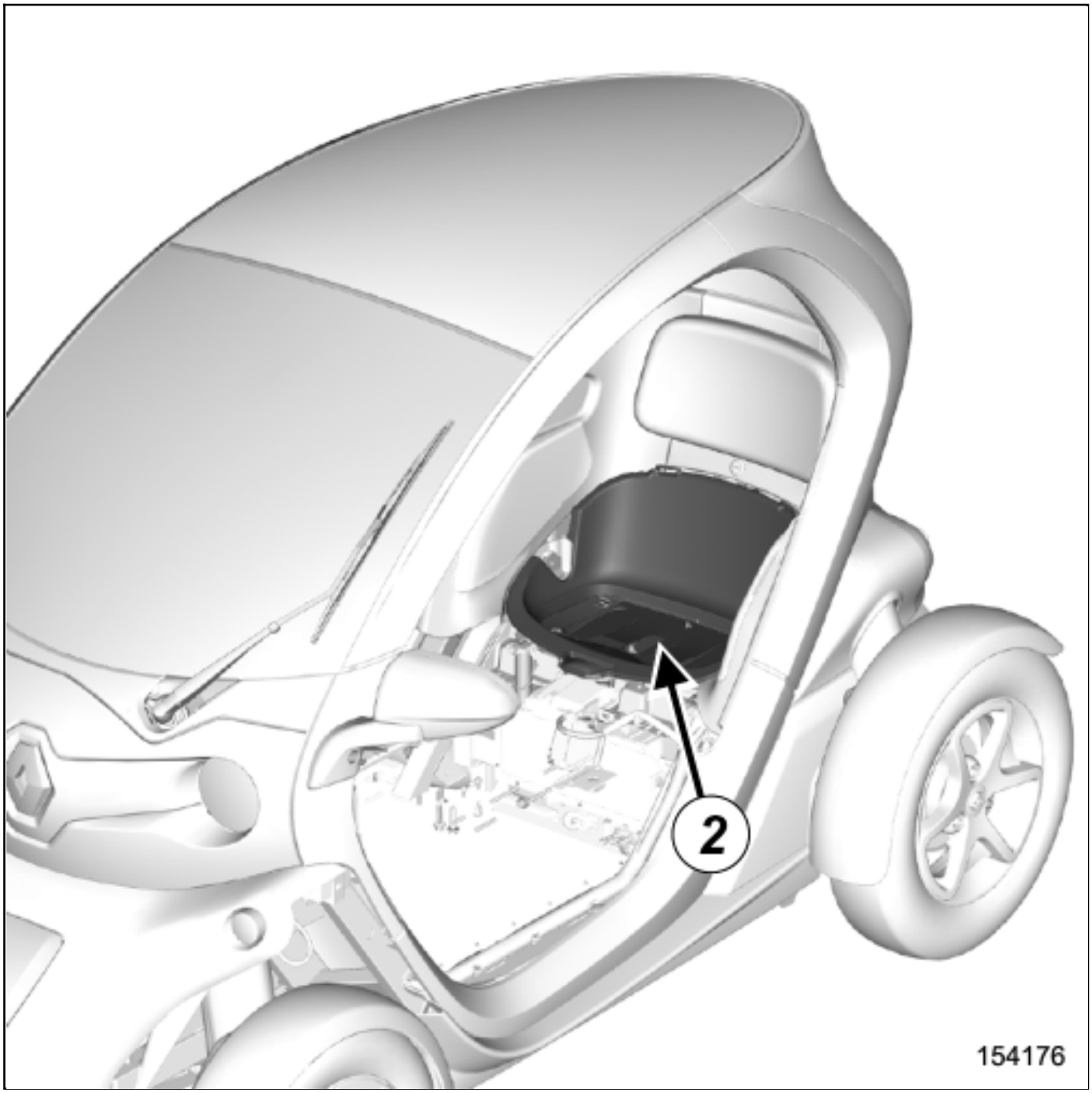

- Remove the rivet(1) from the rear seat base frame(2) .

- Unclip the rear seat base frame.

REFITTING

1. REFITTING PREPARATION OPERATION

parts always to be replaced: **2nd row rear seat frame rivet** .

2. REFITTING OPERATION

Proceed in the reverse order to removal.

Repair-70x14x02x06-01x37-1-1-1.xml

XSL version : 3.02 du 22/07/11

REAR SEAT BASE TRIM: REMOVAL - REFITTING

Note, one or more warnings are present in this procedure

Special tooling required	
Set of trim removal levers.	Car. 1363

WARNING

To avoid all risk of damage to the systems, apply the safety and cleanliness instructions and operation recommendations before carrying out any repair:

Vehicle: Precautions for the repair .

REMOVAL

1. REMOVAL PREPARATION OPERATION

Move the front seat forwards.

2. REMOVAL OPERATION

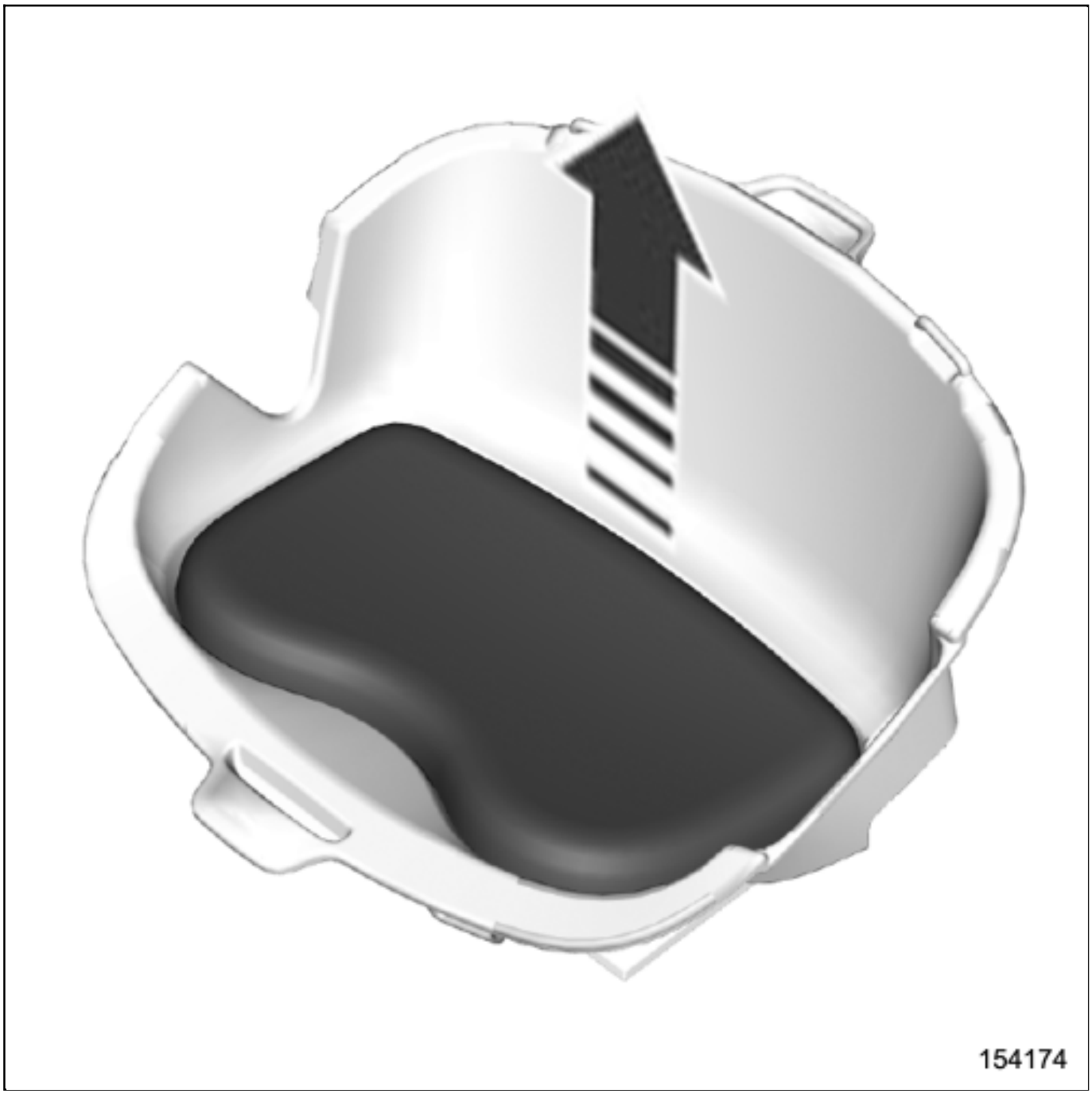
154174

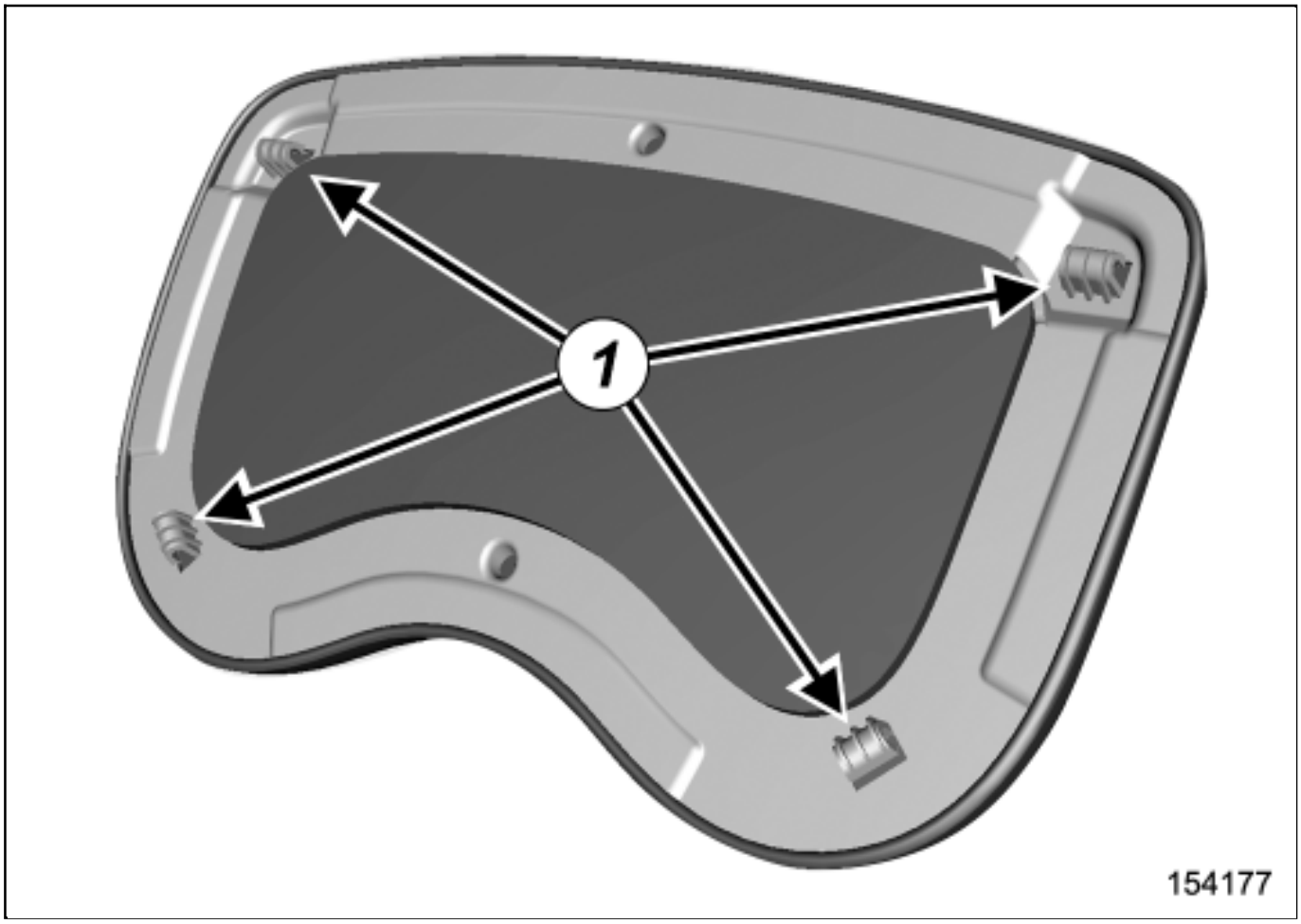

-

Unclip the rear seat base trim clips(1) using the toolSet of trim removal levers.(Car. 1363) by passing the hand under the left side trim at the location of the rear seat belt buckle.

-

Remove the rear seat base trim following the direction of the arrow.

REFITTING

-

Proceed in the reverse order to removal.

REAR SEAT BELT BUCKLE: REMOVAL - REFITTING

Note, one or more warnings are present in this procedure

WARNING

- To avoid all risk of damage to the systems, apply the safety and cleanliness instructions and operation recommendations before carrying out any repair:
  -

Vehicle: Precautions for the repair .

REMOVAL

1. REMOVAL PREPARATION OPERATION

-

Remove the rear seat.

2. REMOVAL OPERATION

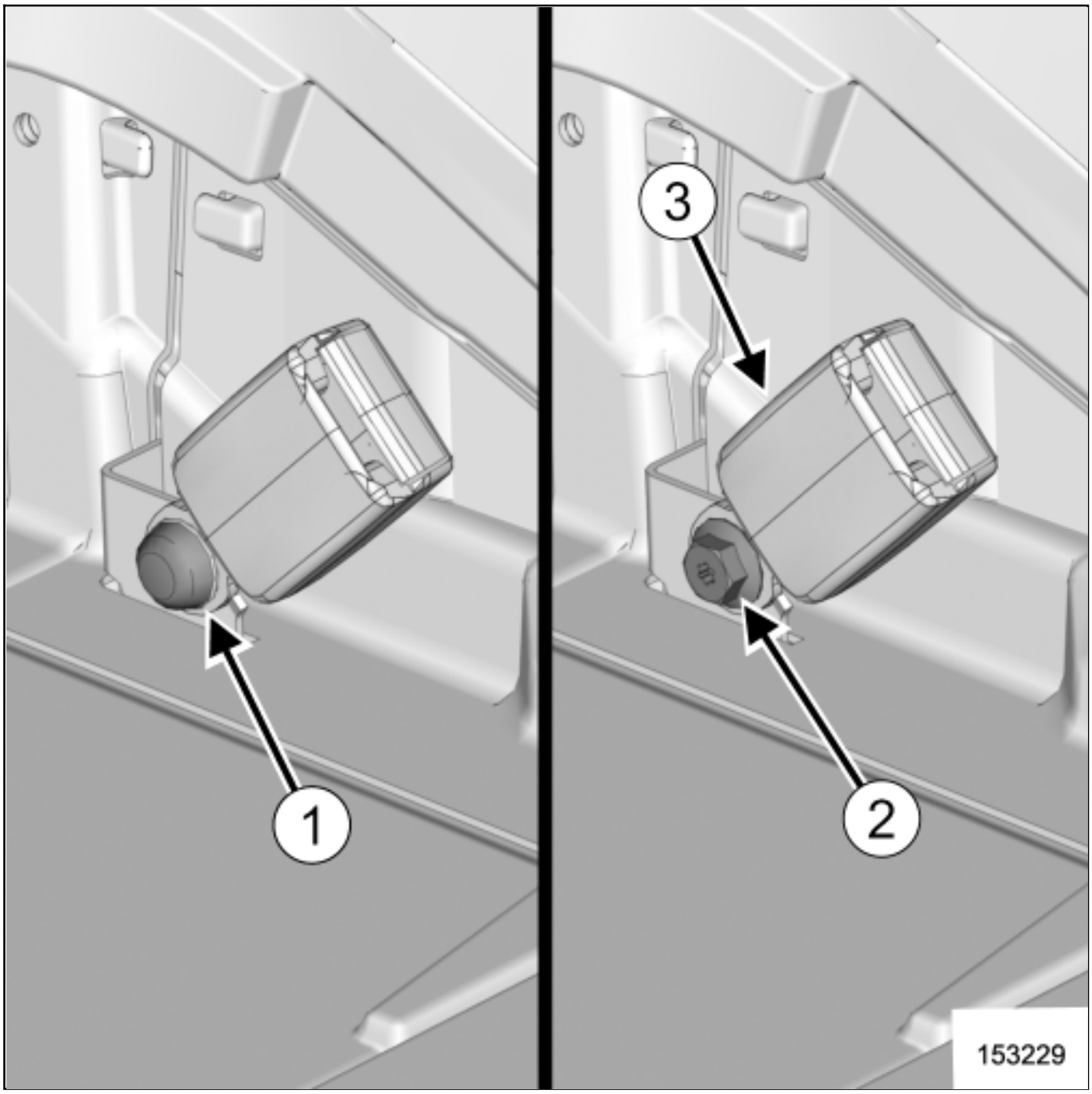

Remove:

- the rear seat belt buckle bolt cover(1) ,
- the rear seat belt buckle bolt(2) ,
- the rear seat belt buckle(3) .

REFITTING

- Proceed in the reverse order to removal.

- Torque tighten the rear seat belt buckle bolt21 N.m.

Repair-31x02x01x20-01x37-1-17-1.xml

XSL version : 3.02 du 22/07/11

REAR SEAT HEADREST: REMOVAL - REFITTING

Note, one or more warnings are present in this procedure

Special tooling required	
Set of trim removal levers.	Car. 1363

WARNING

To avoid all risk of damage to the systems, apply the safety and cleanliness instructions and operation recommendations before carrying out any repair:

Vehicle: Precautions for the repair .

REMOVAL

1. REMOVAL OPERATION

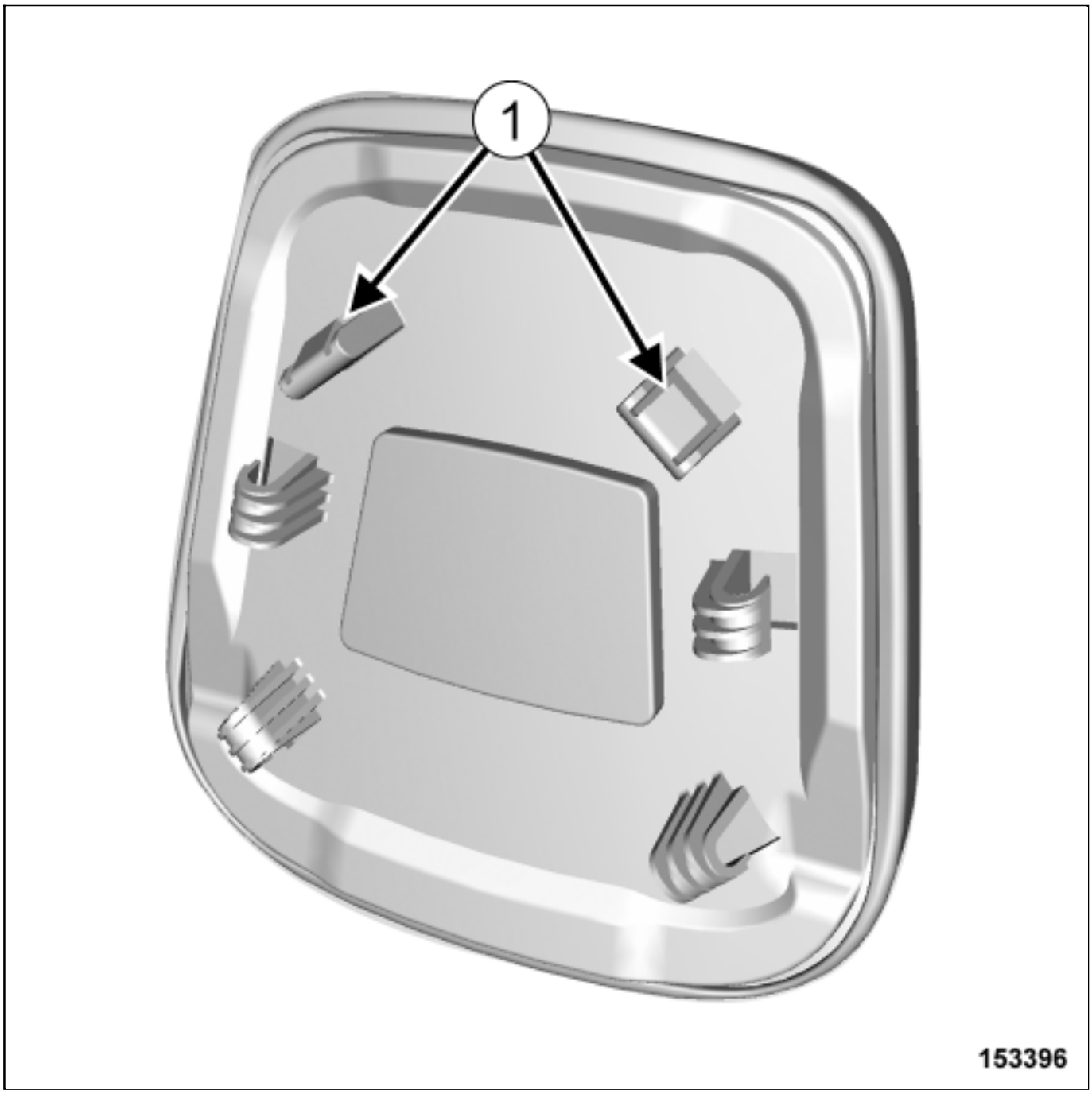

- Unclip the rear seat headrest with the toolSet of trim removal levers.(Car. 1363) , begining by the upper clips (1) .

- Remove the rear seat headrest.

REFITTING

Proceed in the reverse order to removal.

Repair-70x18x04x07-01x37-1-1-1.xml

XSL version : 3.02 du 22/07/11

REAR STUB AXLE CARRIER: REMOVAL - REFITTING

Note, one or more warnings are present in this procedure

WARNING

To avoid all risk of damage to the systems, apply the safety and cleanliness instructions and operation recommendations before carrying out any repair:

Vehicle: Precautions for the repair .

Localisation and specification (tightening, torques, parts always to be replaced)(see 33A, Rear axle components, Rear hub carrier assembly: Exploded view) and(see 33A, Rear axle components, Rear axle assembly: Exploded view) .

REMOVAL

1. REMOVAL PREPARATION OPERATION

Position the vehicle on a two post lifVehicle: Towing and lifting .

Remove:

- the rear wheel on the side concernedWheel: Removal - Refitting ,
- the rear wheel arch linerWheel arch liner: Removal - Refitting ,
- the rear brake calliper mounting bolts on the side concerned(see 33A, Rear axle components, Rear brake calliper assembly: Exploded view) .

Move aside the rear brake calliper assembly.

Attach the rear brake calliper assembly to the shock absorber spring.

- Remove the driveshaft nut(see 33A, Rear axle components, Rear hub carrier assembly: Exploded view) .

2. REMOVAL OPERATION

- Remove the transversal rear lower tie-rod nut(see 33A, Rear axle components, Rear axle assembly: Exploded view) .

- Extract the transversal rear lower tie-rod endBall-joint uncoupling tool : Use .

- Remove (see 33A, Rear axle components, Rear axle assembly: Exploded view) :
  - the lower arm ball joint nut,
  - the lower arm ball joint from the rear driveshaft hub carrierBall-joint uncoupling tool : Use ,
  - the shock absorber base nut and bolt,
  - the rear driveshaft hub carrier.

REFITTING

1. REFITTING OPERATION

- Proceed in the reverse order to removal.

2. FINAL OPERATION

- Control and adjust the rear axle assemblyRear axle system: Adjustment .

XSL version : 3.02 du 22/07/11

REAR WHEEL DRIVESHAFT: REMOVAL - REFITTING

Note, one or more warnings are present in this procedure

WARNING

To avoid all risk of damage to the systems, apply the safety and cleanliness instructions and operation recommendations before carrying out any repair:

Vehicle: Precautions for the repair .

Localisation and specification (tightening, torques, parts always to be replaced)(see 29A, Driveshafts , Driveshaft assembly: Exploded view) .

REMOVAL

1. REMOVAL PREPARATION OPERATION

Position the vehicle on a two post lift Vehicle: Towing and lifting .

Remove:

- the rear wheel on the side concerned Wheel: Removal - Refitting ,
- the rear driveshaft hub carrier on the side concerned Rear hub carrier assembly: Exploded view .

2. REMOVAL OPERATION

Remove the rear wheel driveshaft on the side concerned Rear hub carrier assembly: Exploded view .

REFITTING

Proceed in the reverse order to removal.

Repair-13x01x02-01x37-1-5-1.xml

XSL version : 3.02 du 22/07/11

REAR WHEEL DRIVESHAFT: REMOVAL - REFITTING

Note, one or more warnings are present in this procedure

WARNING

To avoid all risk of damage to the systems, apply the safety and cleanliness instructions and operation recommendations before carrying out any repair:

Vehicle: Precautions for the repair .

Localisation and specification (tightening, torques, parts always to be replaced)(see 29A, Driveshafts , Driveshaft assembly: Exploded view) .

REMOVAL

1. REMOVAL PREPARATION OPERATION

Position the vehicle on a two post lift Vehicle: Towing and lifting .

Remove:

- the rear wheel on the side concerned Wheel: Removal - Refitting ,
- the rear driveshaft hub carrier on the side concerned Rear hub carrier assembly: Exploded view .

2. REMOVAL OPERATION

Remove the rear wheel driveshaft on the side concerned Rear hub carrier assembly: Exploded view .

REFITTING

Proceed in the reverse order to removal.

Repair-13x01x02-01x37-1-5-1.xml

XSL version : 3.02 du 22/07/11

RIGHT-HAND SUSPENDED ENGINE MOUNTING: REMOVAL - REFITTING

Note, one or more warnings are present in this procedure

Equipment required
component jack

WARNING

To avoid all risk of damage to the systems, apply the safety and cleanliness instructions and operation recommendations before carrying out any repair:

Vehicle: Precautions for the repair .

Location and specifications (tightening torques, parts always to be replaced, etc.):(see 19D, Engine mounting, Engine-gearbox unit support assembly: Exploded view) .

REMOVAL

1. REMOVAL PREPARATION OPERATION

Position the vehicle on a two-post lifVehicle: Towing and lifting .

Remove the rear bumper trimExterior body rear trim assembly: Exploded view .

Remove the engine undertray.

Remove the front bumper upper stripExterior body front trim assembly: Exploded view .

Remove Exterior body side trim assembly: Exploded view :

- the right-hand A-pillar trim,
- the right-hand B-pillar trim,
- the right-hand body side trim,
- the right-hand sill panel extension,
- the right-hand rear wheel arch liner.

2. REMOVAL OPERATION

- Position a component jackunder the engine-gearbox assembly.

- Remove (see 19D, Engine mounting, Engine-gearbox unit support assembly: Exploded view) :
  - the right-hand suspended engine mounting support bolts,
  - the right-hand suspended engine mounting rubber pad bolt,
  - the right-hand suspended engine mounting support.

REFITTING

- Proceed in the reverse order to removal.

Repair-10x04x01x03-01x37-1-93-1.xml

XSL version : 3.02 du 22/07/11

RIGHT-HAND SUSPENDED ENGINE MOUNTING: REMOVAL - REFITTING

Note, one or more warnings are present in this procedure

Equipment required
component jack

WARNING

To avoid all risk of damage to the systems, apply the safety and cleanliness instructions and operation recommendations before carrying out any repair:

Vehicle: Precautions for the repair .

Location and specifications (tightening torques, parts always to be replaced, etc.):(see 19D, Engine mounting, Engine-gearbox unit support assembly: Exploded view) .

REMOVAL

1. REMOVAL PREPARATION OPERATION

Position the vehicle on a two-post lifVehicle: Towing and lifting .

Remove the left-hand door mirrorDoor mirror: Removal - Refitting .

Remove the rear bumper trimExterior body rear trim assembly: Exploded view .

Remove the engine undertray.

- Remove the front bumper upper strip Exterior body front trim assembly: Exploded view .

- Remove Exterior body side trim assembly: Exploded view :
  - the right-hand A-pillar trim,
  - the right-hand B-pillar trim,
  - the right-hand body side trim,
  - the right-hand sill panel extension,
  - the right-hand rear wheel arch liner.

2. REMOVAL OPERATION

- Position a component jack under the engine-gearbox assembly.

- Remove (see 19D, Engine mounting, Engine-gearbox unit support assembly: Exploded view) :
  - the right-hand suspended engine mounting support bolts,
  - the right-hand suspended engine mounting rubber pad bolt,
  - the right-hand suspended engine mounting support.

REFITTING

- Proceed in the reverse order to removal.

XSL version : 3.02 du 22/07/11

RIGID BRAKE PIPE: REMOVAL - REFITTING

Note, one or more warnings are present in this procedure

WARNING

- To avoid all risk of damage to the systems, apply the safety and cleanliness instructions and operation recommendations before carrying out any repair:
  - Brake circuit: Precautions for the repair ,
  - Vehicle: Precautions for the repair .

CAUTION

Prepare for the flow of fluid, and protect the surrounding components.

Location and specifications (tightening torques, parts always to be replaced, etc.) :

- (see 33A, Rear axle components, Rear brake calliper assembly: Exploded view) ,
- Braking control assembly: Exploded view .

REMOVAL

1. REMOVAL PREPARATION OPERATION

1- RIGID BRAKE PIPE BETWEEN COMPENSATOR AND MANIFOLD

Position the vehicle on a two post lift Vehicle: Towing and lifting .

Remove the front bumper upper strip Exterior body front trim assembly: Exploded view .

Remove Exterior body side trim assembly: Exploded view :

- the A-pillar trims,
- the B-pillar trims,
- the body side trims,
- the sill panel extensions.

Remove Exterior body front trim assembly: Exploded view :

- the front bumper lower trim,
- the front bumper trim.

Remove:

- the front right-hand wheel arch linerExterior body side trim assembly: Exploded view .
- the front seatFront seat assembly: Exploded view ,
- the rear seat,
- the rear headliningInterior body side trim assembly: Exploded view ,
- the rear side panel trimsInterior body side trim assembly: Exploded view ,
- the front floorFloor trim assembly: Exploded view ,
- the centre floorFloor trim assembly: Exploded view .

2- RIGID BRAKE PIPE BETWEEN MANIFOLD AND REAR LEFT-HAND BRAKE HOSE

Position the vehicle on a two post liftVehicle: Towing and lifting .

- Remove the front bumper upper strip Exterior body front trim assembly: Exploded view .
- Remove the rear bumper trim Exterior body rear trim assembly: Exploded view .
- Remove Exterior body side trim assembly: Exploded view :
  - the A-pillar trims,
  - the B-pillar trims,
  - the body side trims,
  - the sill panel extensions,
  - the rear left-hand wheel arch liner.
- Remove:
  - the front seat Front seat assembly: Exploded view ,
  - the rear seat,
  - the rear headlining Interior body side trim assembly: Exploded view ,
  - the rear side panel trims Interior body side trim assembly: Exploded view ,
  - the front floor Floor trim assembly: Exploded view ,
  - the centre floor Floor trim assembly: Exploded view .

3- RIGID BRAKE PIPE BETWEEN MANIFOLD AND REAR RIGHT-HAND BRAKE HOSE

- Position the vehicle on a two post lift Vehicle: Towing and lifting .

- Remove the front bumper upper strip Exterior body front trim assembly: Exploded view .
- Remove the rear bumper trim Exterior body rear trim assembly: Exploded view .
- Remove Exterior body side trim assembly: Exploded view :
  - the right-hand A-pillar trim,
  - the right-hand B-pillar trim,
  - the right-hand body side trim,
  - the right-hand sill panel extension,
  - the rear right-hand wheel arch liner.

2. REMOVAL OPERATION

1- RIGID BRAKE PIPE BETWEEN COMPENSATOR AND MANIFOLD

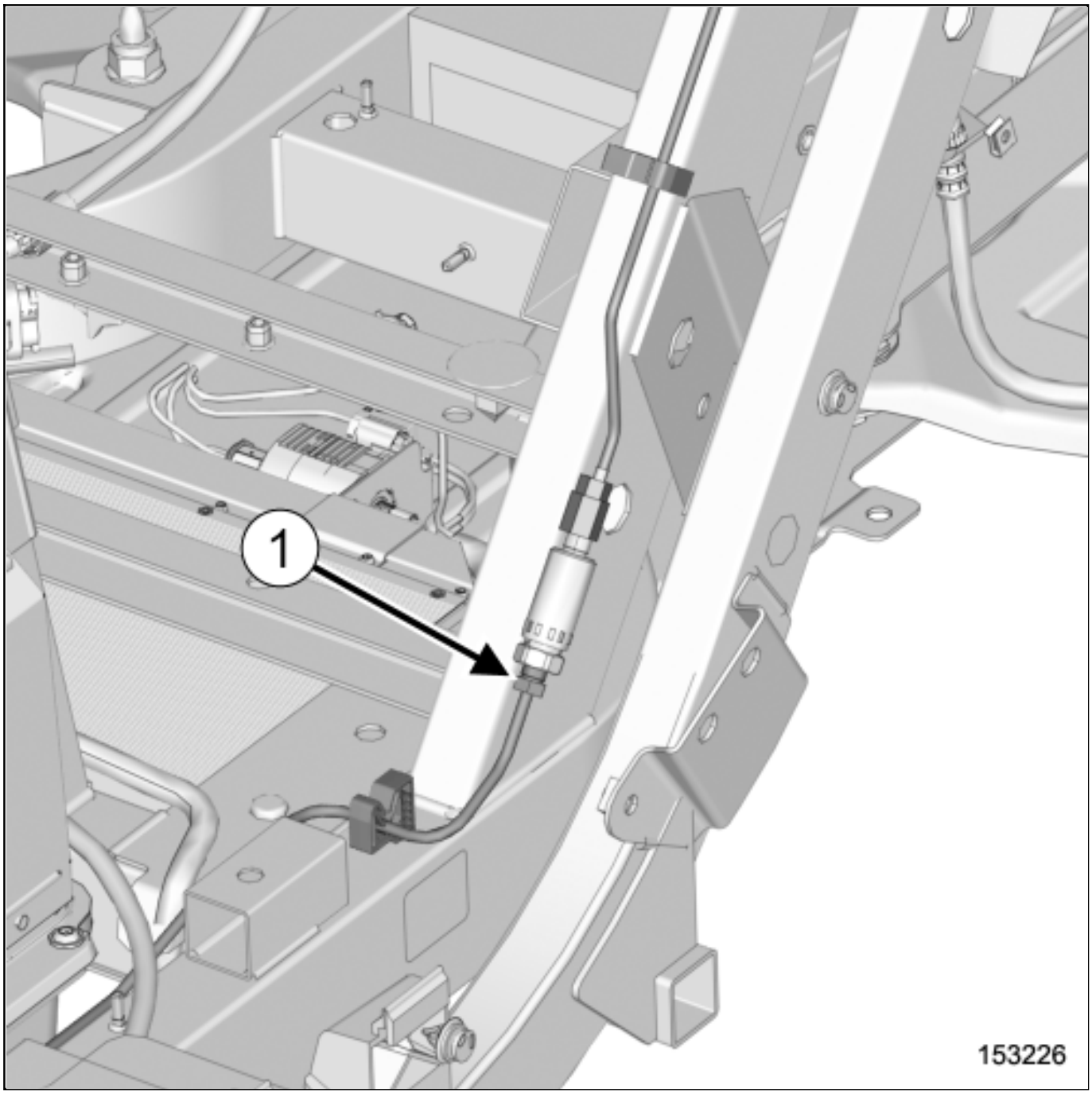
1
153226

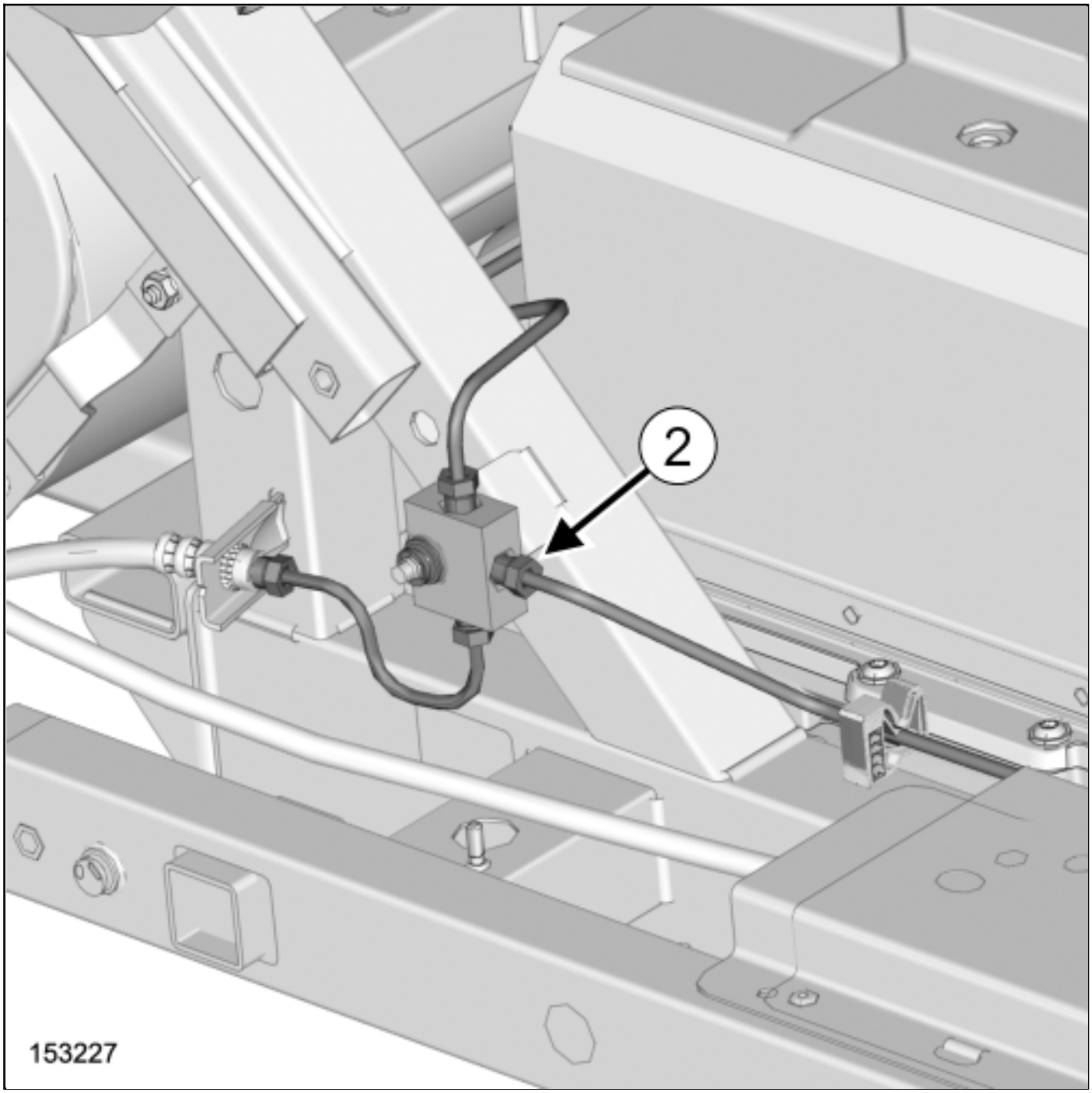

Loosen:

- the rigid brake pipe union between compensator and manifold on the compensator(1) ,
- the rigid brake pipe union between compensator and manifold on the manifold(2) .

Remove the rigid brake pipe between compensator and manifold.

2- RIGID BRAKE PIPE BETWEEN MANIFOLD AND REAR LEFT-HAND BRAKE HOSE

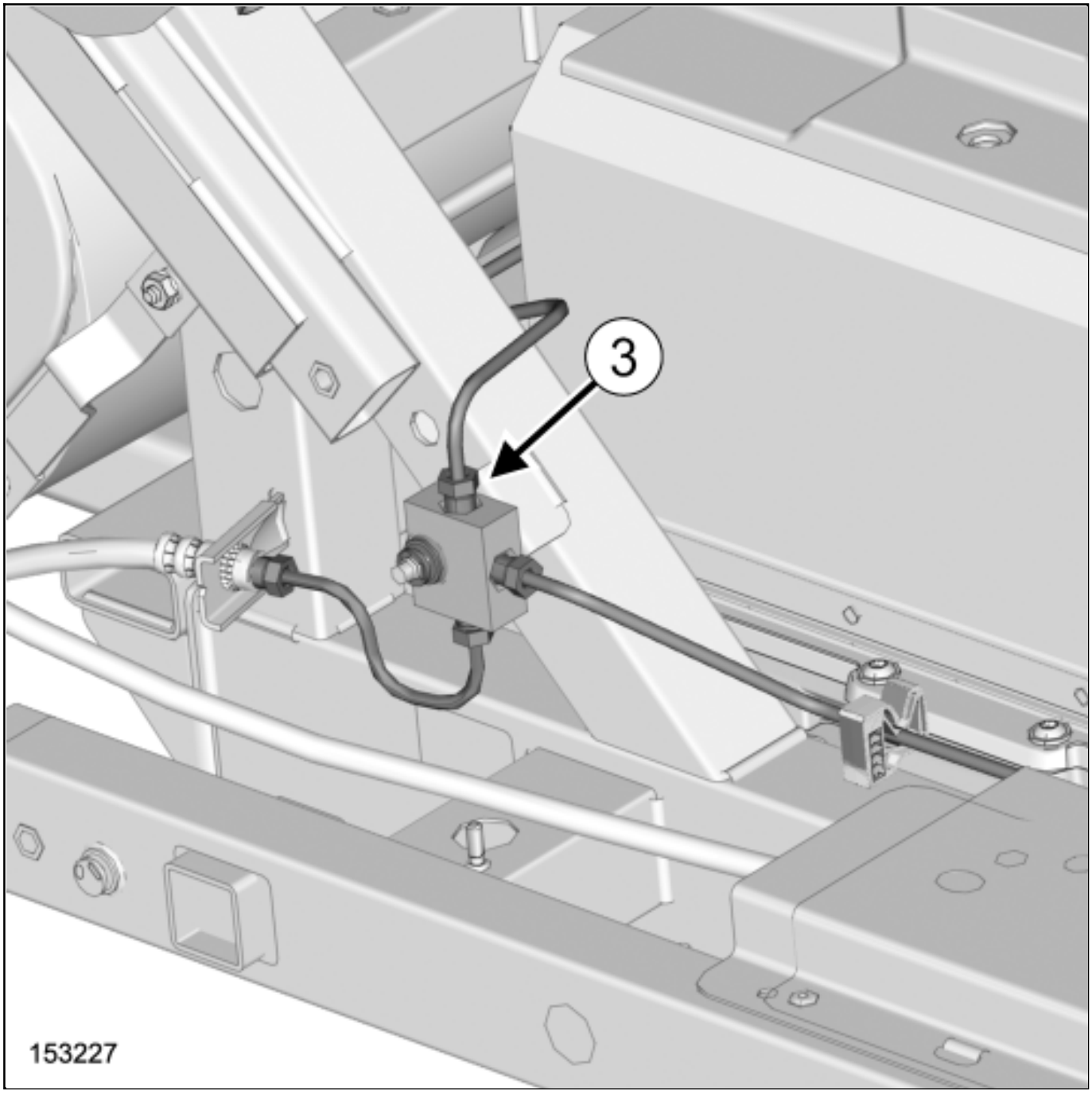

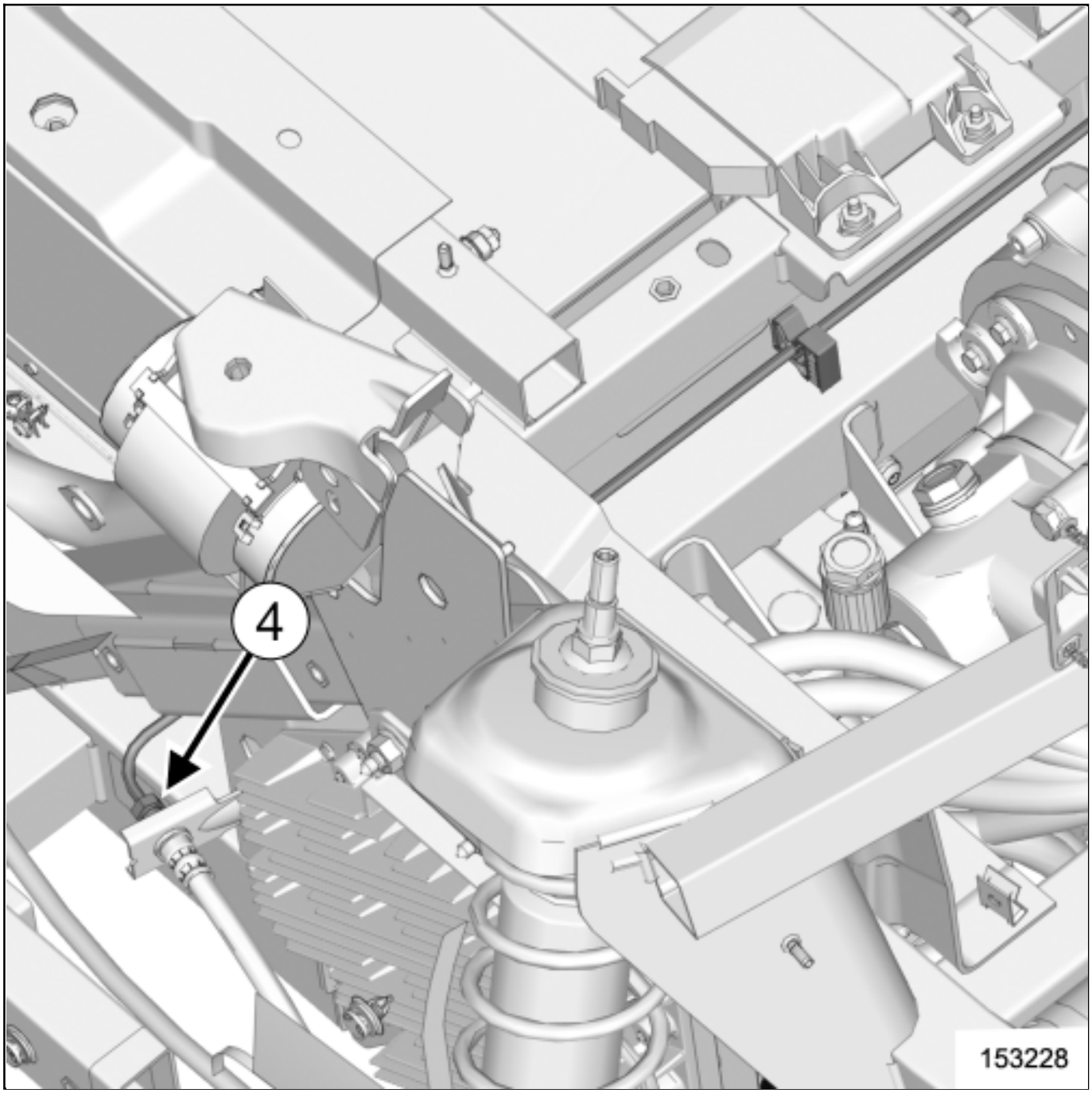

Loosen:

- the rigid brake pipe union between manifold and rear left-hand brake hose on the manifold(3) ,
- the rigid brake pipe union between manifold and rear left-hand brake hose on the rear left-hand brake hose (4) .

Remove the rigid brake pipe between manifold and rear left-hand brake hose.

3- RIGID BRAKE PIPE BETWEEN MANIFOLD AND REAR RIGHT-HAND BRAKE HOSE

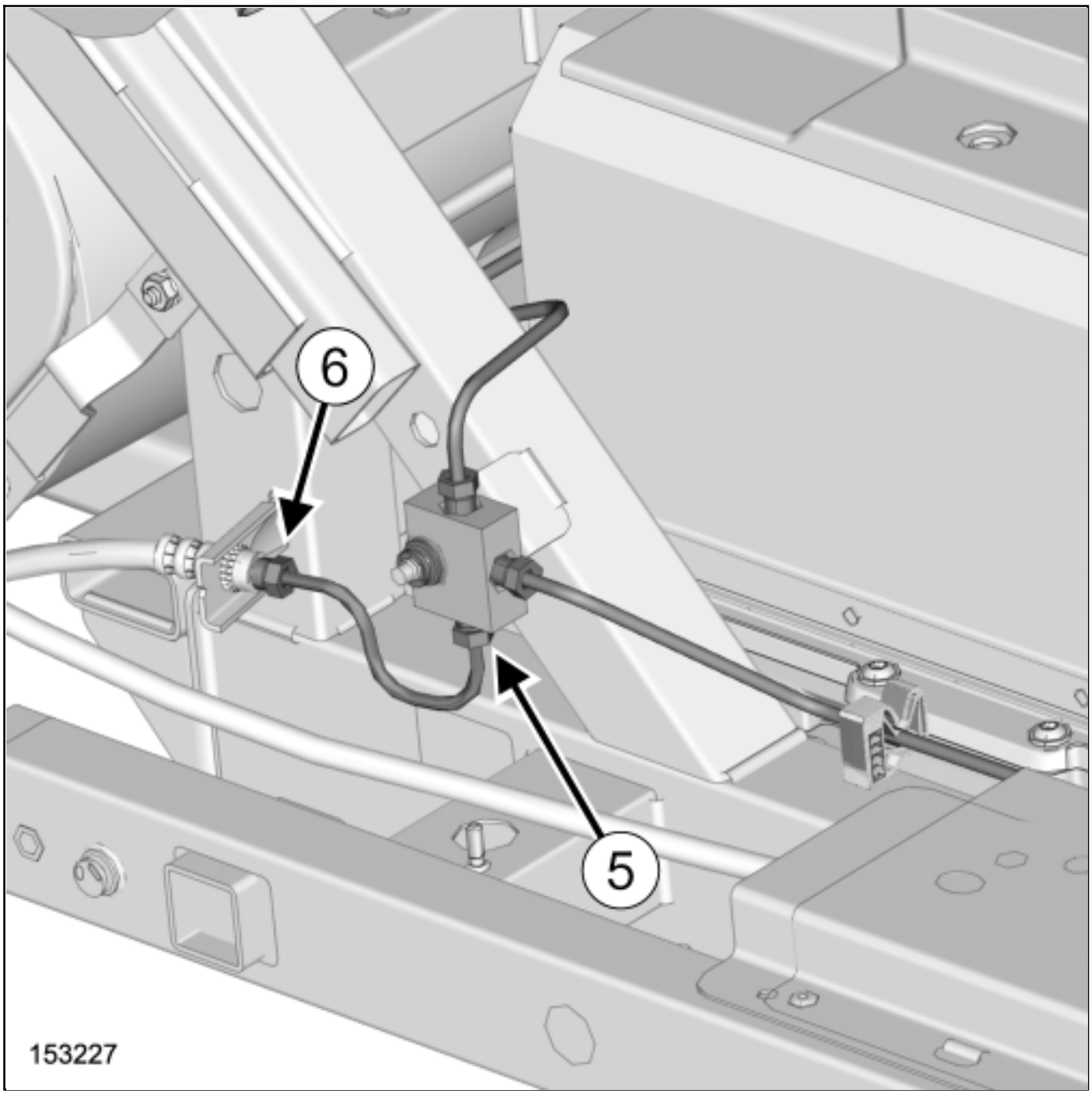

Loosen:

- the rigid brake pipe union between manifold and rear right-hand brake hose on the manifold(5) ,
- the rigid brake pipe union between manifold and rear right-hand brake hose on the rear right-hand brake hose (6) .

- Remove the rigid brake pipe between manifold and rear right-hand brake hose.

REFITTING

1. REFITTING OPERATION

- Proceed in the reverse order to removal.

2. FINAL OPERATION

- Fill up and bleed the brake circuit**Braking circuit: Bleed** .

Repair-13x03x09x01-01x37-1-16-1.xml

XSL version : 3.02 du 22/07/11

RIVETEDCONNECTIONS

1. DISASSEMBLY

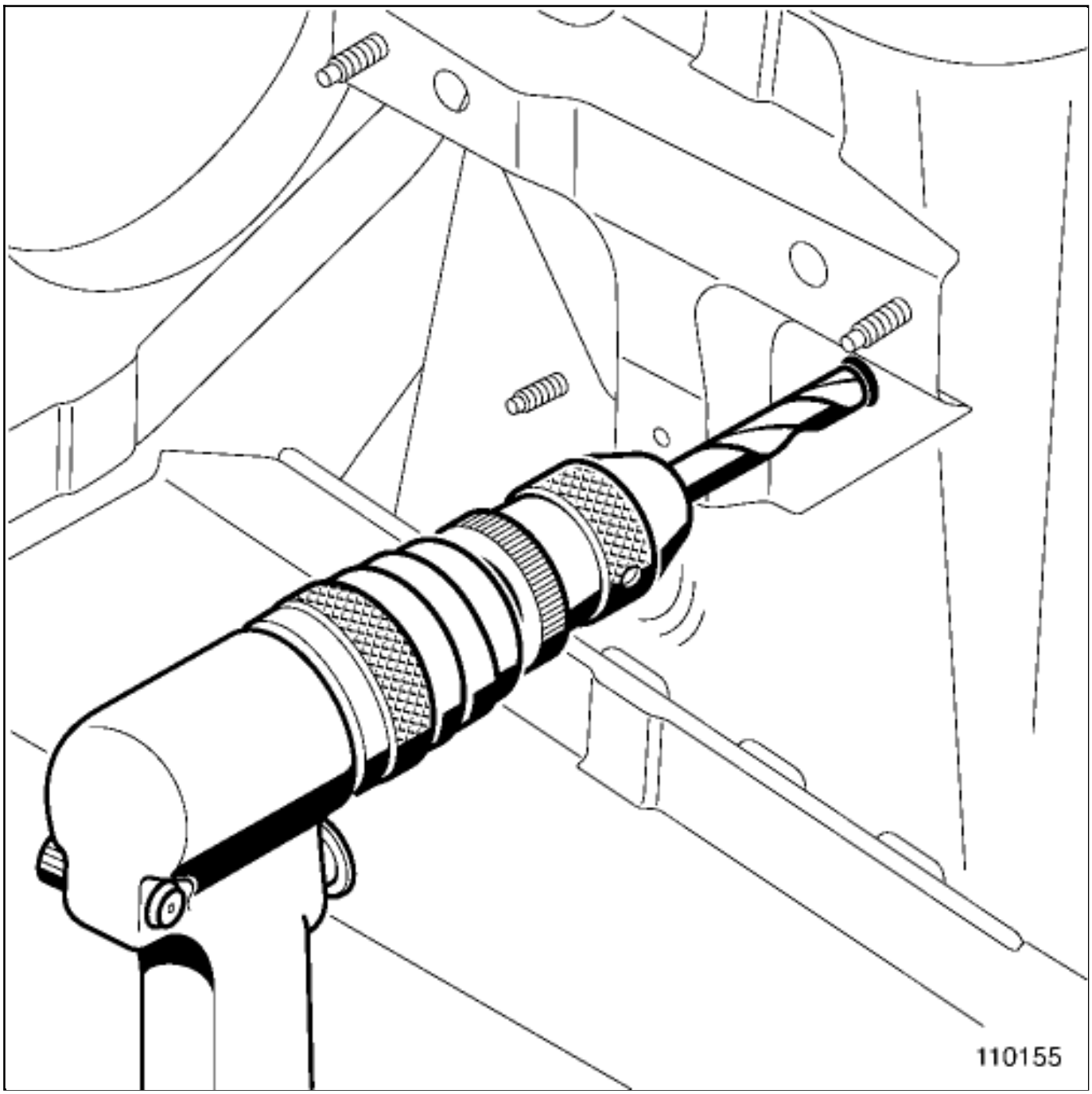

Remove the nail from the rivet head if still present.

Drill the rivet head using a drill bit which is slightly bigger than the diameter of the rivet body.

Remove the rivet body to separate the two components.

Remove the component to be replaced.

2. PREPARATION BEFORE ASSEMBLY

1- ADJUSTMENT BEFORE ASSEMBLY

Position the replacement part, adjust it and fix it using the locking pliers.

If necessary, reassemble the adjacent components and check the panel gaps.

(see 05B, Equipment and Tools, Tools for adjusting and supporting a structural component: Use)

Note:

If a spot weld must be replaced with a rivet, simultaneously drill the spare part and the part on the vehicle depending on the diameter of the rivet used (see table below).

2- MARKING AND IDENTIFYING THE JOINTS

Mark the joint areas.

Remove the part.

3- PREPARATION OF THE JOINTS ON THE REPLACEMENT PART

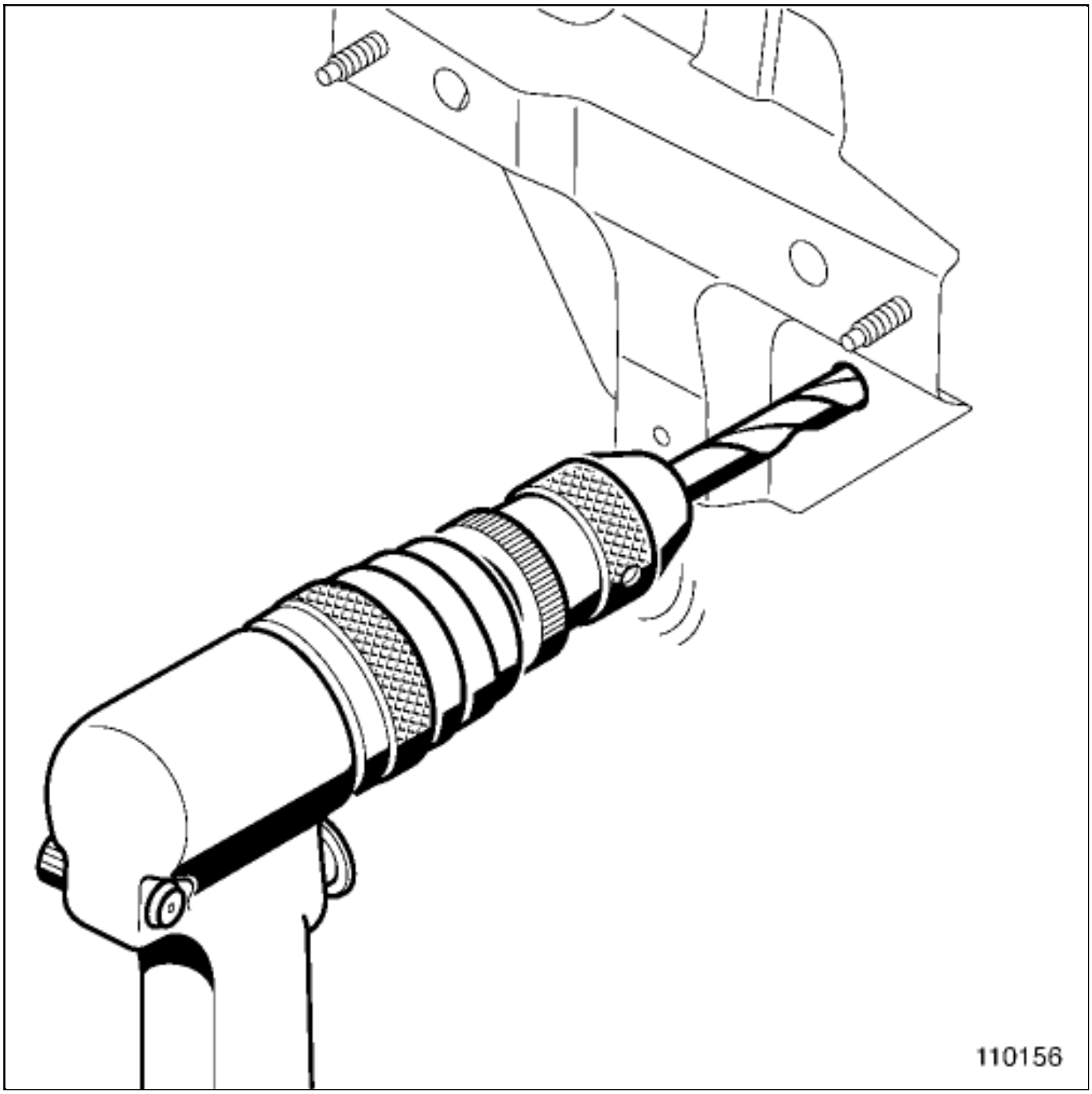

Drill or pierce the locations marked previously, in accordance with the table below:

∅ rivet (mm)	4	4.8	6.4
∅ drilling hole (mm)	4.1 to 4.5	4.9 to 5.1	6.6 to 7

4- APPLY THE PROTECTION BEFORE ASSEMBLY

Fit the sound insulation inserts into the hollow sections, if necessary.

(see 04F, Bodywork products and mountings, Soundproofing products before assembly: Use)

Apply the anti-corrosion protection.

(see 04F, Bodywork products and mountings, Anti-corrosion protection product before assembly: Use)

3. ASSEMBLY

1- FITTING AND ADJUSTING THE REPLACED PARTS

Reassemble the part, adjust it and fix it using the locking pliers.

If necessary, reassemble the adjacent components and check the panel gaps.

(see 05B, Equipment and Tools, Tools for adjusting and supporting a structural component: Use)

2- RIVETING

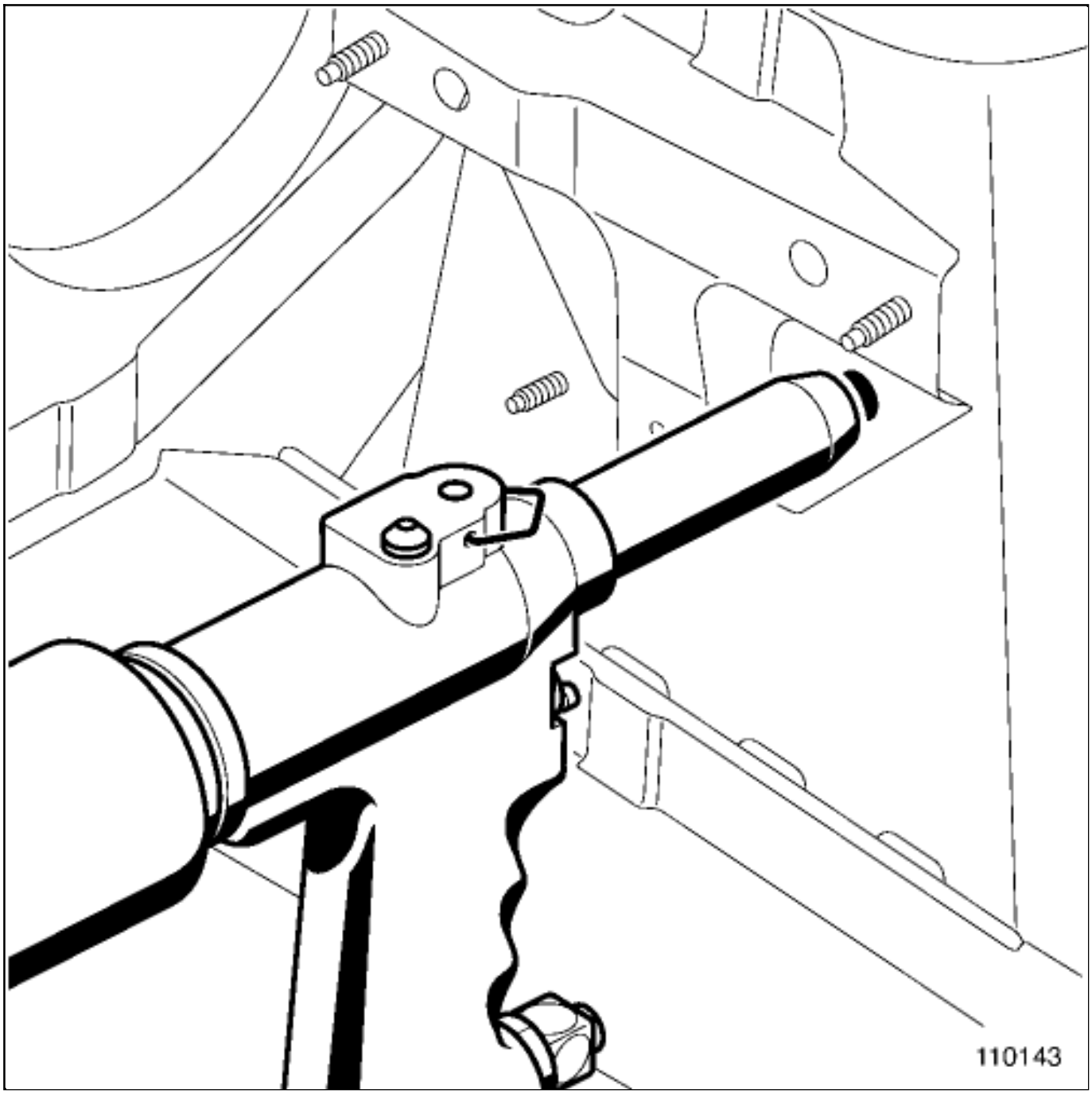

Fit the rivet.

Note:

In all cases, hold the pliers firmly when breaking the nail to avoid damaging the component.

Note:

For riveting three thickness types, check that the components are correctly secured together and that the length of the rivet body is sufficient to ensure they are held.

Repair-40x01x32-02x21-1-1-1.xml

XSL version : 3.02 du 22/07/11

ROOF PANEL ARCH: REMOVAL - REFITTING

Note, one or more warnings are present in this procedure

Equipment required
Diagnostic tool

WARNING

To avoid all risk of damage to the systems, apply the safety and cleanliness instructions and operation recommendations before carrying out any repair:

Vehicle: Precautions for the repair .

REMOVAL

1. REMOVAL PREPARATION OPERATION

Position the vehicle on a two-post lifVehicle: Towing and lifting .

WARNING

To avoid any risk of triggering when working on or near a pyrotechnic component (airbags or pretensioners), lock the airbag computer using the diagnostic tool.

When this function is activated, all the trigger lines are inhibited and the airbag warning light on the instrument panel lights up continuously (ignition on).

Lock the airbag computer using the Diagnostic tool(see Fault finding - Replacement of components) (88C, Airbags and pretensioners).

WARNING

DANGER : Risk of serious injuries due to the short-circuiting or the untimely triggering of an electrical system (pyrotechnical parts, windscreen wiper motor, electric fan, etc.) following possible loopback of the 12-volt supply circuit by the voltage transformer.

Please adhere to the instructions regarding cut-off of the 12-volt supply circuit.

If the procedure fails, do not continue with your task and ask an employee who is qualified and authorized to work on a high-voltage onboard network to perform a diagnostic Vehicle: Precautions for the repair .

Lockout the 12V supply circuit12 V supply circuit : Lockout - Removal of lockout .

Remove the front bumper upper stripExterior body front trim assembly: Exploded view .

Remove Exterior body side trim assembly: Exploded view :

- the A-pillar trims,
- the B-pillar trims,
- the roof front section trims,
- the windscreen side windows.

Remove Exterior body front trim assembly: Exploded view :

- the front bumper lower trim,
- the front bumper trim,

the front end panel.

- Remove the dashboard Dashboard assembly: Exploded view .
- Remove the roof rear section Exterior body rear trim assembly: Exploded view .
- Remove the rear headlining Interior body side trim assembly: Exploded view .
- Remove Roof trim assembly: Exploded view :
  - the roof rear cross member trim,
  - the roof front cross member trim,
  - the windscreen pillar trims.
- Remove Wipers/washing assembly : Exploded view :
  - the windscreen wiper arm,
  - the scuttle panel grille.
- Disconnect the heater windscreen connectors.

2. REMOVAL OPERATION

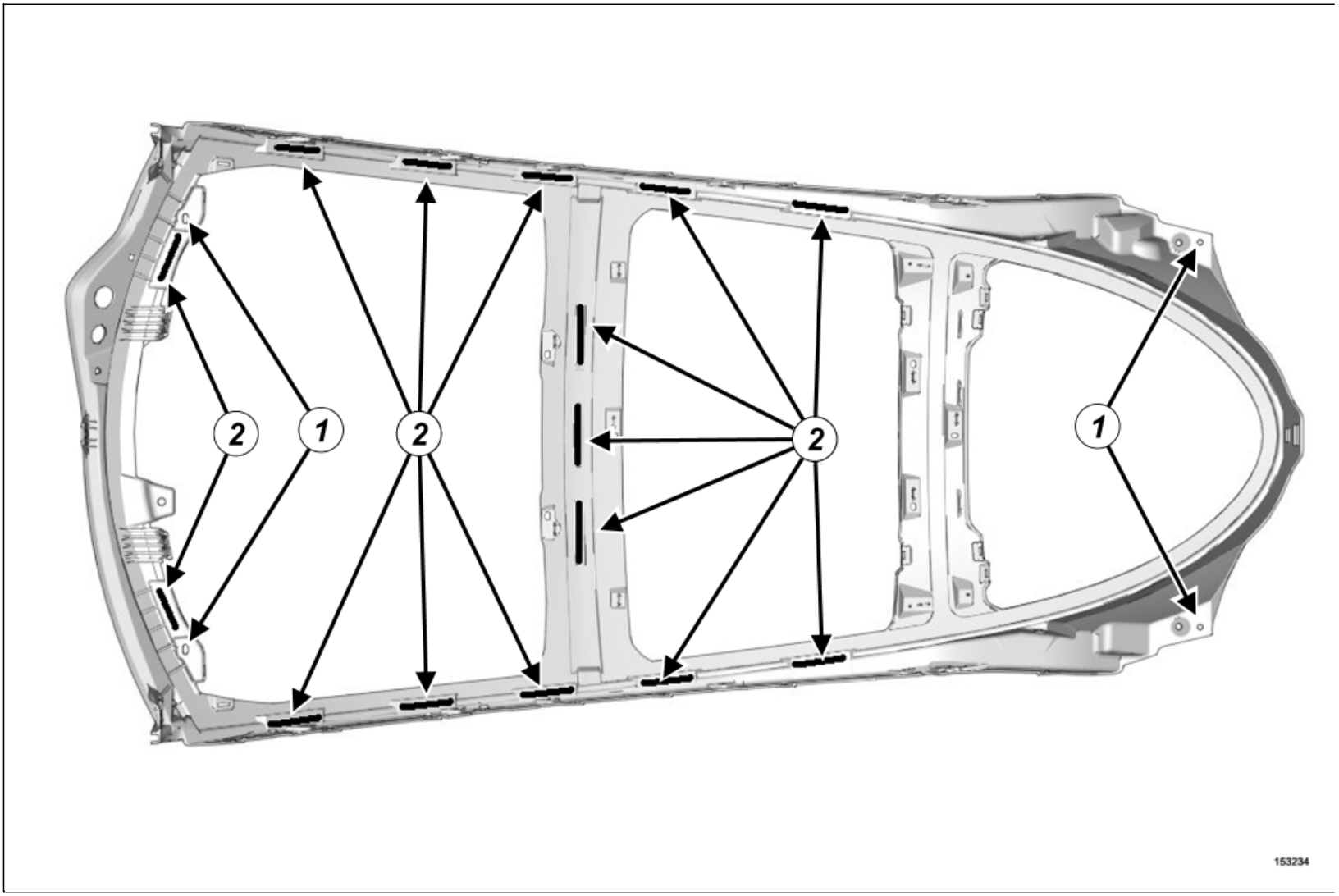

- Remove the roof panel arch bolts(1) .
- Cut the cement beads(2) Window bonding tool: Use and Window detachment: Description .
- Remove the roof panel arch.

> Note:
>
> This operation requires two operators.

1- IN THE EVENT OF REPLACEMENT

- Remove:
  - the windscreen Windscreen: Removal - Refitting ,
  - the fixed glass roof Fixed glass roof: Removal - Refitting .

REFITTING

1. REFITTING PREPARATION OPERATION

- For preparation and bonding Products for preparing and bonding windows: Description .

2. REFITTING OPERATION

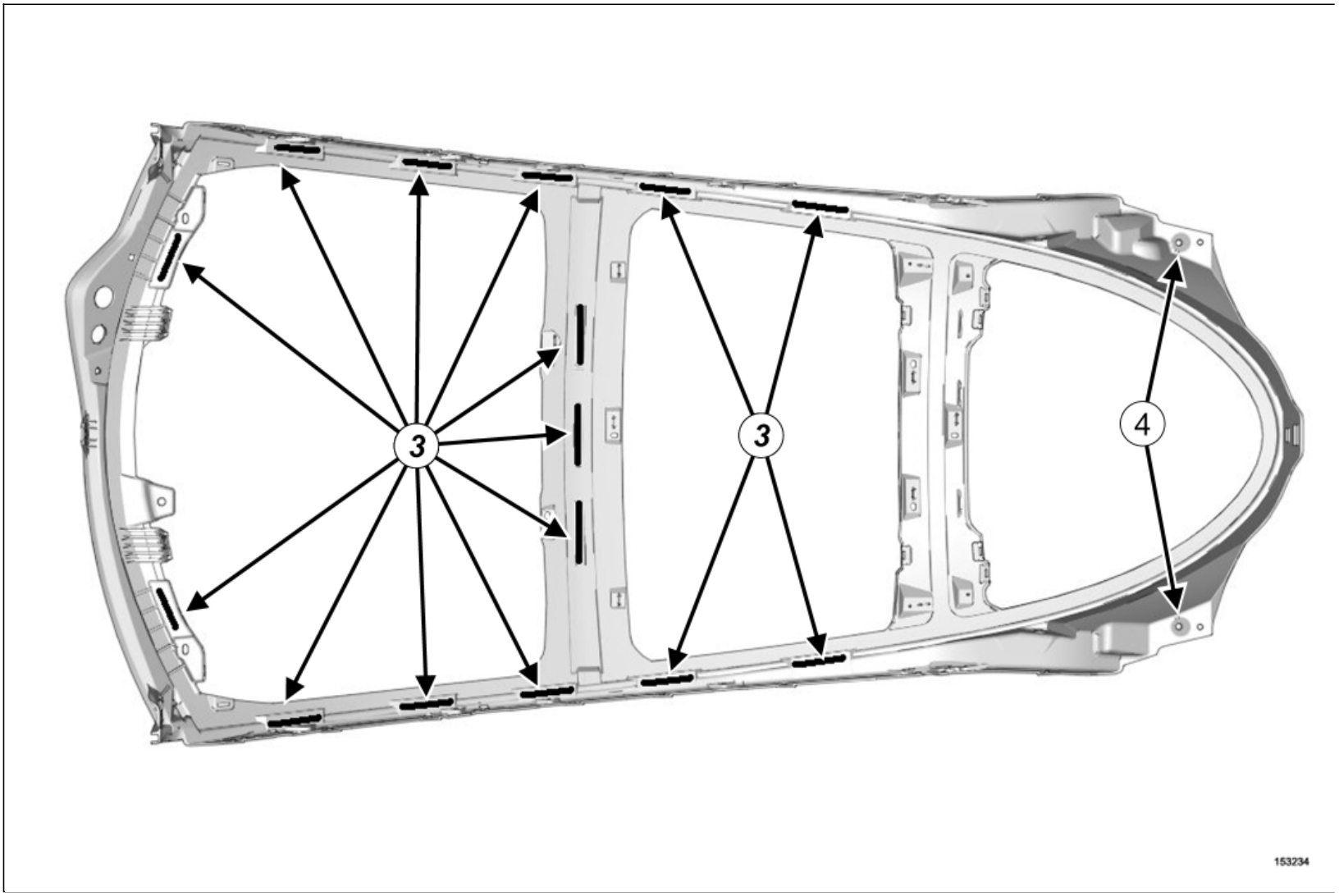

- Apply cement beads at(3) Window bonding: Description .
- Position the roof arch panel using the pilot holes on the front cross member and on the rear end panel(4) .
- Refit:
  - the roof panel arch,
  - the roof panel arch bolts.

3. FINAL OPERATION

- Proceed in the reverse ordre to removal.
- Remove the lockout of the 12V supply circuit12 V supply circuit : Lockout - Removal of lockout .
- Unlock the airbag computer using the Diagnostic tool(see Fault finding - Replacement of components) (88C, Airbags and pretensioners).

Repair-40x07x04x11-01x37-1-1-1.xml

XSL version : 3.02 du 22/07/11

ROOF PANEL ARCH: REPLACEMENT

Note, one or more warnings are present in this procedure

WARNING

DANGER: HIGH VOLTAGE VEHICLE.

Risks of serious burns or electric shock that may prove fatal.

Before carrying out any work on the vehicle, it is essential that you adhere to the instructions regarding vehicle voltage cut-off. This work must be carried out by an employee who is qualified and authorized to work on a high-voltage onboard network Vehicle: Precautions for the repair .

1. COMPOSITION OF THE SPARE PART

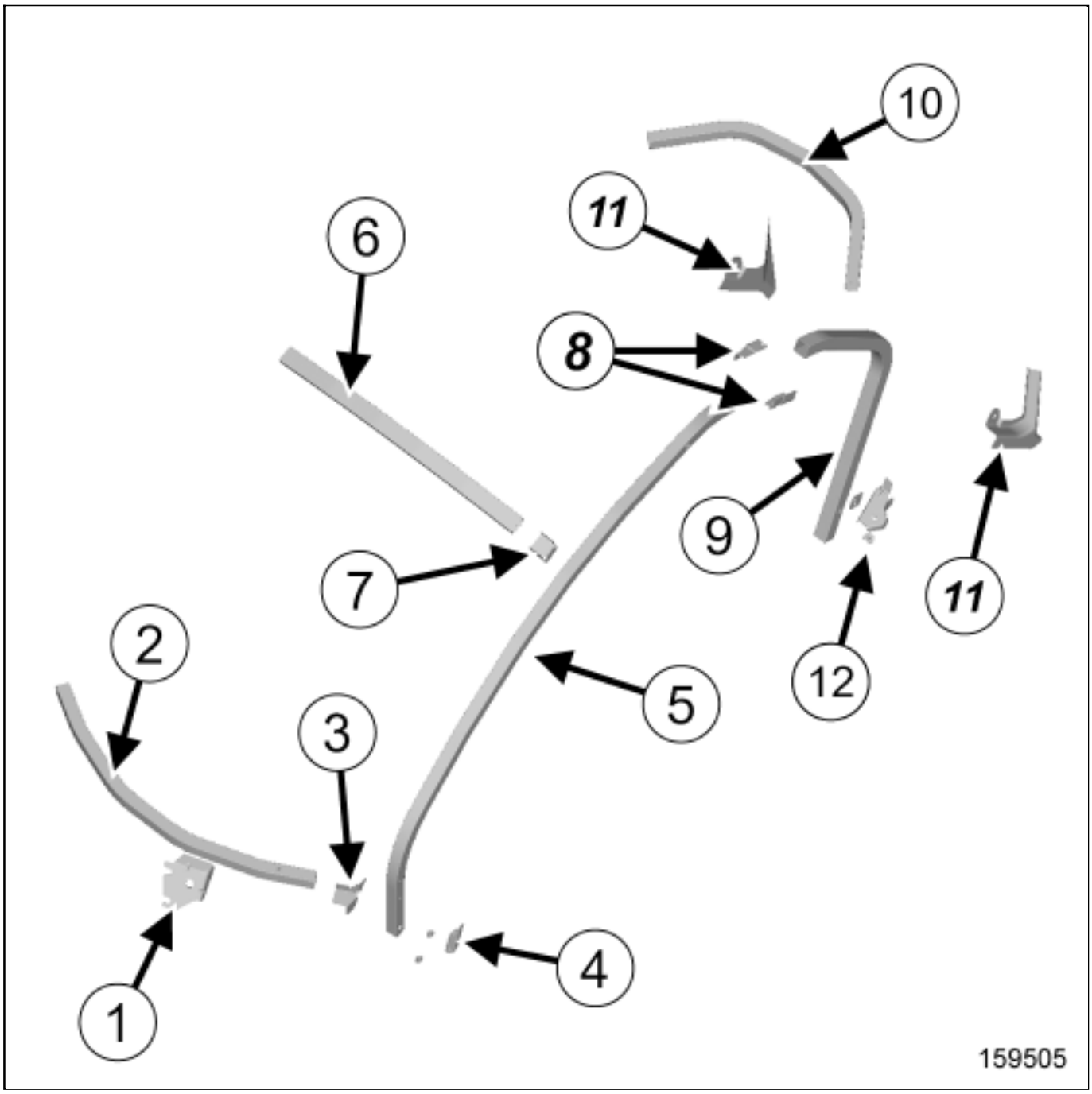
10
11
6
8
9
7
11
2
12
5
3
4
1
159505

No.	Description	Type	Thickness (mm)
(1)	Wiper motor bracket	XES	2
(2)	Windscreen aperture lower cross member	TSE	1
(3)	Windscreen aperture lower cross member reinforcement	XES	1.5
(4)	Door mirror support	XES	3
(5)	Front side roof rail	TSE	1.2
(6)	Roof front cross member	TSE	1
(7)	Roof front cross member reinforcement	XES	1.5
(8)	Side roof rail reinforcement	XES	2
(9)	Rear side roof rail	TSE	1.2
(10)	Roof rear cross member	TSE	1
(11)	Seat belt anchorage supports	XE	2.5
(12)	Door striker plate mounting	XES	2

2. IN THE EVENT OF REPLACEMENT

- The option for replacing this part is as follows:
  - complete replacement.

CAUTION

If the mating faces of the parts to be welded are not accessible, make EGW plug welds to replace the original resistance welds (see MR 400).

1- POSITION OF ELECTRIC EARTHS

CAUTION

To avoid damaging the vehicles electric and electronic components, the earths of any wiring harness near the weld area must be disconnected.

Position the earth of the welding machine as close as possible to the weld area (see MR 400).

Locate the earths located near to the weld areaEarths on body: List and location of components .

2- COMPLETE REPLACEMENT

Note:

The repair bench does not have to be used, on condition that the side members have not been affected by the impact.

PART IN POSITION

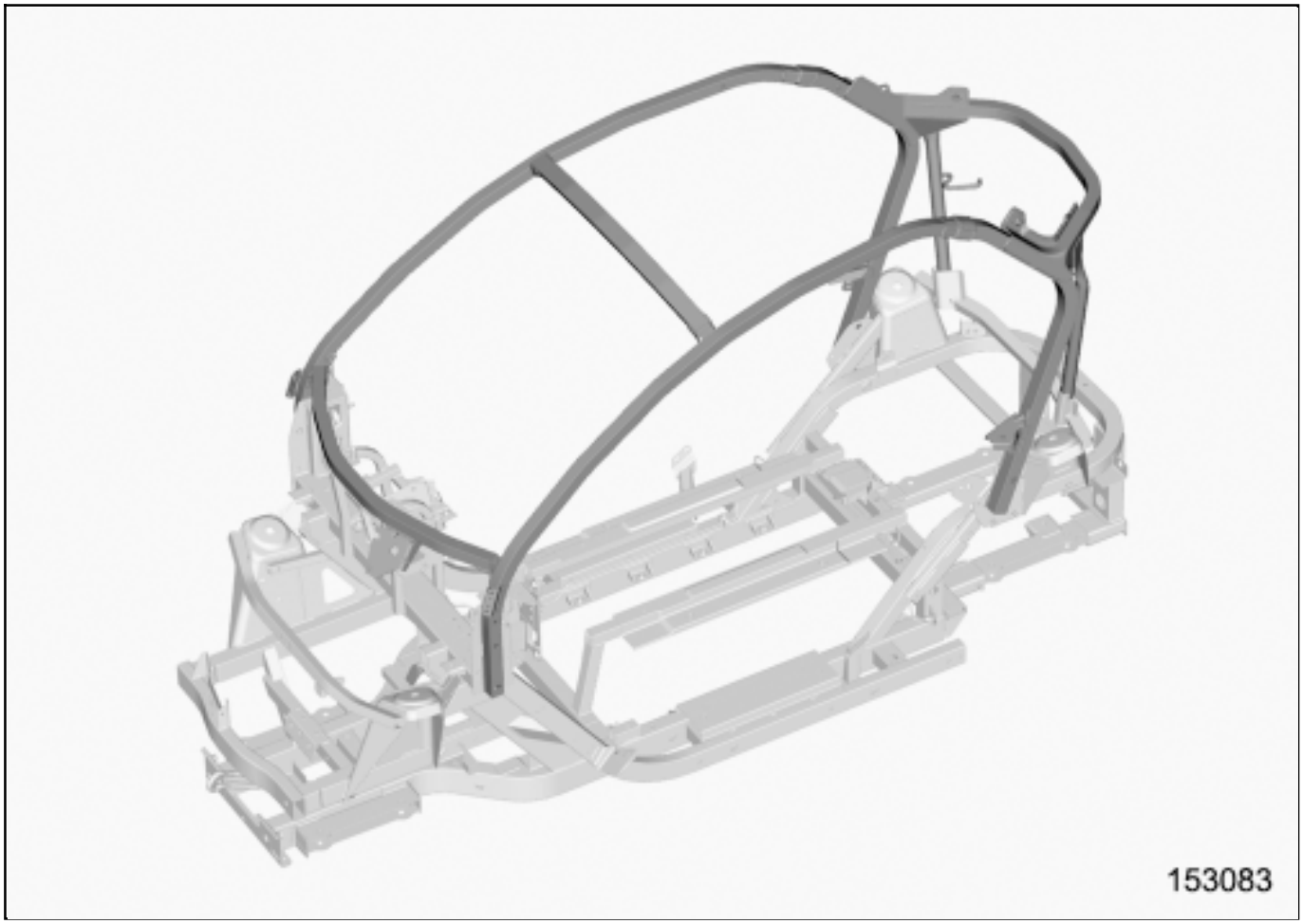

3- POSITION OF THE SPARE PART

AT THE REAR SECTION

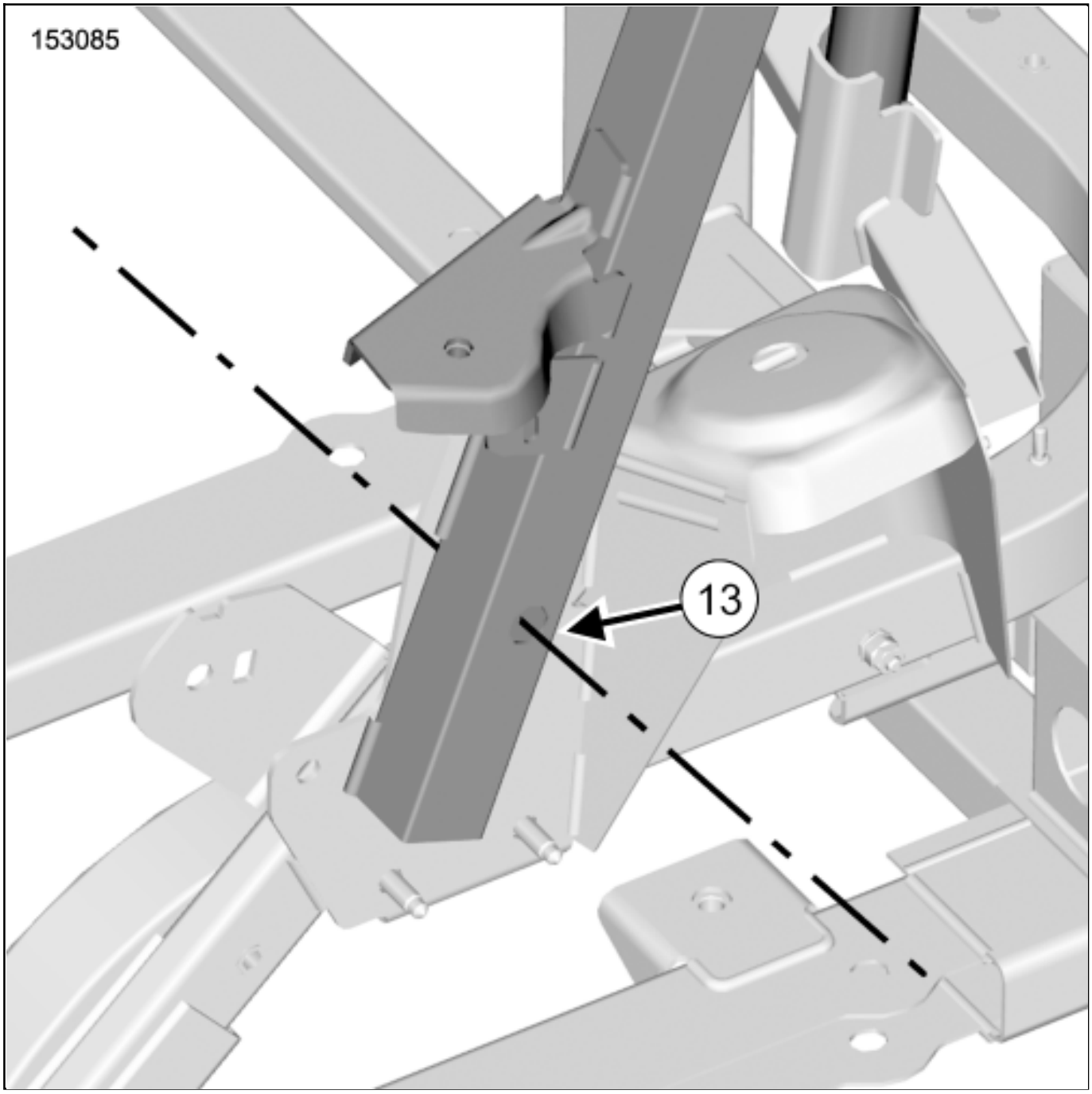

To position the part at the rear section, use the pilote holes(13) 12 mm diameter.

AT THE FRONT SECTION

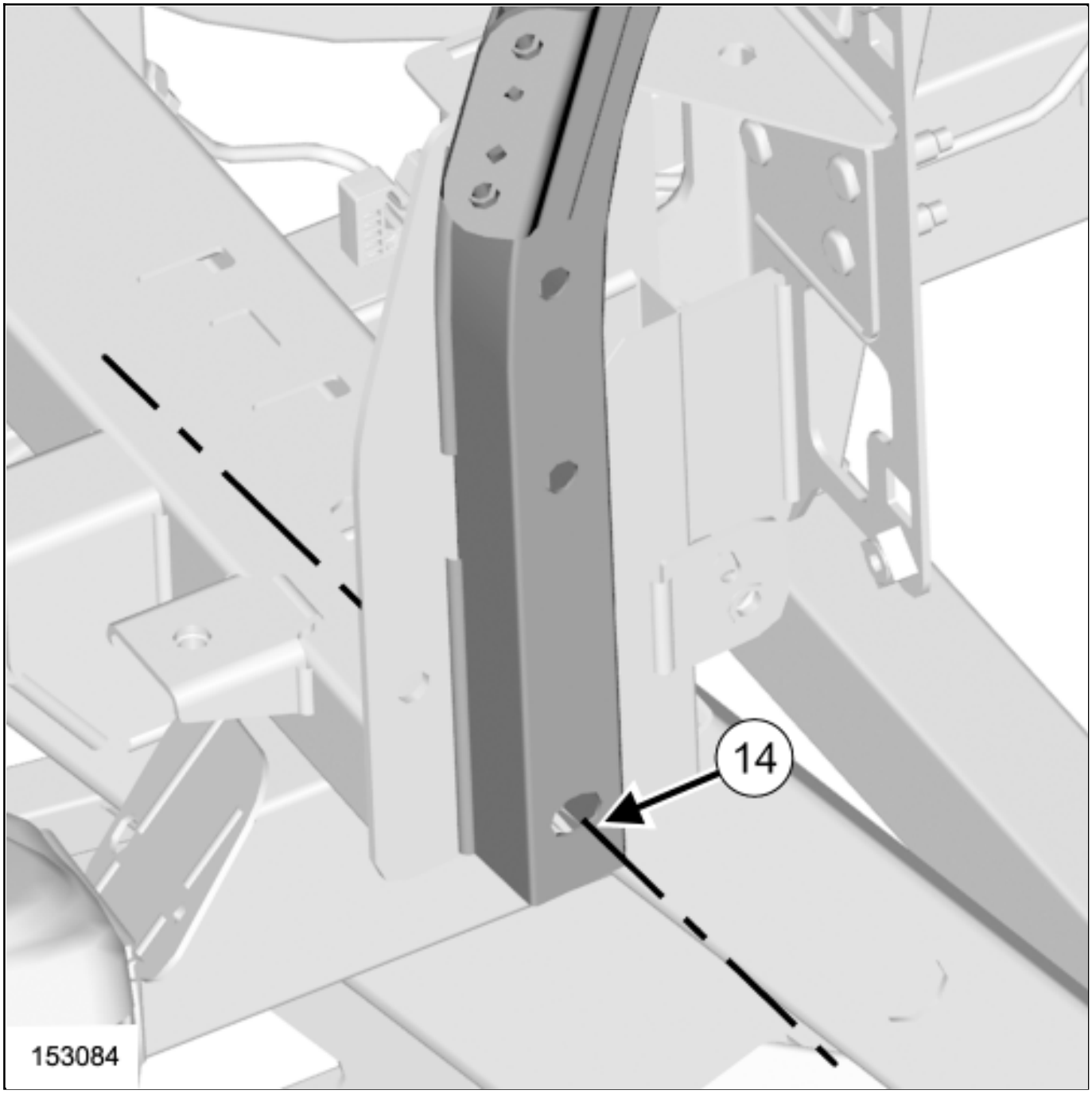

To position the part at the front section, use the pilote holes(14) 12 mm diameter.

ROOF:REPLACEMENT

Note, one or more warnings are present in this procedure

WARNING

To avoid all risk of damage to the systems, apply the safety and cleanliness instructions and operation recommendations before carrying out any repair:

Vehicle: Precautions for the repair .

1. REMOVAL PREPARATION OPERATION

Remove the front bumper upper strip Exterior body front trim assembly: Exploded view .

Remove Exterior body side trim assembly: Exploded view :

- the A-pillar trims,
- the B-pillar trims,
- the roof front section trims.

Remove the roof rear section Exterior body rear trim assembly: Exploded view .

Remove the rear headlining Interior body side trim assembly: Exploded view .

Remove Roof trim assembly: Exploded view :

- the roof rear cross member trim,
- the roof front cross member trim.

Remove:

- the fixed glass roof seal,
- the seal between the fixed glass roof and the windscreen.

Protect:

- the vehicle interior,
- the edge of the roof with masking tape.

2. REMOVAL OPERATION

Cut the cement bead Window bonding tool: Use and Window detachment: Description .

3. REFITTING PREPARATION OPERATION

For preparation and bonding Products for preparing and bonding windows: Description .

4. REFITTING OPERATION

BONDING AREA

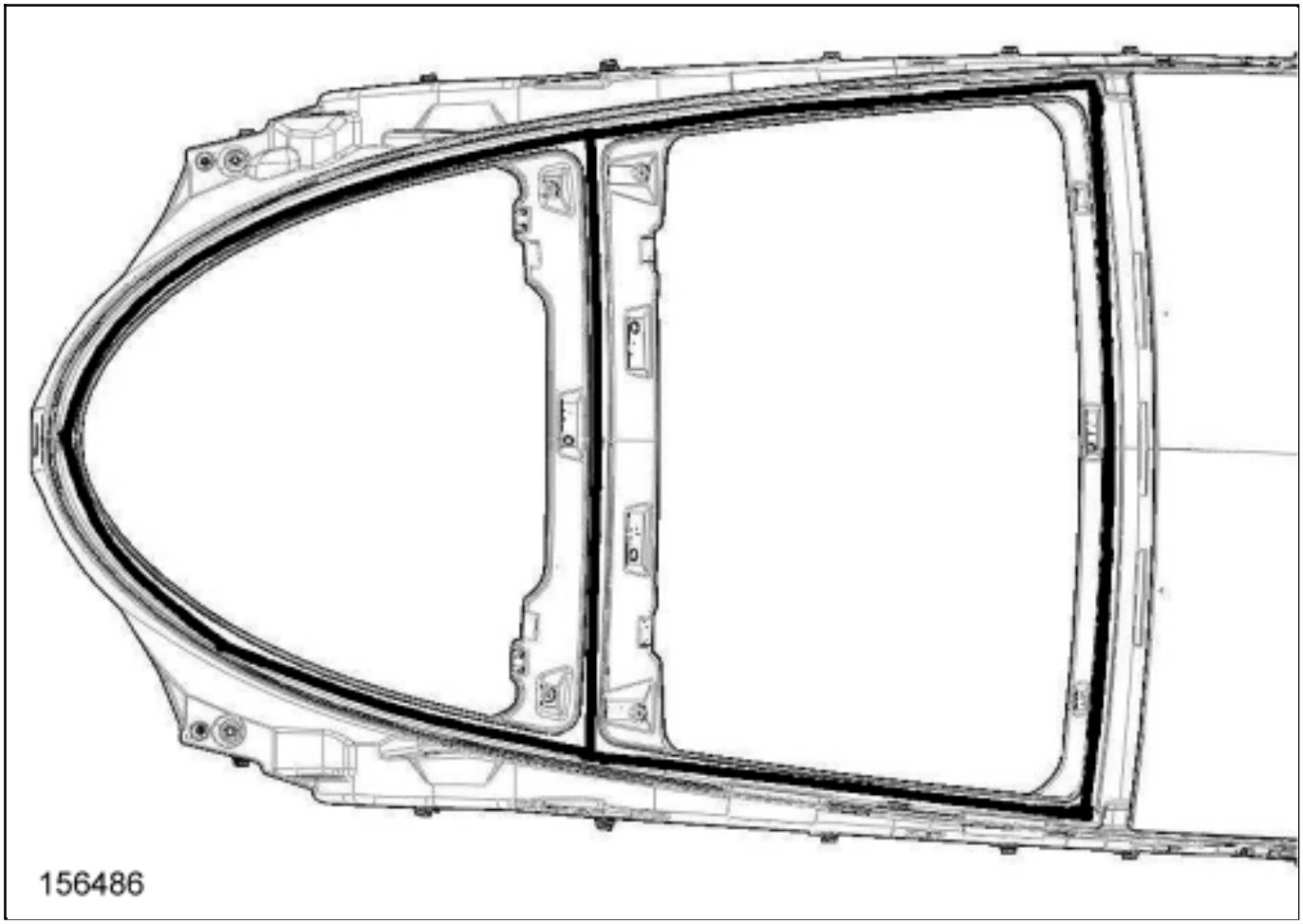

Note:

Apply the cement bead on the vehicle.

Bond the roof panel[Window bonding: Description] .

Note:

This operation requires two operators.

Place the rear notch of the prepared roof panel against the rib of the roof arch panel.

Position the prepared roof panel on the front section of the roof arch panel using the lateral ribs.

Apply pressure to the periphery and the roof rear cross member to ensure the crushing of the cement bead.

5. FINAL OPERATION

Proceed in the reverse order to removal.

Repair-40x07x02-02x49-1-10-1.xml

XSL version : 3.02 du 22/07/11

ROOF TRIM ASSEMBLY: EXPLODED VIEW

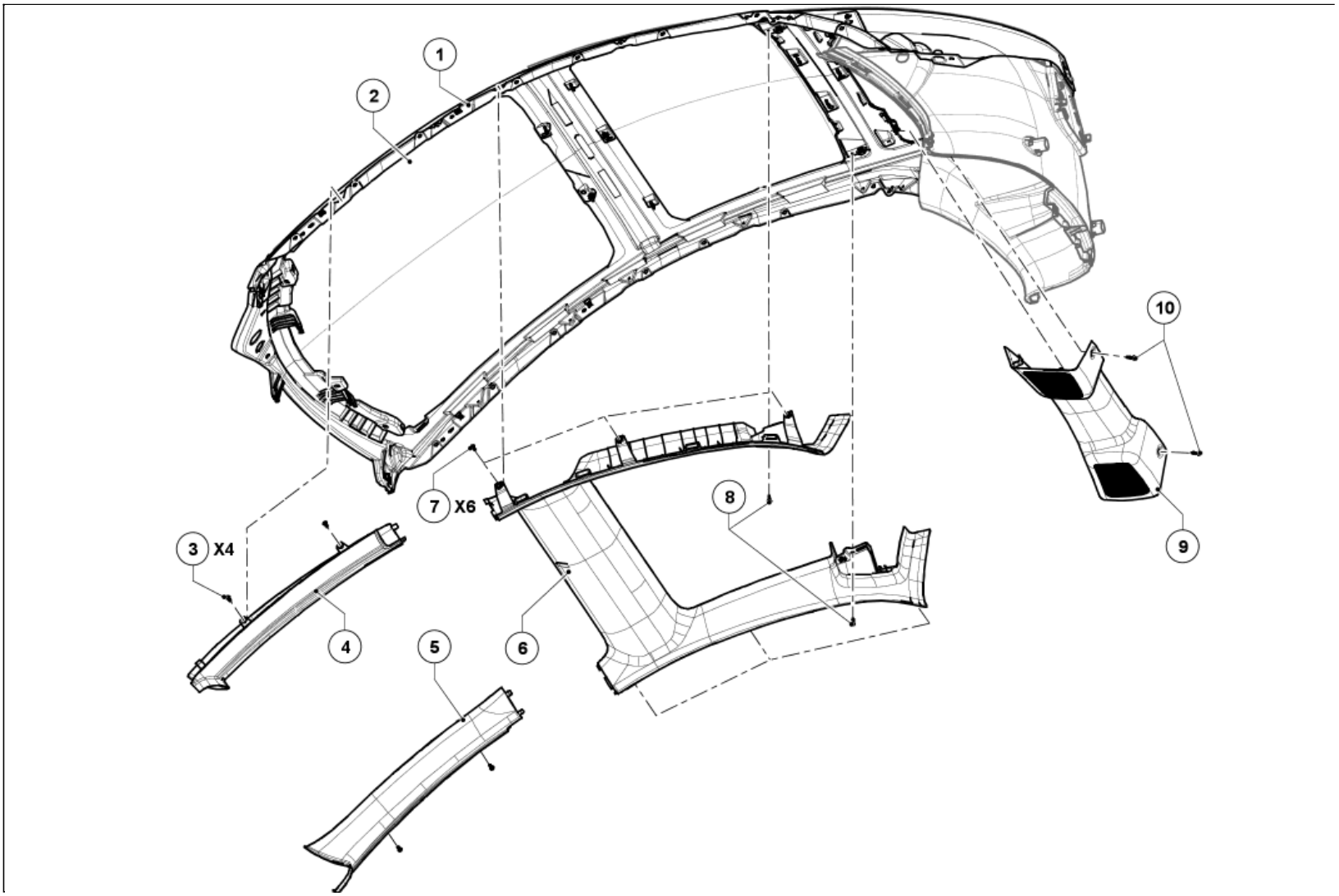

Illustration key: Description .

For fastenings with no specified tightening torque values, refer to the Table of Standard TorquesTightening torques: General information .

Marks	Designations	Informations
1	Roof panel arch	Roof panel arch: Removal - Refitting
2	Windscreen	Windscreen: Removal - Refitting
3	Windscreen pillar trim screws	
4	Right-hand windscreen pillar trim	Vehicle trim : Removal - Refitting
5	Left-hand windscreen pillar trim	Vehicle trim : Removal - Refitting
6	Roof front cross member trim	Vehicle trim : Removal - Refitting
7	Roof front cross member trim screws	
8	Roof front cross member trim screws	
9	Roof rear cross member trim	Vehicle trim : Removal - Refitting
10	Roof rear cross member trim screws	

Repair-70x02x04x01-02x50-1-2-1.xml

XSL version : 3.02 du 22/07/11

ROTARYSWITCH:ADJUSTMENT

Note, one or more warnings are present in this procedure

WARNING

To avoid all risk of damage to the systems, apply the safety and cleanliness instructions and operation recommendations before carrying out any repair:

- (see 84A, Control - Signals, Control - Signals: Precautions for repair) ,
- Vehicle: Precautions for the repair .

This method is used to put the rotary switch in the neutral position.

1. PRELIMINARY CONDITIONS FOR THE ADJUSTMENTS

- The wheels are set straight ahead.
- The rotary switch is refitted on the steering column.
- The steering wheel is removed.

2. ADJUSTMENT

Note:

Certain rotary switch models are equipped with a locking device.

To perform the adjustment, it is essential to unlock the rotary switch when handling.

- Turn the movable part of the rotary switch fully to the left.
- Turn the movable part of the rotary switch fully to the right, counting the number of turns.
- Divide the number of turns counted by 2.
- Turn the movable part of the rotary switch to the left by the number of turns calculated.
- The rotary switch is now within the turn of its neutral position.

Example:

5 turns were counted between the full left and full right position of the rotary switch.

Turn the movable stop of the switch 2.5 turns to the left to find neutral again.

- Continue the rotation until the marks are aligned.
- The switch is now in the neutral position.

ROTARY SWITCH: REMOVAL - REFITTING

Note, one or more warnings are present in this procedure

Equipment required
Diagnostic tool

WARNING

To avoid all risk of damage to the systems, apply the safety and cleanliness instructions and operation recommendations before carrying out any repair:

Vehicle: Precautions for the repair .

Localisation and specification (tightening, torques, parts always to be replaced)Dashboard assembly: Exploded view .

REMOVAL

1. REMOVAL PREPARATION OPERATION

WARNING

To avoid any risk of triggering when working on or near a pyrotechnic component (airbags or pretensioners), lock the airbag computer using the diagnostic tool.

When this function is activated, all the trigger lines are inhibited and the airbag warning light on the instrument panel lights up continuously (ignition on).

Lock the airbag computer using the Diagnostic tool(see Fault finding - Replacement of components) (88C, Airbags and pretensioners).

WARNING

DANGER : Risk of serious injuries due to the short-circuiting or the untimely triggering of an electrical system (pyrotechnical parts, windscreen wiper motor, electric fan, etc.) following possible loopback of the 12-volt supply circuit by the voltage transformer.

Please adhere to the instructions regarding cut-off of the 12-volt supply circuit.

If the procedure fails, do not continue with your task and ask an employee who is qualified and authorized to work on a high-voltage onboard network to perform a diagnostic Vehicle: Precautions for the repair .

Disconnect the 12V supply circuit12 V supply circuit : Lockout - Removal of lockout .

Remove:

- the driver's frontal airbagDriver's frontal airbag: Removal - Refitting ,
- the steering wheelSteering assembly: Exploded view ,
- the steering wheel coverDashboard assembly: Exploded view .

2. REMOVAL OPERATION

Loosen the rotary switch screwDashboard assembly: Exploded view .

Remove the rotary switch assemblyDashboard assembly: Exploded view .

Disconnect the connectors.

1- IN THE EVENT OF REPLACEMENT

Remove Dashboard assembly: Exploded view :

- the signal and lighting switch,
- the screen wiper switch.

REFITTING

1. REFITTING OPERATION

- Proceed in the reverse order to removal.

2. FINAL OPERATION

- Connect the 12V supply circuit12 V supply circuit : Lockout - Removal of lockout .
- Unlock the airbag computer using the Diagnostic tool(see Fault finding - Replacement of components) (88C, Airbags and pretensioners).

Repair-30x04x03x33-01x37-1-21-1.xml

XSL version : 3.02 du 22/07/11

ROTOR POSITION SENSOR: REMOVAL - REFITTING

Note, one or more warnings are present in this procedure

Equipment required
Diagnostic tool

WARNING

To avoid all risk of damage to the systems, apply the safety and cleanliness instructions and operation recommendations before carrying out any repair:

- Wiring: Precautions for the repair ,
- Vehicle: Precautions for the repair .

CAUTION

To prevent contamination of disconnected connectors and sockets, hermetically seal the connectors and sockets using a plastic bag and a securing clip. For traction battery sockets, use traction battery caps (see Vehicle: Parts and consumables for the repair)

Vehicle: Parts and consumables for the repair

Location and specification (tightening torques, parts always to be replaced, etc.)Traction motor assembly: Exploded view .

REMOVAL

1. REMONVAL PREPARATION OPERATION

Position the vehicle on a two-post lift Vehicle: Towing and lifting .

WARNING

DANGER: HIGH VOLTAGE VEHICLE.

Risks of serious burns or electric shock that may prove fatal.

Before carrying out any work on the vehicle, it is essential that you adhere to the instructions regarding vehicle voltage cut-off. This work must be carried out by an employee who is qualified and authorized to work on a high-voltage onboard network Vehicle: Precautions for the repair .

Remove the lockout of the vehicle Vehicle: Lockout - Removal of lockout .

2. REMOVAL OPERATION

Disconnect the rotor position sensor connector.

Remove Traction motor assembly: Exploded view :

- the rotor position sensor bolt,
- the rotor position sensor.

Protect the connectors and sockets Wiring: Precautions for the repair .

REFITTING

1. REFITTING OPERATION

Proceed in the reverse order to removal.

2. FINAL OPERATION

- Lockout the vehicle**Vehicle: Lockout - Removal of lockout** .

- Carry out the necessary operations using the Diagnostic toolsee (Fault finding - Replacement of components) (83A, Instrument panel).

Repair-14x01x01x01-01x37-1-2-1.xml

XSL version : 3.02 du 22/07/11

TECHNICAL NOTE

EDITION ANGLAISE

77 11 301 842
DECEMBER 2000

3485A
Service 0422

All types

Type	S/Section
XXX X	04

This note cancels and replaces Technical Note n°3452A

04 SERVICING PROGRAMME

- Engine: **XXX**
- Gearbox: **XXX**

Basic manual:
All Workshop Repair Manuals

NEW SERVICING PROGRAMME WITH EFFECT FROM 1 JANUARY 2001

From this date, the majority of vehicles in the range will have a service interval of 18 000 miles (30 000 kilometres) (petrol and diesel engines).

This note only describes the procedures linked to this new interval; for other vehicles, refer to Technical Note 3399E.

The new servicing programme will involve the use of high technology oil complying with ACEA standards, A1, A3 or A5 for petrol engines and B3 or B4 for diesel engines.

This servicing schedule (engine oil change) requires the engine oil level to be topped up carefully during services and safety checks.

The Servicing booklet is now separate from the Warranty booklet and will be placed in vehicles on the production line.

"The repair methods given by the manufacturer in this document are based on the technical specifications current when it was prepared.

The methods may be modified as a result of changes introduced by the manufacturer in the production of the various component units and accessories from which his vehicles are constructed."

All copyrights reserved by Renault.

Copying or translating, in part or in full, of this document or use of the service part reference numbering system is forbidden without the prior written authority of Renault.

© RENAULT 2000

A SERVICE INTERVAL (.... miles (... km))

Vehicles	Interval
TWINGO	**18 000 miles (30 000 km)**
CLIO (except CLIO 2L 16V, CLIO V6, CLIO 1.9D)	**18 000 miles (30 000 km)**
KANGOO (except 1.9D)	**18 000 miles (30 000 km)**
MEGANE (except 1.9D)	**18 000 miles (30 000 km)**
SCENIC (EXCEPT 1.9D)	**18 000 miles (30 000 km)**
LAGUNA	**18 000 miles (30 000 km)**
ESPACE	**18 000 miles (30 000 km)**
AVANTIME	**18 000 miles (30 000 km)**
MASTER (2.2 dCi)	**18 000 miles (30 000 km)**
CLIO (2L 16V and V6)	**12 000 miles (20 000 km)** (see Technical Note 3399E)
MASTER (1.9 dTi and 2.8 dTi)	**12 000 miles (20 000 km)** (see Technical Note 3399E)
CLIO (1.9D)	**9 000 miles (15 000 km)** (see Technical Note 3399E)
KANGOO (1.9D)	**9 000 miles (15 000 km)** (see Technical Note 3399E)
MEGANE (1.9D)	**9 000 miles (15 000 km)** (see Technical Note 3399E)
SCENIC (1.9D)	**9 000 miles (15 000 km)** (see Technical Note 3399E)

Or every 2 YEARS depending on which is reached first.

B SERVICE INTERVAL (.... miles (....km))

	Interval
ALL VEHICLE TYPES	**36 000 miles (60 000 km)**

THE RECOMMENDED SERVICE PLAN FOR THE NEW 18 000 mile (30 000 km) SERVICING POLICY IS AS FOLLOWS:

- A free Renault safety check after **6 000 miles (10 000 km)** or **6 months**.
- An A service after **18 000 miles (30 000 km)** or **2 years**.
- A free Renault safety check after **28 000 miles (45 000 km)** or **3 years**.
- A B service after **36 000 miles (60 000 km)** or **4 years**.
- A free Renault safety check after **45 000 miles (75 000 km)** or **5 years**.
- An A service after **55 000 miles (90 000 km)** or **6 years**.
- A free Renault safety check after **63 000 miles (105 000 km)** or **7 years**.
- A B service after **75 000 miles (120 000 km)** or **8 years**.

and so on...
Whichever deadline is reached first.

Renault safety checks (except the first) are only free if the preceding service was carried out by the Renault network.

Complete all the coupons in the Servicing booklet correctly to avoid any dispute.

The first visit to Renault (free)

This visit enables the Renault network to carry out various checks and top up various fluids (details on page 04-4).

The second and subsequent Renault visits (free)

This visit has the same principles as the first visit. It is carried out free by the Renault network **9 000 miles (15 000 km)** or **1 year** after the last service if it was carried out by the Renault network (the corresponding coupon must be filled in) (details on page 04-4).

The A service

During this service, service operations and parts replacement will be carried out, depending on the mileage of your vehicle.
The A service is based on a list of operations including an oil change, replacement of the oil filter, inspections and topping up the levels (details on page 04 - 5).
Added to this list are extra operations that are carried out at the appropriate times, as set out on page 04 - 6.

The B service

This service follows the same principles as the A service, but the operations list is longer as more checks are carried out. The list includes an oil change and a road test as well as specific checks and topping up (details on page 04 - 5).

Added to this list are extra operations that are carried out at the appropriate times, as set out on page 04 - 6.

OPERATIONS FOR THE 1st RENAULT SAFETY CHECK

Listed below are the operations carried out during the first (free) Renault safety check, scheduled for when the car has been driven **6 000 miles (10 000 km)** or after 6 months (whichever is reached first):

- Top up the engine oil (up to **2.l**).
- Top up the washer fluid (up to **2 l**).
- Check the coolant level.
- Check the brake fluid level.
- Check the power steering fluid level.
- Check the condition of the windscreen.
- Check the condition of the rear-view mirrors.
- Check the wiper blades.
- Check the indicator lights.
- Check the condition and pressure of the tyres.
- Visual inspection of shock absorbers.
- Computer fault finding.

OPERATIONS FOR THE 2nd AND SUBSEQUENT RENAULT SAFETY CHECKS

Listed below are operations carried out on any subsequent (free*) visits to Renault safety checks:

- Top up the engine oil (up to **2.l**).
- Top up the washer fluid (up to **2 l**).
- Check the coolant level.
- Check the brake fluid level.
- Check the power steering fluid level.
- Check the condition of the windscreen.
- Check the condition of the rear-view mirrors.
- Check the wiper blades.
- Check the indicator lights.
- Check the condition and pressure of the tyres.
- Check the brake pads.
- Visual inspection of shock absorbers.

* These checks are only free on the condition that the previous service was carried out by the Renault network.

SERVICE OPERATIONS (PETROL AND DIESEL ENGINES)

THE A * SERVICE	THE B * SERVICE	OPERATIONS
☐	☐	**Body** – Examination of underside of the car, wheel arches, doors and windows...
☐ ☐ ☐	☐ ☐ ☐	**Engine** – Oil change. – Replacement of oil filter. – Visual inspection of exhaust pipe
☐ ☐	☐ ☐ ☐ ☐	**Brakes** – Visual inspection of pads. – Circuit tightness. – Check the brake fluid level. – Check condition of trim and remove dust (including removal/refitting drums).
☐ ☐ ☐ ☐ ☐	☐ ☐ ☐ ☐ ☐	**Check fluid levels and tightness of circuits** – Hydraulic clutch. – Power assisted steering. – Front/rear screen washers. – Coolant circuit. – Sequential gearbox hydraulic unit (TWINGO)
	☐	**Steering/front and rear axle geometry** – Check ball joint play - Condition of rubber gaiters.
☐ ☐	☐ ☐	**Tyres** – Check condition and pressure of tyres (including spare wheel). – Visual inspection and tightness check of front and rear shock absorbers.
☐ ☐ ☐ ☐	☐ ☐ ☐ ☐	**Equipment** – Check bulbs (headlights, indicators, brakelights). – Check condition of the car battery (1). – Check the condition of the windscreen and rear-view mirrors. – Check condition of front and rear wiper blades.
☐	☐ ☐	**Delivery** – Check safety and service labels are in correct positions. – Road test.

*** N.B.: services are compulsory during the car's warranty period and for all cars under the Service Contract.**

(1) if possible, this battery check will be carried out using the MIDTRONICS tool.

OPERATIONS ADDITIONAL TO THE A AND B SERVICES

Components to be replaced (every ... miles/km)

PETROL engines	SPARK PLUG	AIR FILTER (1)	PARTICLE FILTER (if fitted)
TWINGO	36 000 miles (60 000 km)	18 000 miles (30 000 km)	-
CLIO (not 2L 16V or V6)	36 000 miles (60 000 km)	18 000 miles (30 000 km)	18 000 miles (30 000 km)
KANGOO	36 000 miles (60 000 km)	18 000 miles (30 000 km)	18 000 miles (30 000 km)
MEGANE (not 2L 16V IDE)	36 000 miles (60 000 km)	36 000 miles (60 000 km)	18 000 miles (30 000 km)
MEGANE 2L 16V IDE	18 000 miles (30 000 km)	36 000 miles (60 000 km)	18 000 miles (30 000 km)
SCENIC	36 000 miles (60 000 km)	36 000 miles (60 000 km)	18 000 miles (30 000 km)
LAGUNA (not V6 24V)	36 000 miles (60 000 km)	36 000 miles (60 000 km)	18 000 miles (30 000 km)
LAGUNA V6 24V	75 000 miles (120 000 km)	36 000 miles (60 000 km)	18 000 miles (30 000 km)
ESPACE (not V6 24V)	36 000 miles (60 000 km)	18 000 miles (30 000 km)	18 000 miles (30 000 km)
ESPACE V6 24V	75 000 miles (120 000 km)	18 000 miles (30 000 km)	18 000 miles (30 000 km)
AVANTIME 2L 16V	36 000 miles (60 000 km)	18 000 miles (30 000 km)	18 000 miles (30 000 km)
AVANTIME V6 24V	75 000 miles (120 000 km)	18 000 miles (30 000 km)	18 000 miles (30 000 km)

Components to be replaced (every ... miles/km)

DIESEL engines	AIR FILTER (1)	PARTICLE FILTER (if fitted)
CLIO (not 1.9D)	18 000 miles (30 000 km)	18 000 miles (30 000 km)
KANGOO (except 1.9D)	18 000 miles (30 000 km)	18 000 miles (30 000 km)
MEGANE (except 1.9D)	18 000 miles (30 000 km)	18 000 miles (30 000 km)
SCENIC (not 1.9D)	18 000 miles (30 000 km)	18 000 miles (30 000 km)
LAGUNA	36 000 miles (60 000 km)	18 000 miles (30 000 km)
ESPACE	18 000 miles (30 000 km)	18 000 miles (30 000 km)
MASTER 2.2 dCi	36 000 miles (60 000 km)	18 000 miles (30 000 km)

(1) or every **4 years** whichever is reached first.

OPERATIONS ADDITIONAL TO THE A AND B SERVICES

PETROL and DIESEL engines

Components to be replaced (every ...)

Timing belt (1)	petrol and diesel engines: 75 000 miles (120 000 km) or 5 years. N.B.: 45 000 miles (75 000 km) or 5 years for 1.9 dTi diesel engines
Accessories belt	petrol and diesel engines: 75 000 miles (120 000 km) or 5 years. N.B.: 45 000 miles (75 000 km) or 5 years for 1.9 dTi diesel engines
Fuel filters (petrol and diesel)	36 000 miles (60 000 km). N.B.: 95 000 miles (150 000 km) for the petrol engine Laguna and 75 000 miles (120 000 km) for the Avantime The diesel filter must have any water drained from it if it is not replaced during the course of the service
Brake fluid	75 000 miles (120 000 km) or every 4 years
Remote control door locking batteries *	Every 2 years
Air conditioning circuit *; check and top up refrigerant fluid	Every 4 years
Coolant	75 000 miles (120 000 km) or every 4 years
Tyre pressure monitoring system batteries *	Every 10 years
Air bags and pretensioners pyrotechnic system	Every 10 years

* if fitted

(1) Belts

The mileages and intervals for belt replacement listed above must be respected. The customer should consult his nearest Renault Dealer for advice on when a timing belt should be replaced depending on his individual driving style and how he uses the car. This is particularly important when the car is being used for:
– constant door to door journeys,
– urban driving,
– repeated short journeys, with cold engine at low temperatures, etc.

ADDITIONAL OPERATIONS TO BE CARRIED OUT DURING SERVICING

Servicing periods are the same for LPG-equipped cars as those for equivalent models with petrol engines.

Also:

All services must include:
– a check on the safety solenoid valve,
– a check for the presence of a blanking cover on the pressure relief valve.

All services must include:
– a gas filter change.

Every eight years:
– a hydraulic test must be performed on the LPG tank.

Vehicles	Replace spark plugs	Check/adjust the valve clearances
KANGOO - CLIO II - TWINGO - ESPACE	every 18 000 miles (30 000 km)	every 18 000 miles (30 000 km) except for 16V engines

CHECKING THE OIL LEVEL

Renault engines are designed and built to the highest technological standards, and naturally need a little oil for optimum running.

For this reason, and to avoid any potential engine failure, the engine oil level must be **regularly checked** in particular before long journeys.

It may be necessary to top up the oil once or twice between changes and especially during the running in period; **do this when the oil is level with the minimum mark on the gauge.**

The level should be checked with the car on a flat surface, with the engine stopped and cold (e.g.: before the engine is started for the first time of the day).

Let the oil settle after refilling (approximately **2 minutes**), (**15 minutes** for Master vehicles) before checking the level with the dipstick.

It is very important not to exceed the maximum mark on the gauge (in this case oil consumption is greater; it can also cause engine damage).

The service has been designed for regular use of your vehicle.

In the event of use in certain difficult conditions, such as:
– constant door to door journeys,
– urban driving,
– repeated short journeys, with cold engine at low temperatures, etc.
Renault recommends that your oil is changed every **9 000 miles (or 15 000 km)** or at least once a year.

Only ACEA standard oils may be used for an **18 000 mile (30 000 km)** change interval.

The tables below show the oil grades which must be used to ensure correct operation of the engine (for European Union countries and Turkey):

PETROL ENGINE

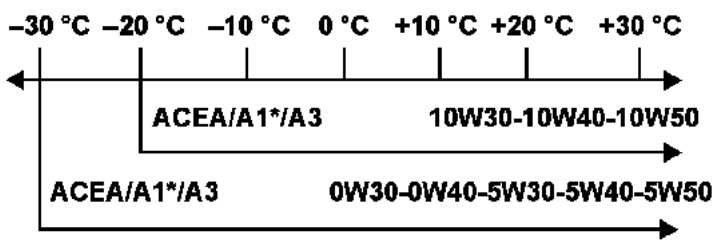

* Oil for fuel economy. This type of oil is not recommended for 2L 16V F4R Renault Sport engines.

DIESEL ENGINE

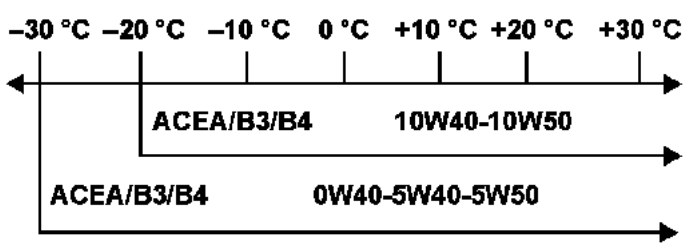

ACEA B1 (diesel) oils must not be used for diesel engines.

ACEA A1 oils (petrol) allow a reduction in fuel consumption, Renault recommends this oil for all engines with the exception of the 2L 16V Renault Sport.

Observe the recommendation on the label located on the engine for diesel vehicles with automatic gearboxes.

SHOCK ABSORBER: REMOVAL - REFITTING

Note, one or more warnings are present in this procedure

Location and specifications (tightening torques, parts always replaced, etc.)(see 33A, Rear axle components, Rear axle assembly: Exploded view) .

WARNING

To avoid all risk of damage to the systems, apply the safety and cleanliness instructions and operation recommendations before carrying out any repair:

(see 33A, Rear axle components, Rear axle assembly: Exploded view) ,

CAUTION

In order not to damage the brake hose:

- do not tension the hose,
- do not twist the hose,
- check that there is no contact with the surrounding components.

Note:

The shock absorber is not available as a retail replacement part. It is necessary to replace the spring and shock absorber assembly.

REMOVAL

1. REMOVAL PREPARATION OPERATION

- Position the vehicle on a two-post lift Vehicle: Towing and lifting .
- Remove the retaining calliper support bolt on each side (see 33A, Rear axle components, Rear axle assembly: Exploded view) .
- Remove the brake pads (see 33A, Rear axle components, Rear axle assembly: Exploded view) .
- Unclip the handbrake cable (see 33A, Rear axle components, Rear axle assembly: Exploded view) .
- Remove the brake hose on each side (see **Rear brake hose: Removal - Refitting**) .
- Remove the left-hand and right-hand wheel arch liner Exterior body side trim assembly: Exploded view .

2. REMOVAL OPERATION

- Remove the shock absorber base bolts on each side.

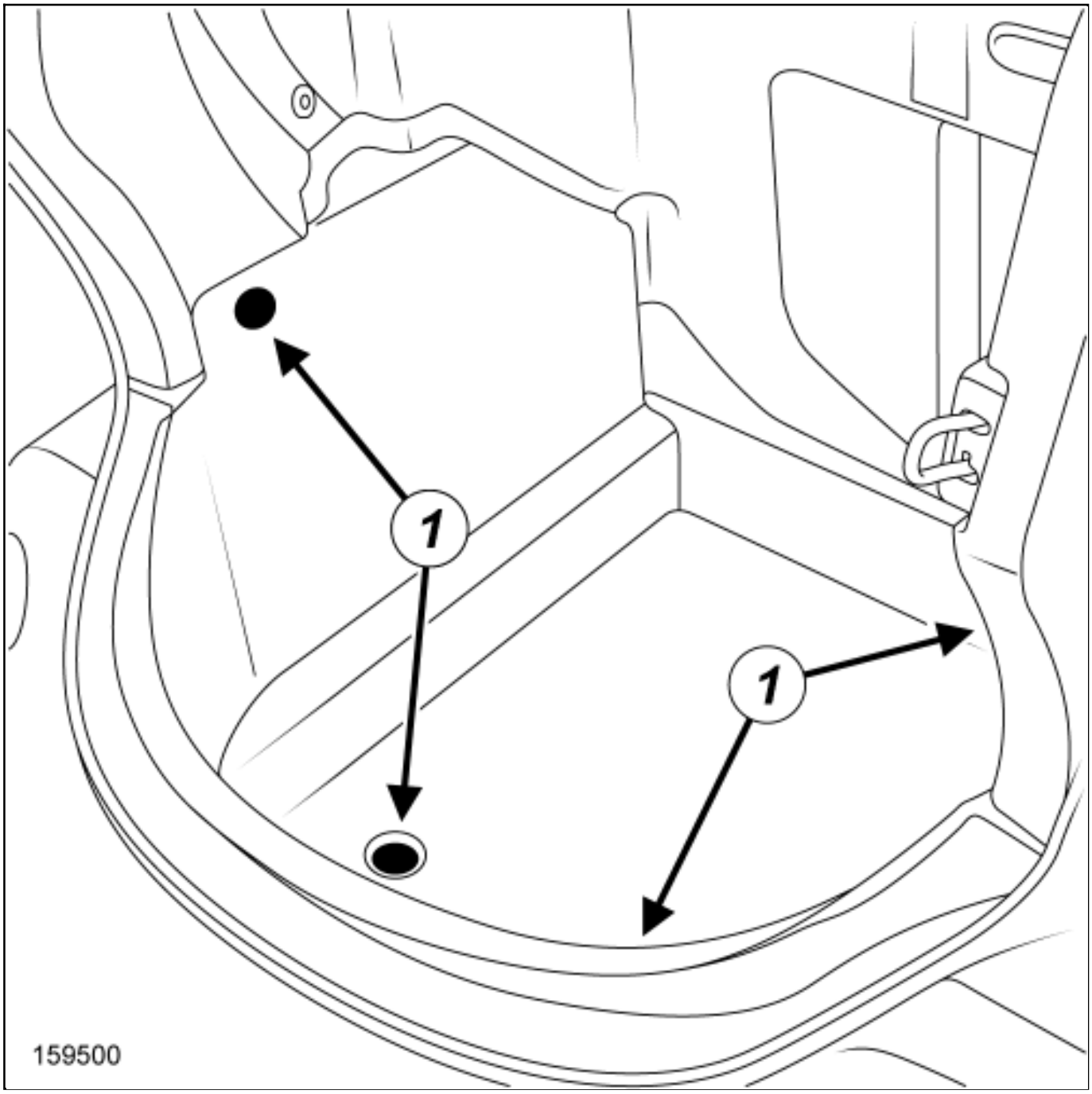
1
1
159500

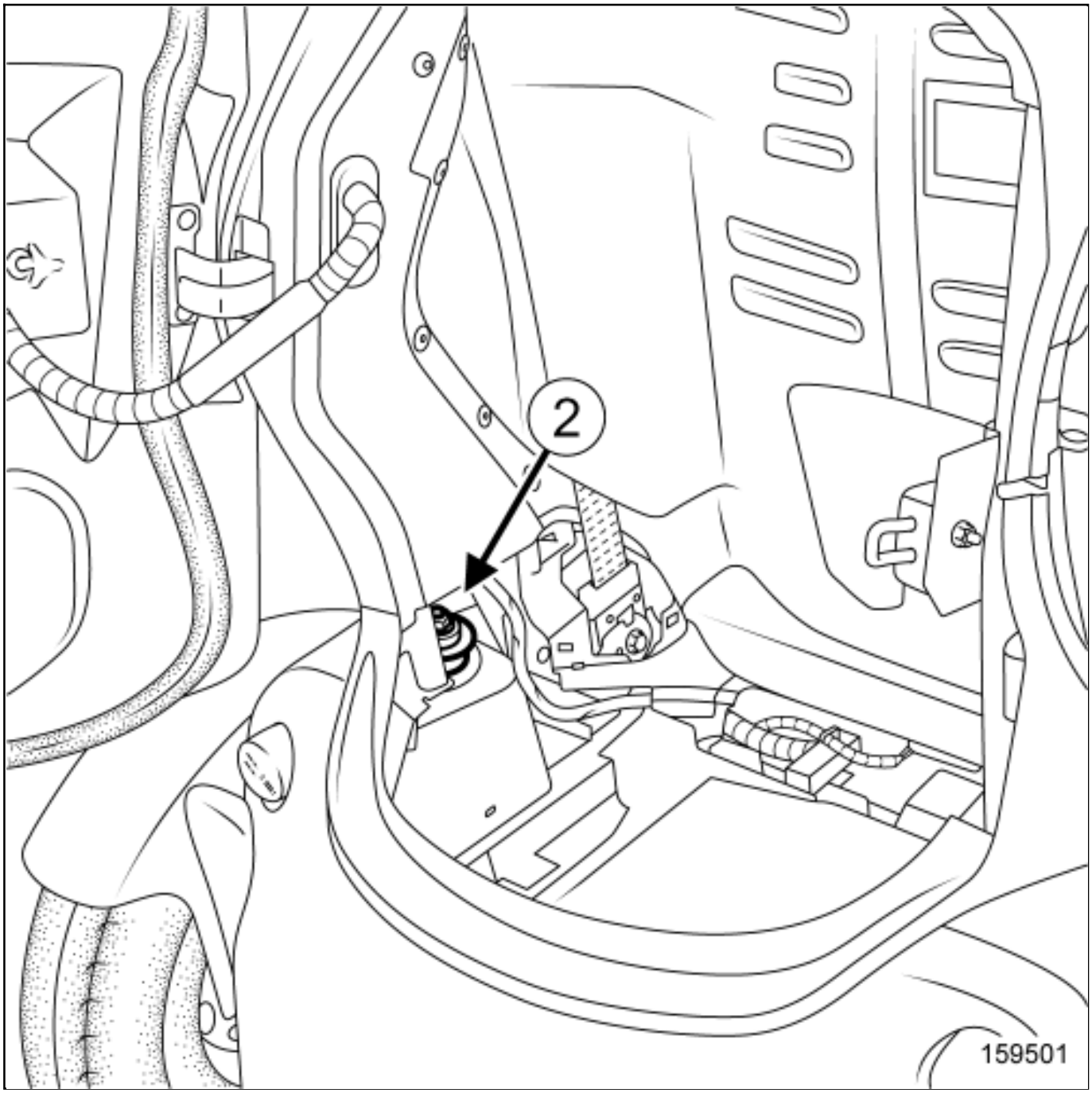

Remove:

- the luggage compartment floor clips,
- the luggage compartment floor trim(1) ,
- the shock absorber upper mounting on each side(2) ,
- the shock absorber on each side(see 33A, Rear axle components, Rear axle assembly: Exploded view) ,

■

the shock absorber spring on each side(see 33A, Rear axle components, Rear axle assembly: Exploded view) .

REFITTING

❑

Proceed in the reverse order to removal.

Repair-13x02x06x09-01x37-1-36-1.xml

XSL version : 3.02 du 22/07/11

SIDEIMPACTCROSSMEMBER:REPLACEMENT

Note, one or more warnings are present in this procedure

WARNING

DANGER: HIGH VOLTAGE VEHICLE.

Risks of serious burns or electric shock that may prove fatal.

Before carrying out any work on the vehicle, it is essential that you adhere to the instructions regarding vehicle voltage cut-off. This work must be carried out by an employee who is qualified and authorized to work on a high-voltage onboard network Vehicle: Precautions for the repair .

1. COMPOSITION OF THE SPARE PART

WITH SIDE DOORS

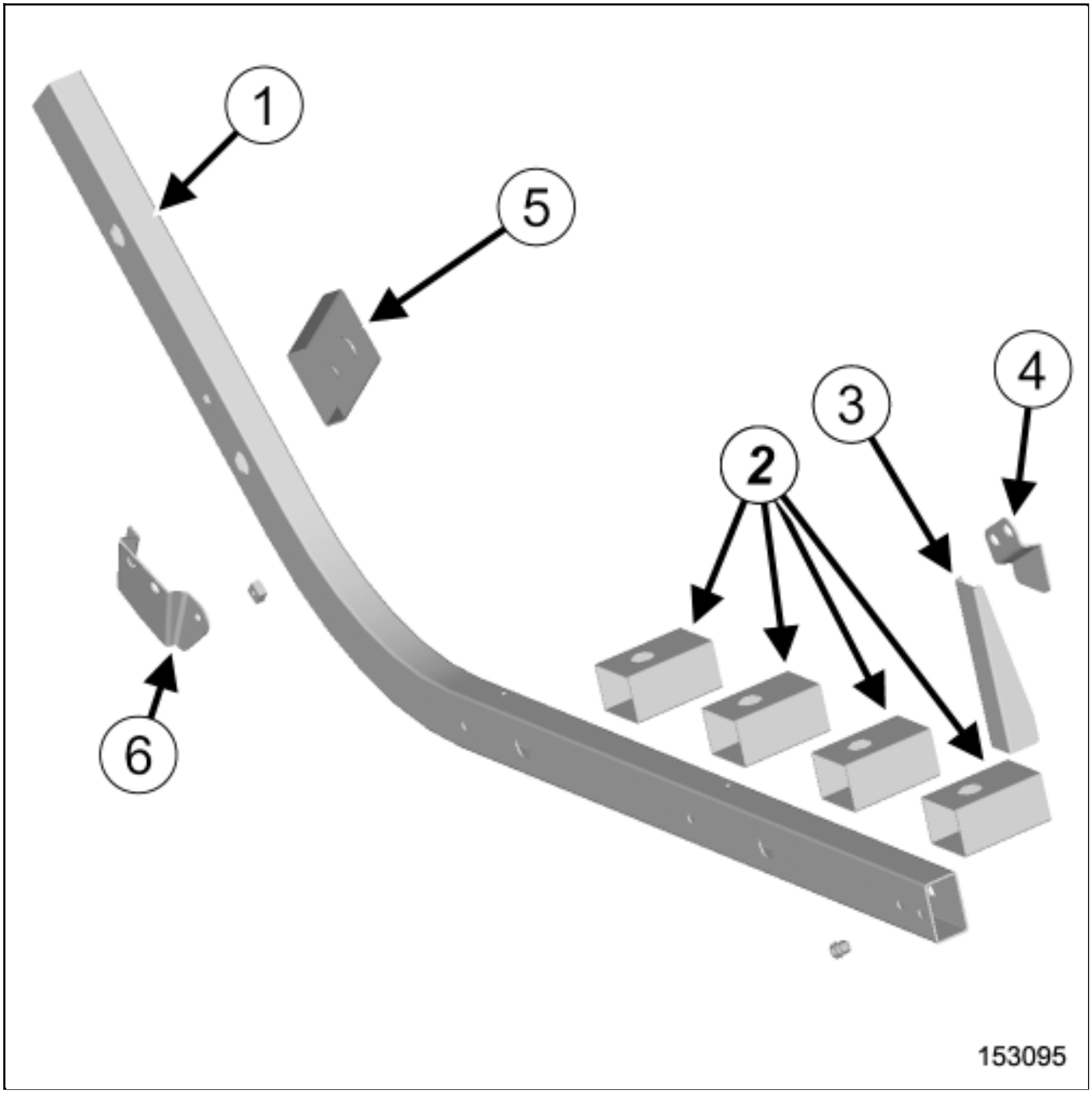

WITHOUT SIDE DOORS

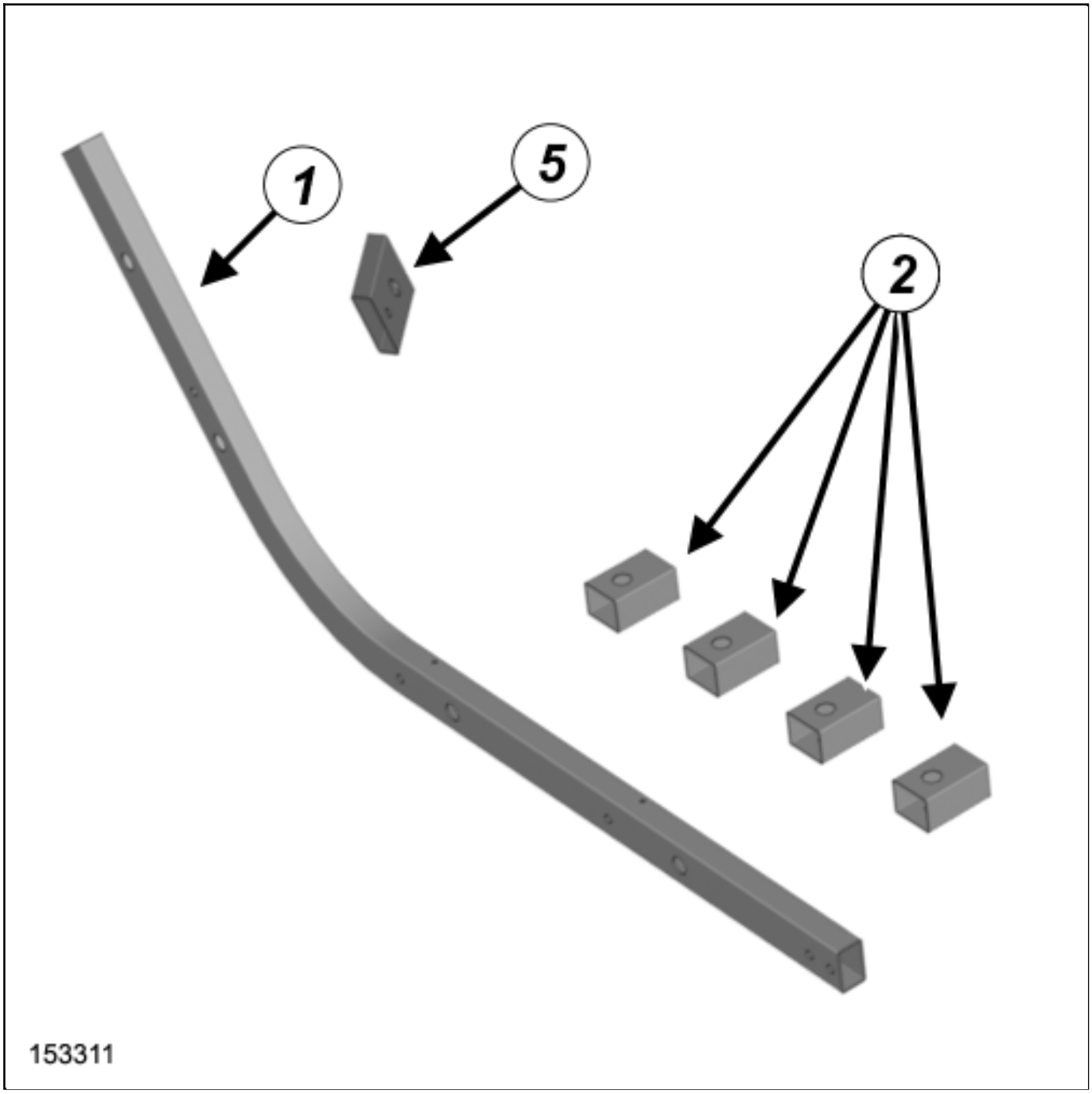
1
5
2
153311

No.	Description	Type	Thickness (mm)
(1)	Sill	TSE	2
(2)	Sill stiffener	TSE	1.2
(3)	Door rear centering support reinforcement	XES	2
(4)	Door rear centering reinforcement	XES	2
(5)	A-pillar reinforcement	TSE	1.5
(6)	Door front centering reinforcement	XES	2

Note:

The stud will be ordered in addition, it is not included in the replacement part.

2. IN THE EVENT OF REPLACEMENT

The option for replacing the part is as follows:

complete replacement.

CAUTION

If the mating faces of the parts to be welded are not accessible, make EGW plug welds to replace the original resistance welds (see MR 400).

1- POSITION OF ELECTRIC EARTHS

CAUTION

To avoid damaging the vehicles electric and electronic components, the earths of any wiring harness near the weld area must be disconnected.

Position the earth of the welding machine as close as possible to the weld area (see MR 400).

Locate the earths located near to the weld areaEarths on body: List and location of components .

2- COMPLETE REPLACEMENT

Note:

The repair bench does not have to be used, on condition that the side members have not been affected by the impact.

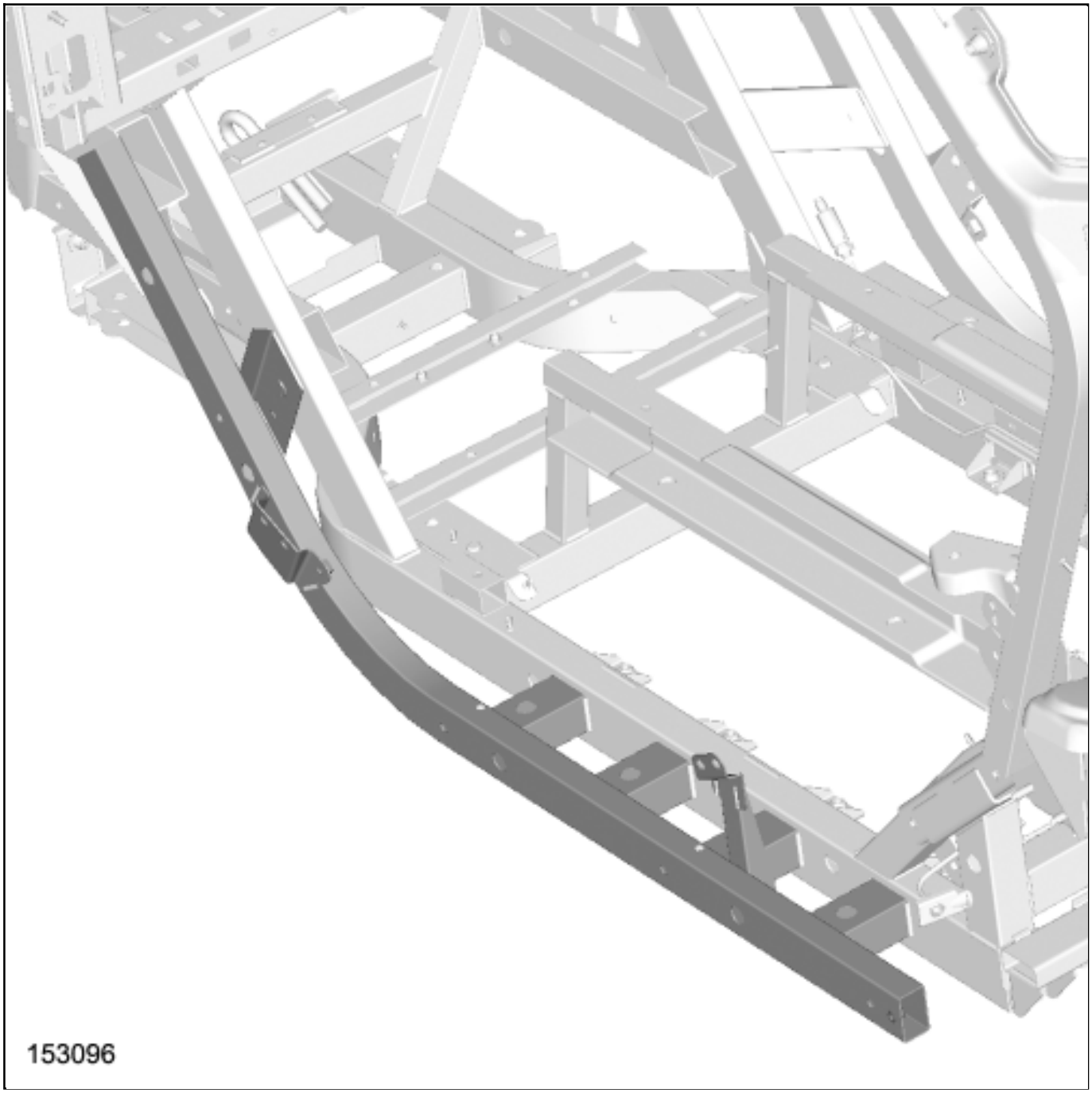

3- POSITION OF THE SPARE PART

AT THE REAR SECTION

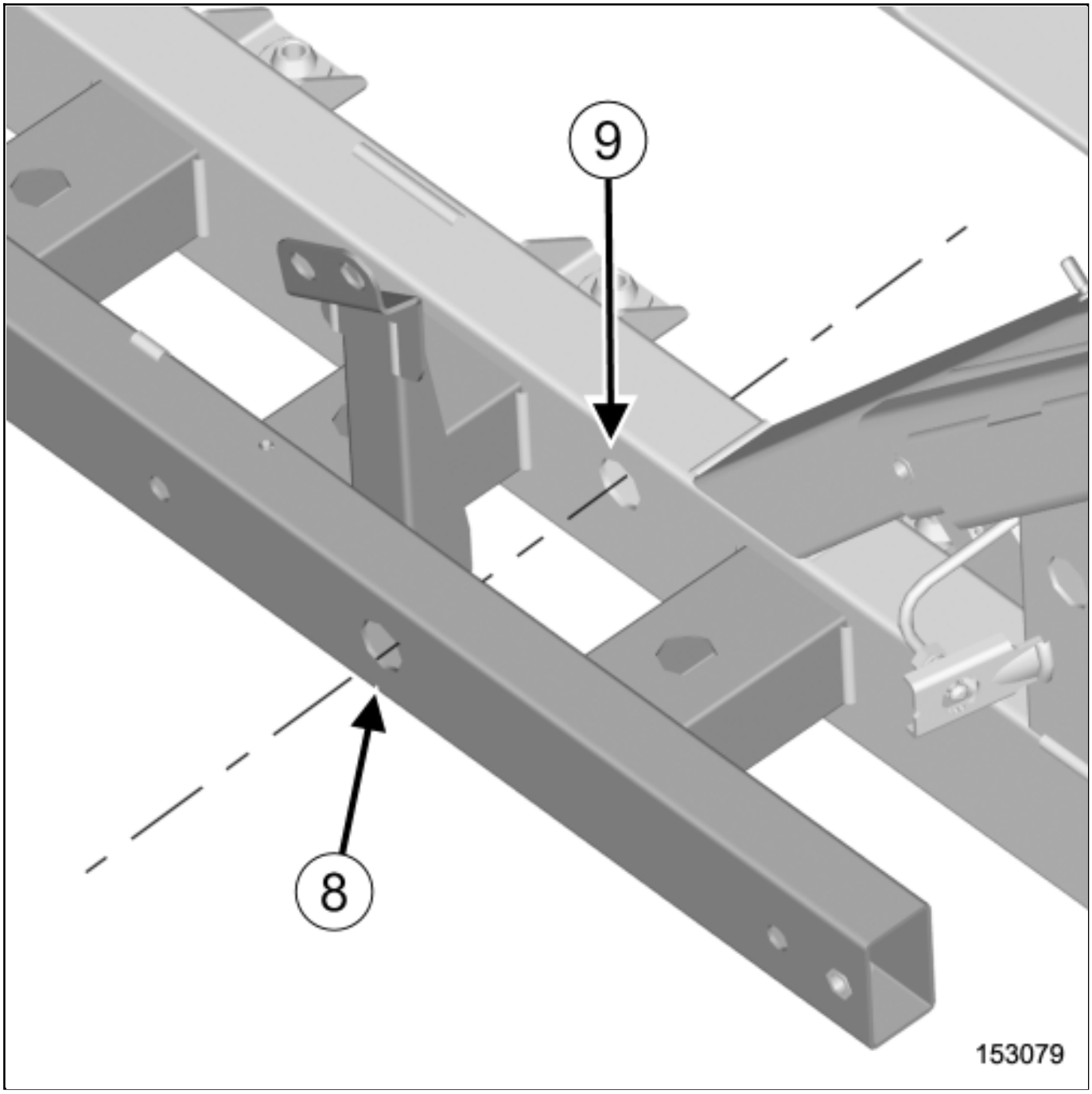

To position the part at the rear section, use the pilote holes 20,5 mmdiameter (8) and (9) .

AT THE FRONT SECTION

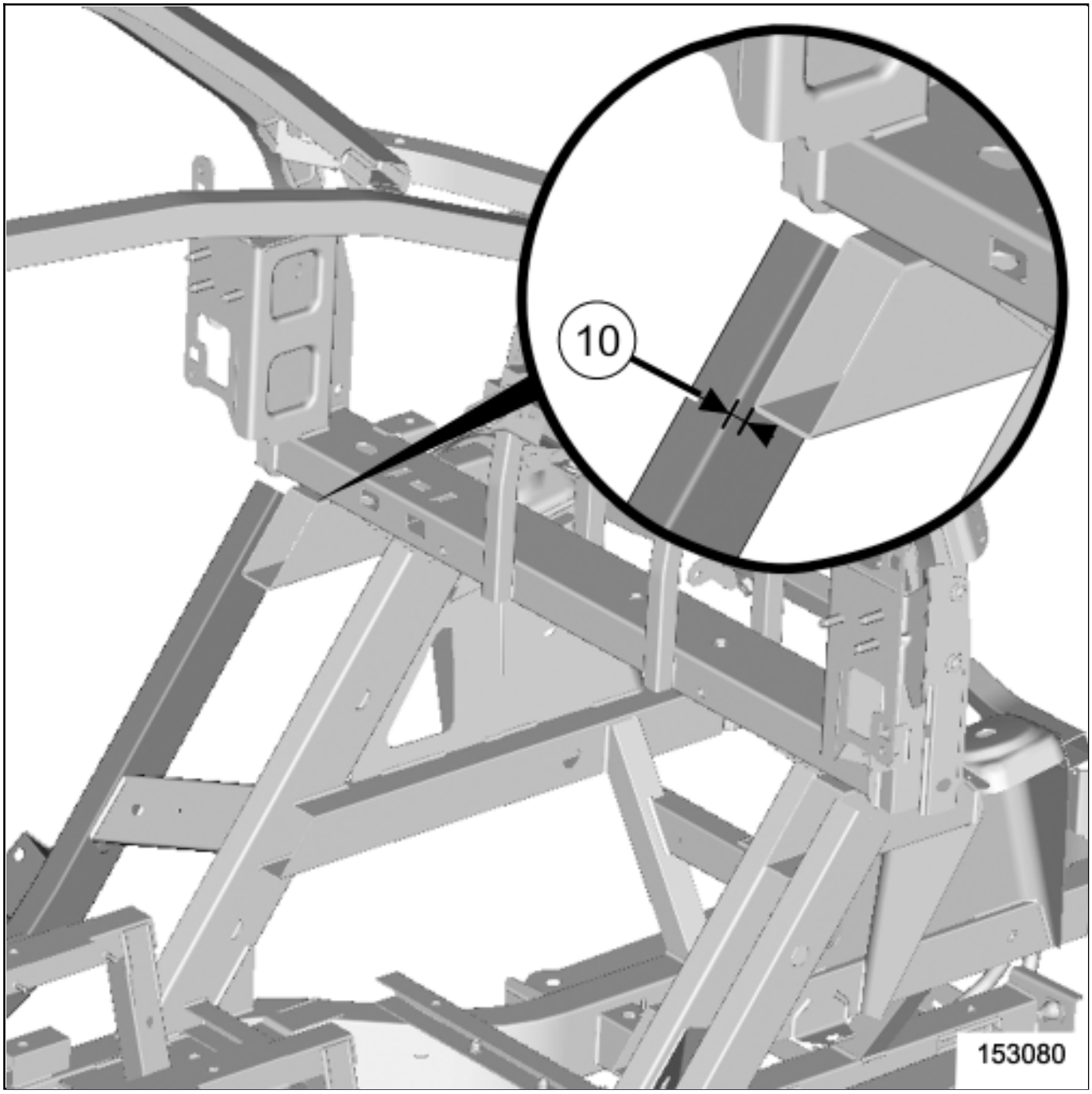

Position the part at the front section respecting the dimension(10) 10 mm .

4- LOCTATION OF THE STUD

LOCATION OF THE STUD

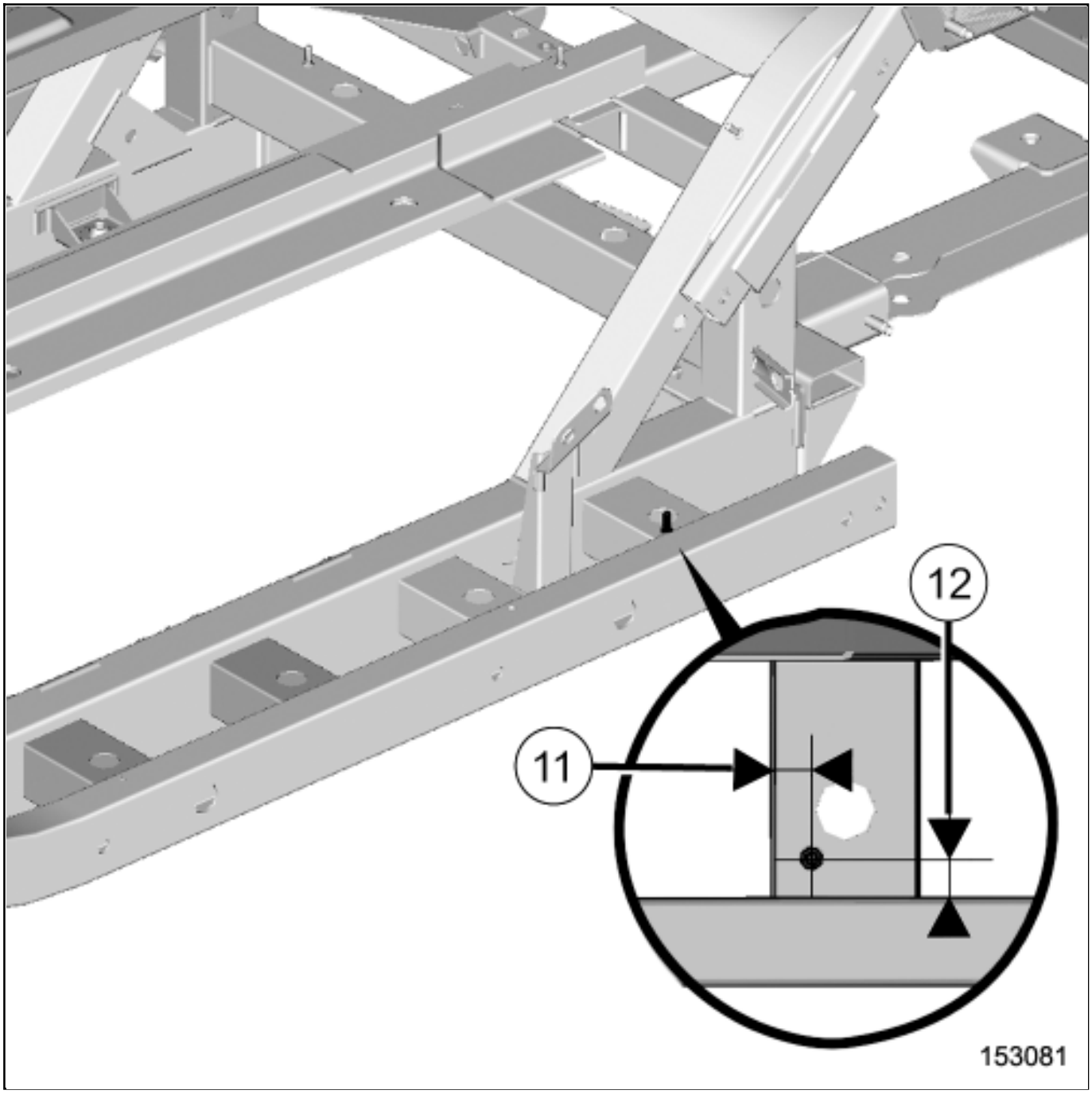

Mount the stud in accordance with the following dimensions:

- (11) at 13,21 mm,
- (12) at 12,98 mm.

SIDEOPENINGELEMENTS:ADJUSTMENT

1. HINGED SIDE DOOR

Check that the peripheral components are adjusted correctly.

Refit the heavy door fittings (closing system, window winder system).

Before carrying out the adjustments, release the striker panel and fit the hinges, pre-tightening in the middle of the adjustment.

Note:

For information about the adjustment zones, refer to the MR for the vehicle concerned.

1- ADJUSTMENT CHRONOLOGY

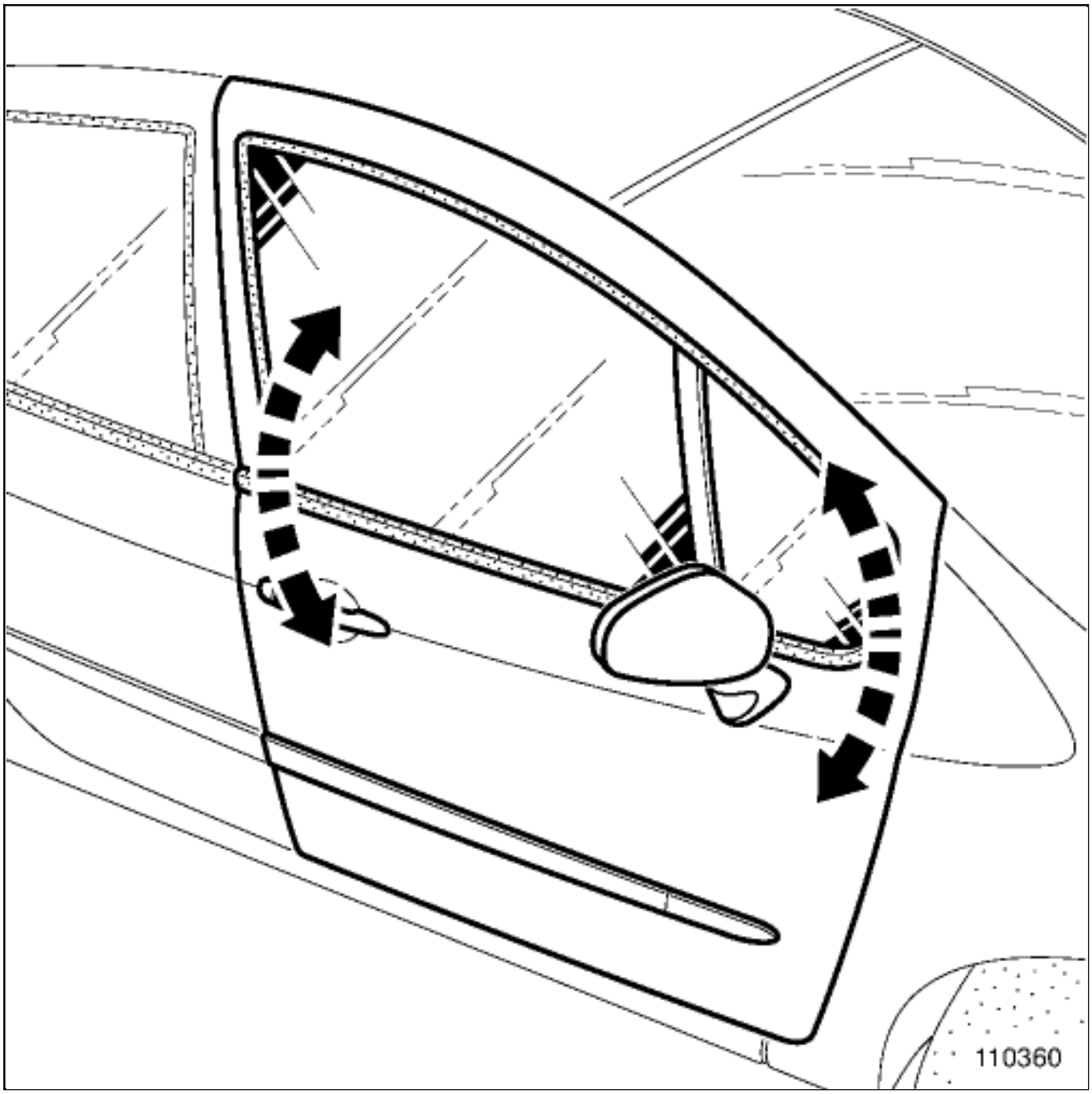

- Adjust the centring of the door.

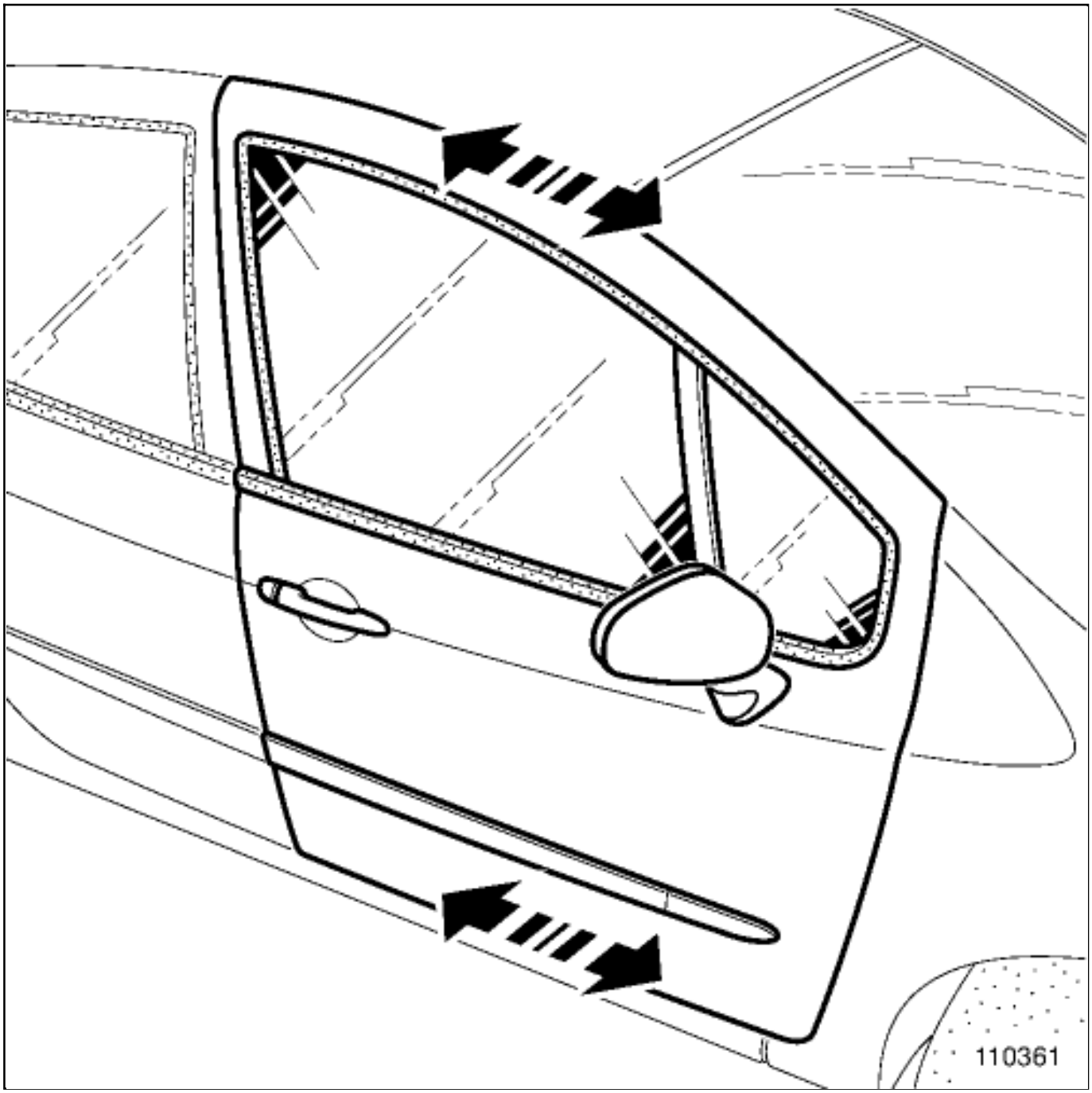

- Adjust the side alignment of the door.

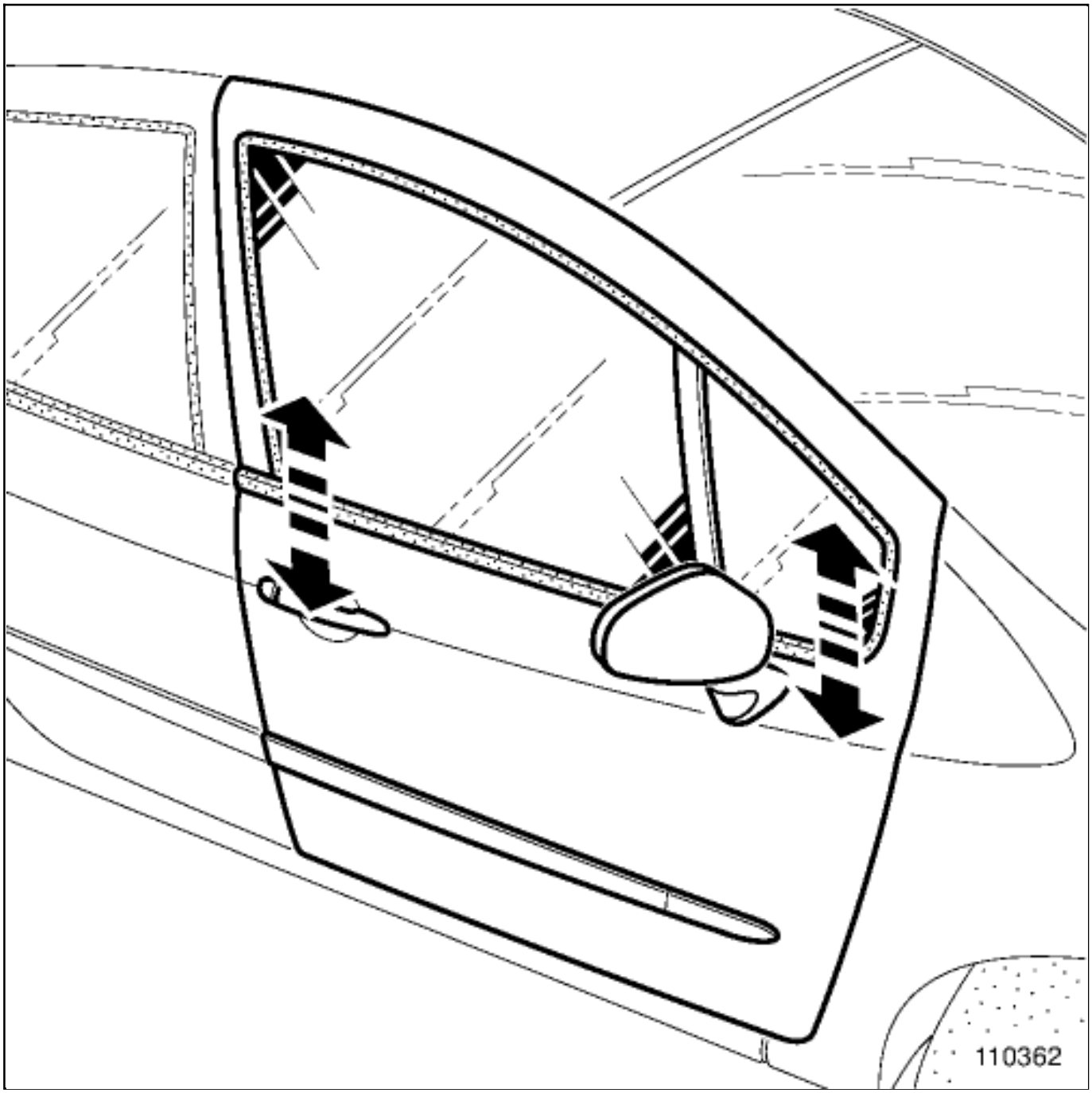

- Adjust the alignment of the door height.

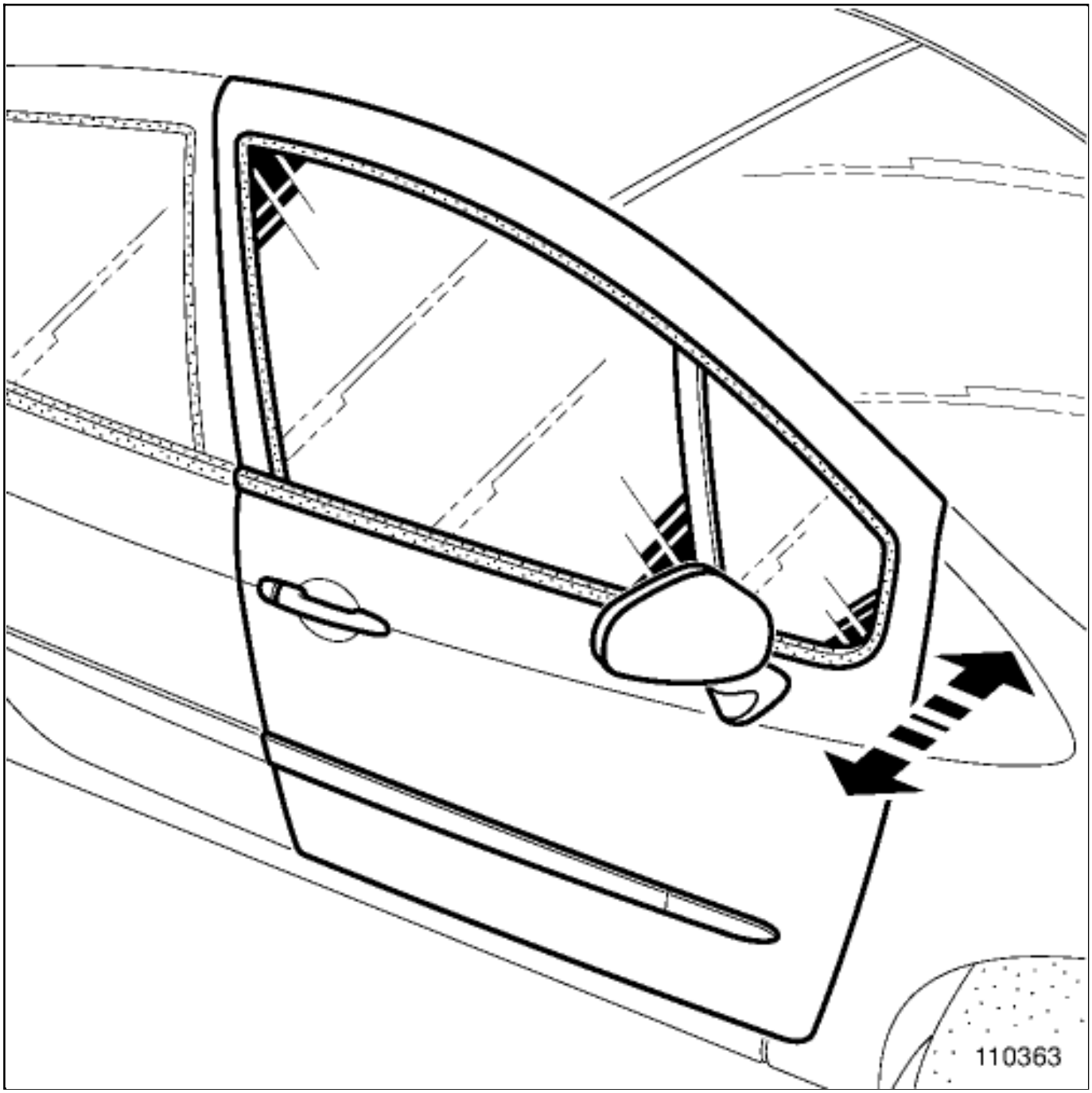

- Adjust the front flush fitting of the door.

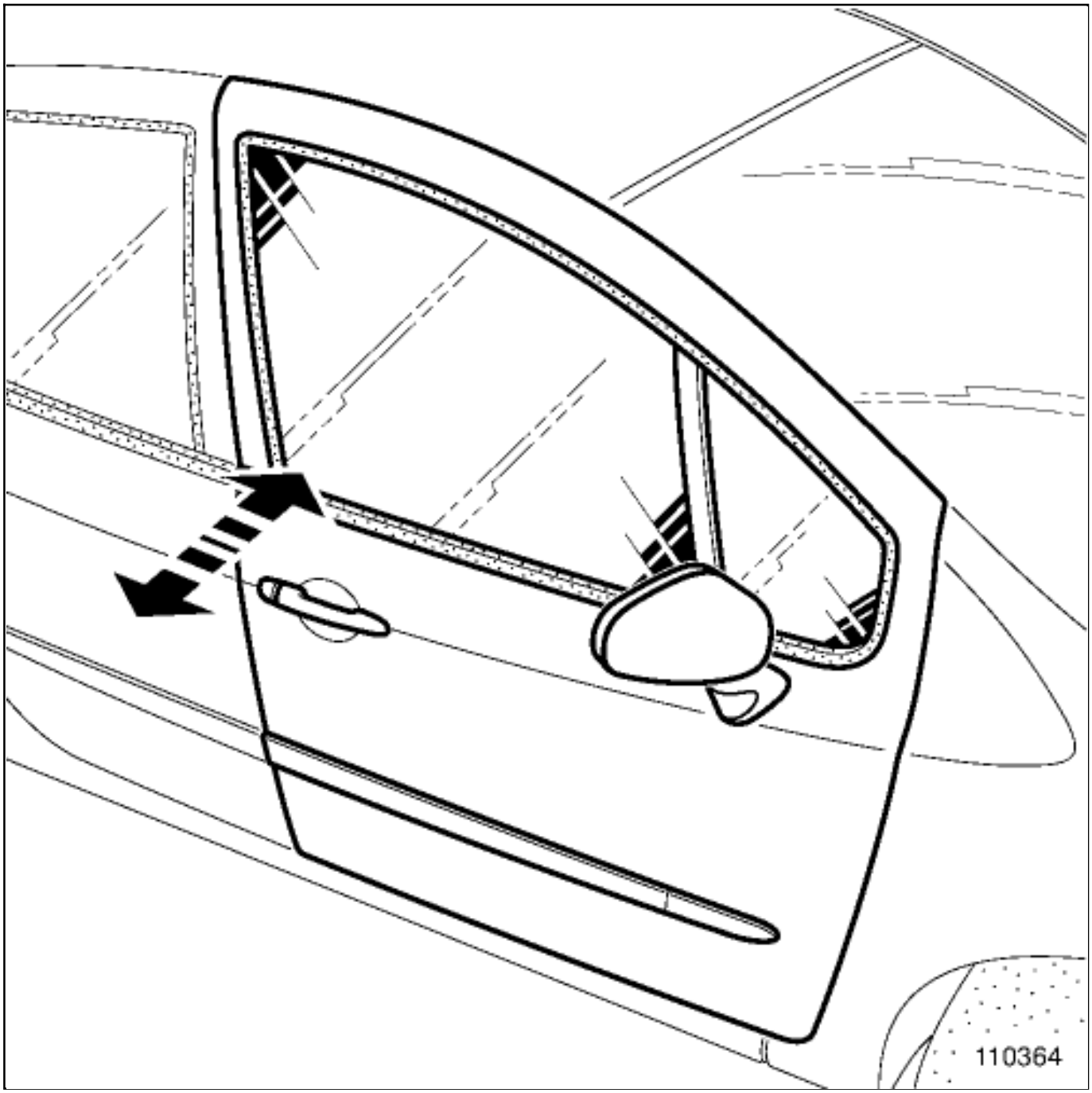

- Adjust the rear flush fitting of the door, as well as the contact and the closure firmness.

- Check the adjustment and the correct operation then tighten into position.

2. SLIDING SIDE DOOR

-

Check that the peripheral components are adjusted correctly.

Refit the heavy door fittings (closing system, window winder system).

Before carrying out the adjustments, release the striker panel and fit the hinges, pre-tightening in the middle of the adjustment.

Note:

For information about the adjustment zones, refer to the MR for the vehicle concerned.

1- ADJUSTMENT CHRONOLOGY

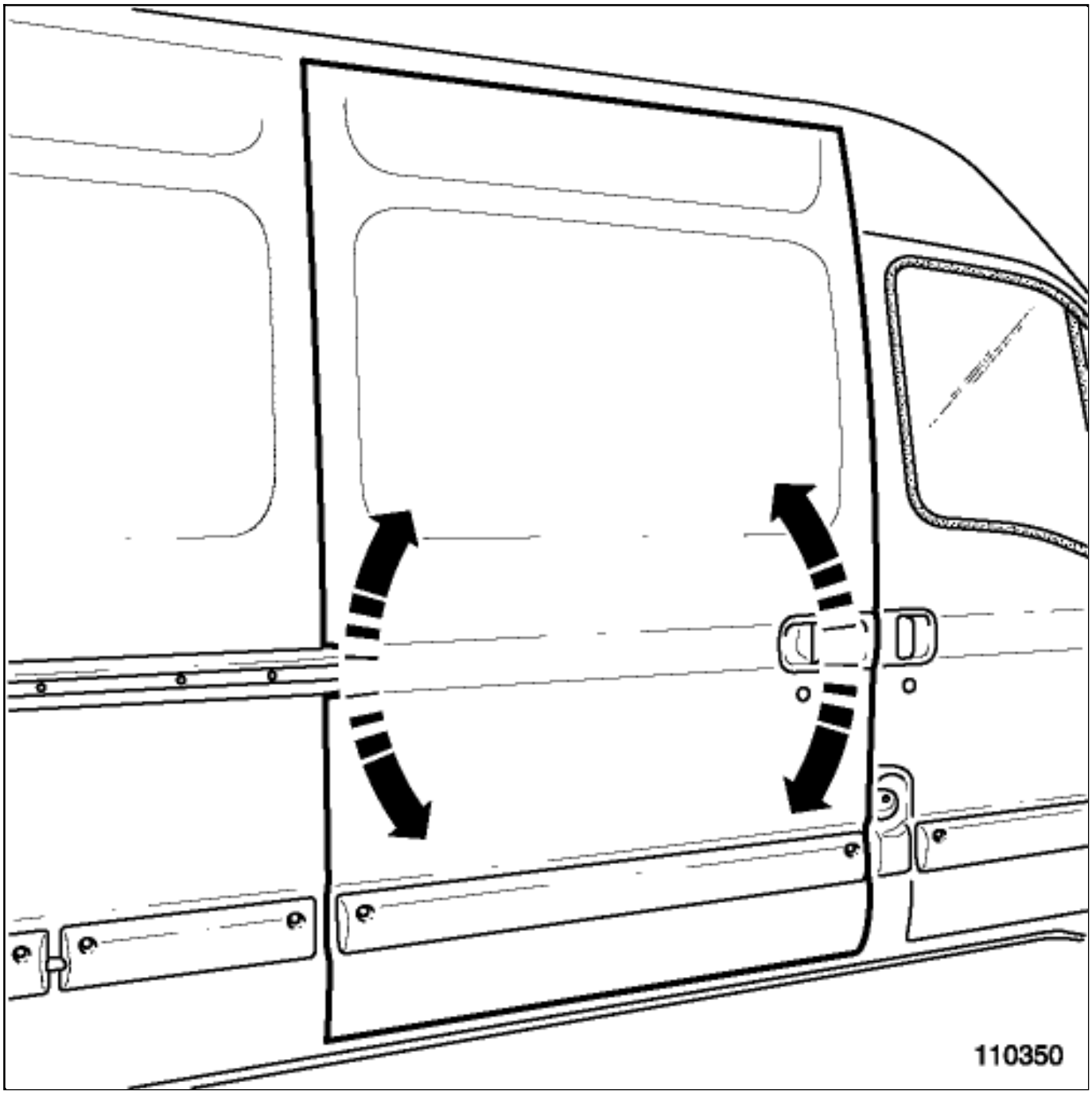

- Adjust the centring of the door.

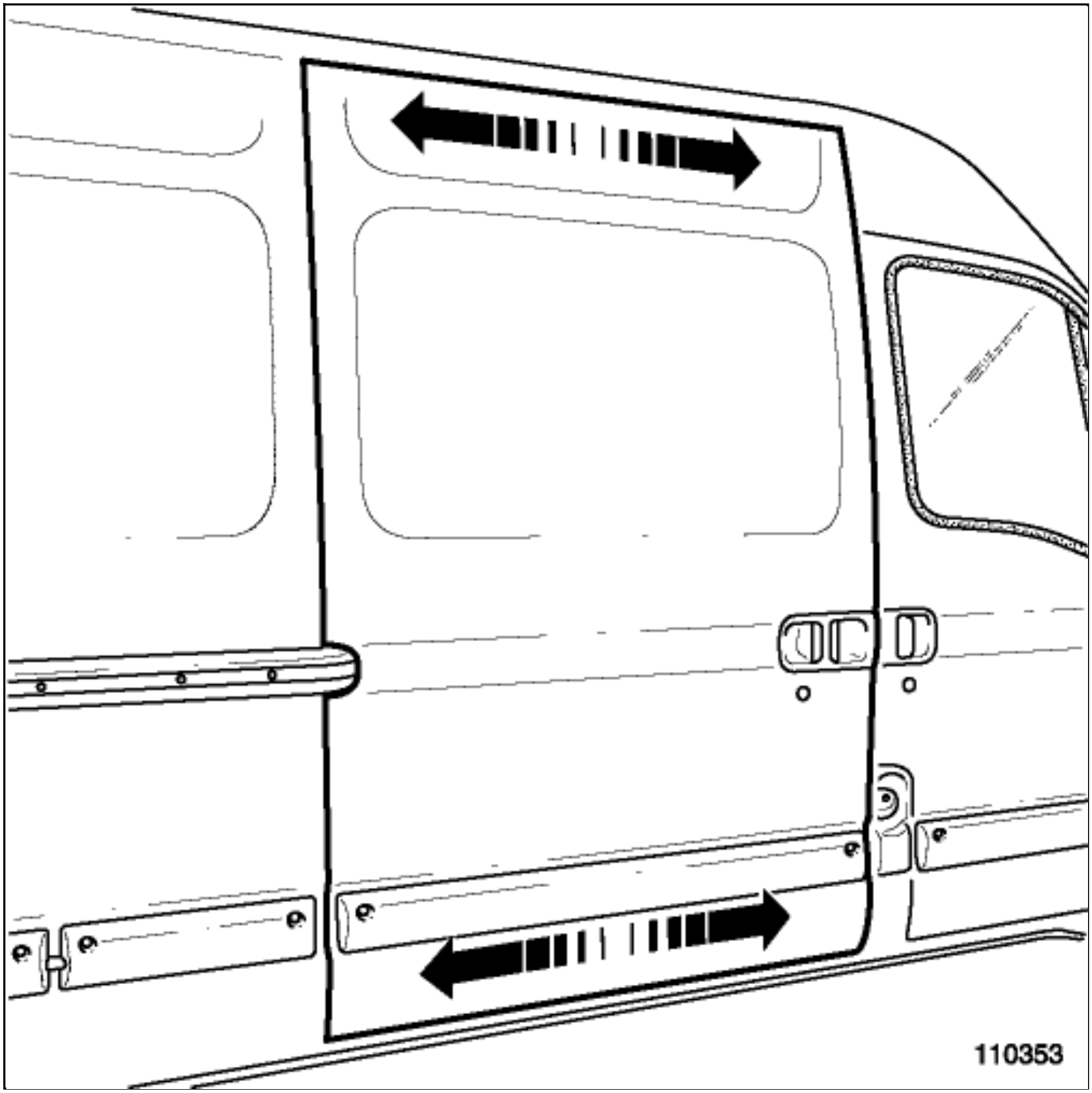

- Adjust the side alignment of the door.

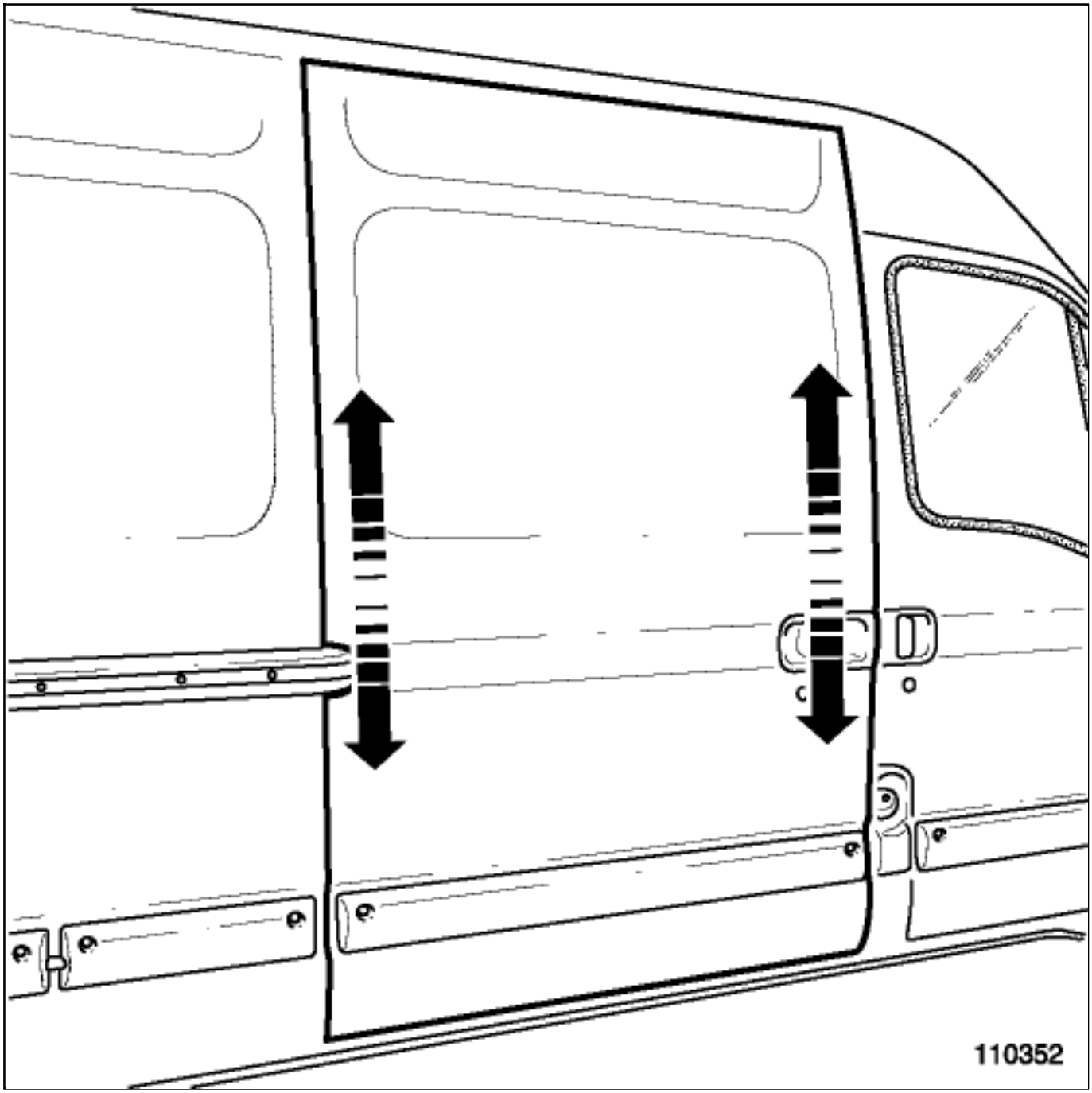

- Adjust the alignment of the door height.

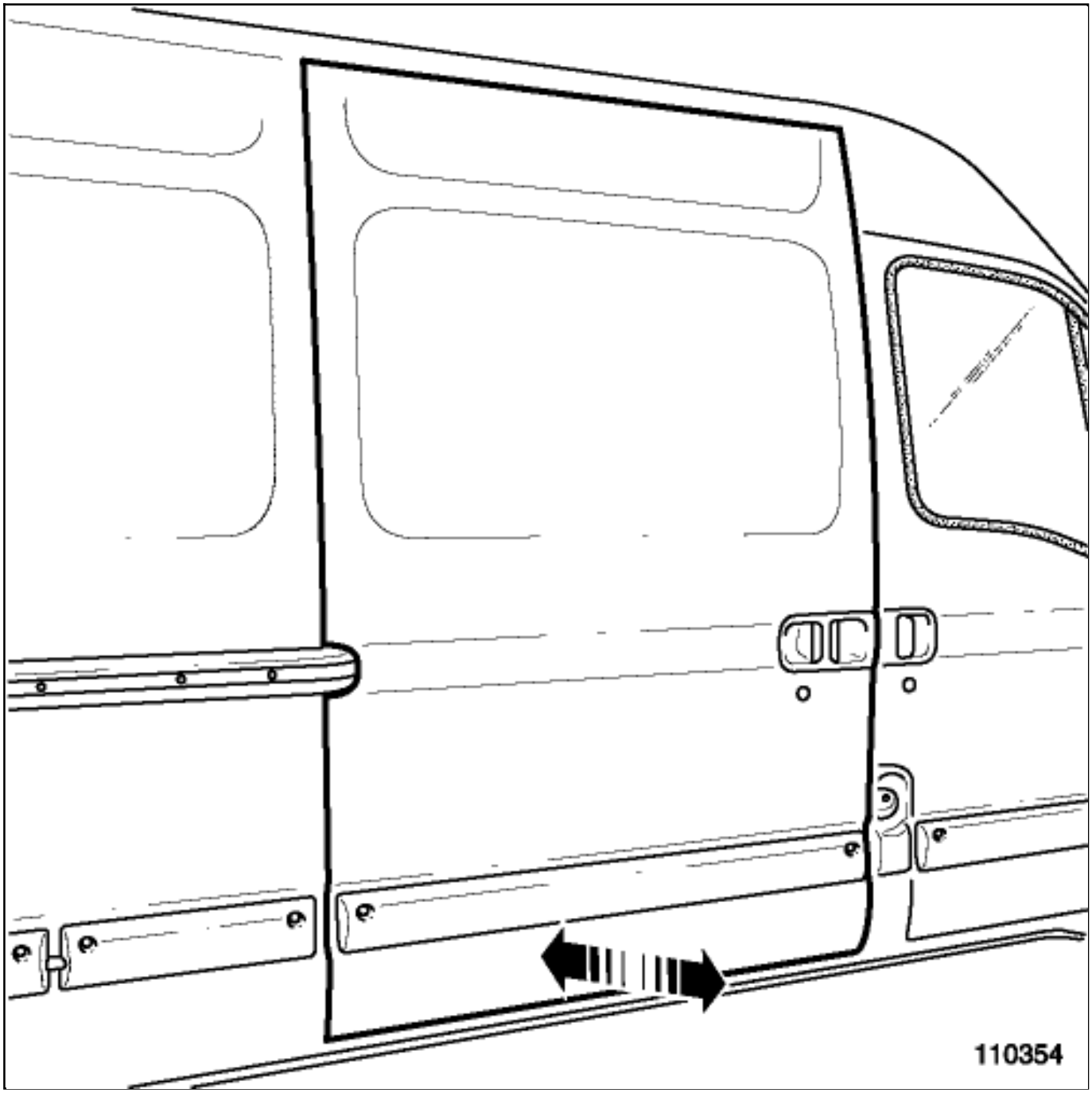

- Adjust the flush fitting of the bottom section of the door.

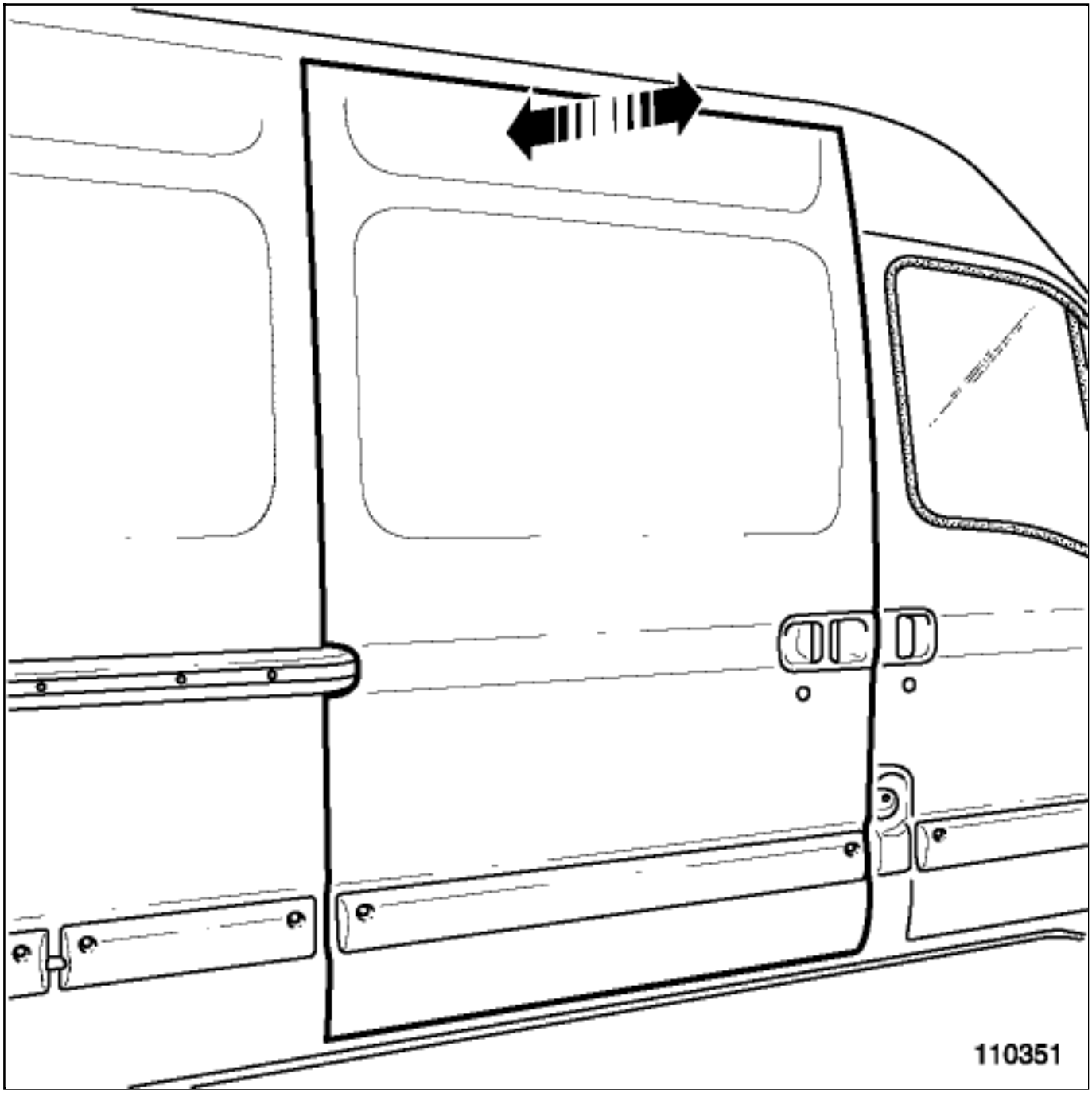

- Adjust the flush fitting of the top section of the door.

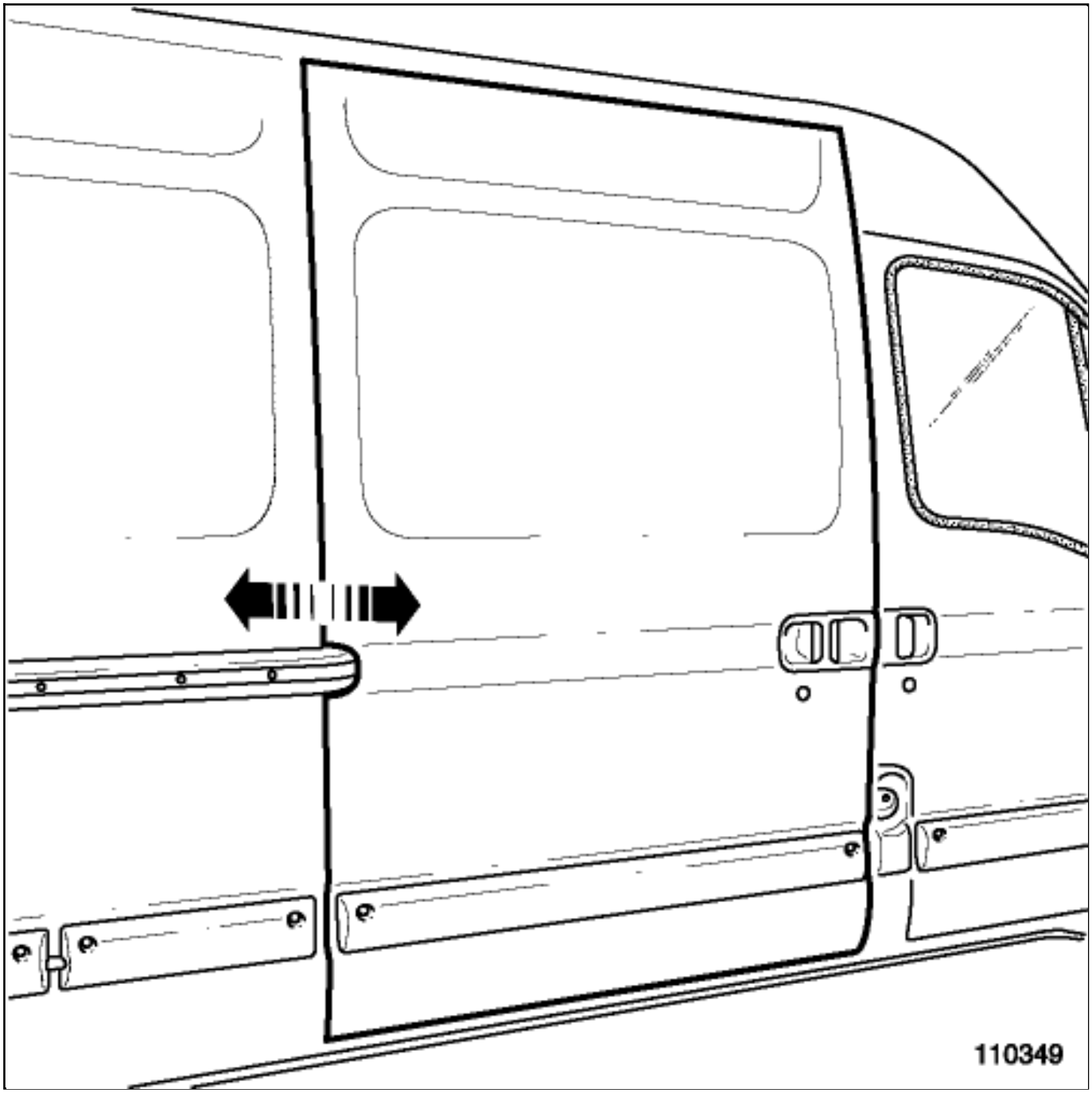

- Adjust the rear flush fitting of the door.

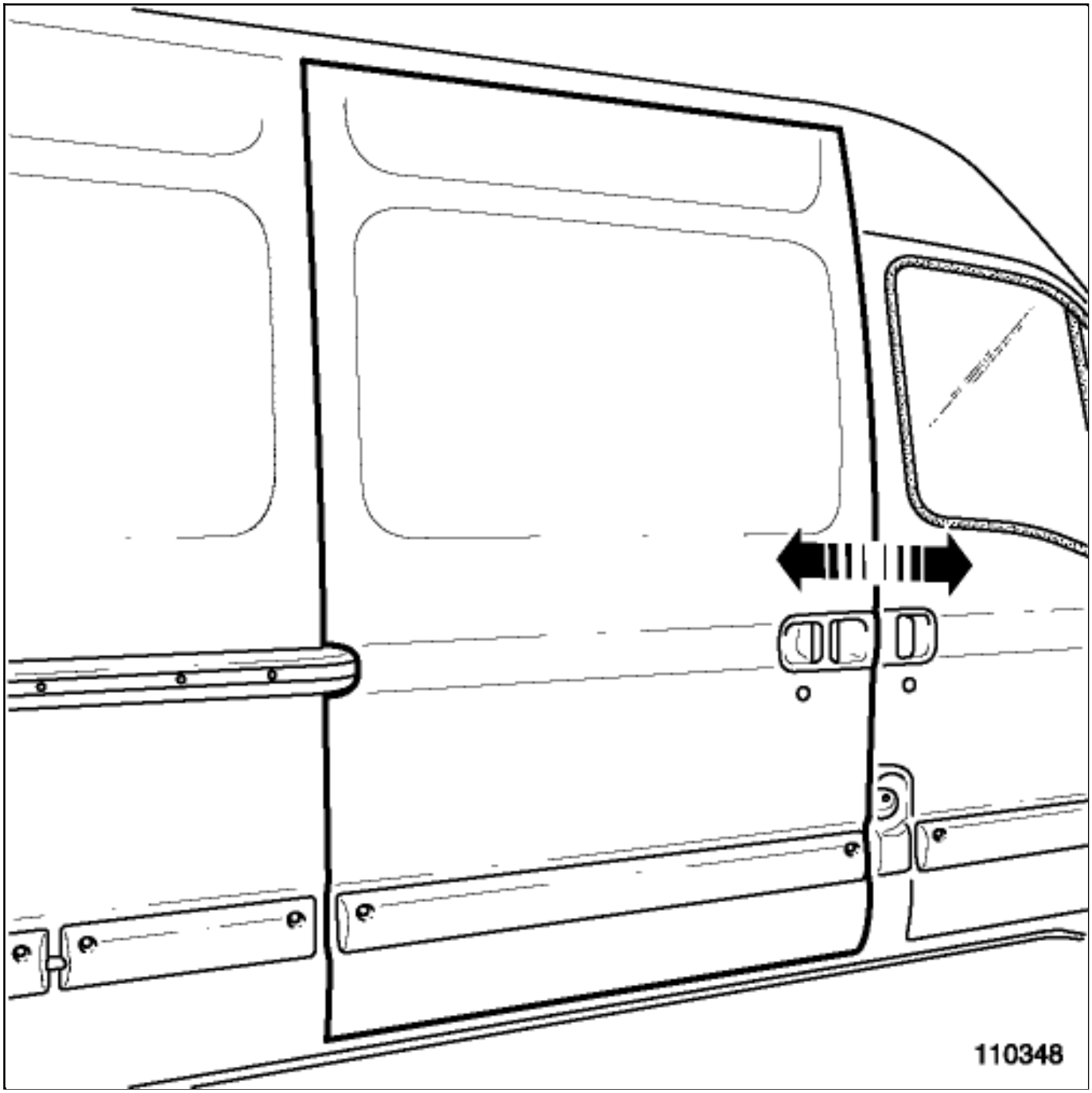

- Adjust the front flush fitting of the door.

- Check the adjustment and the correct operation then tighten into position.

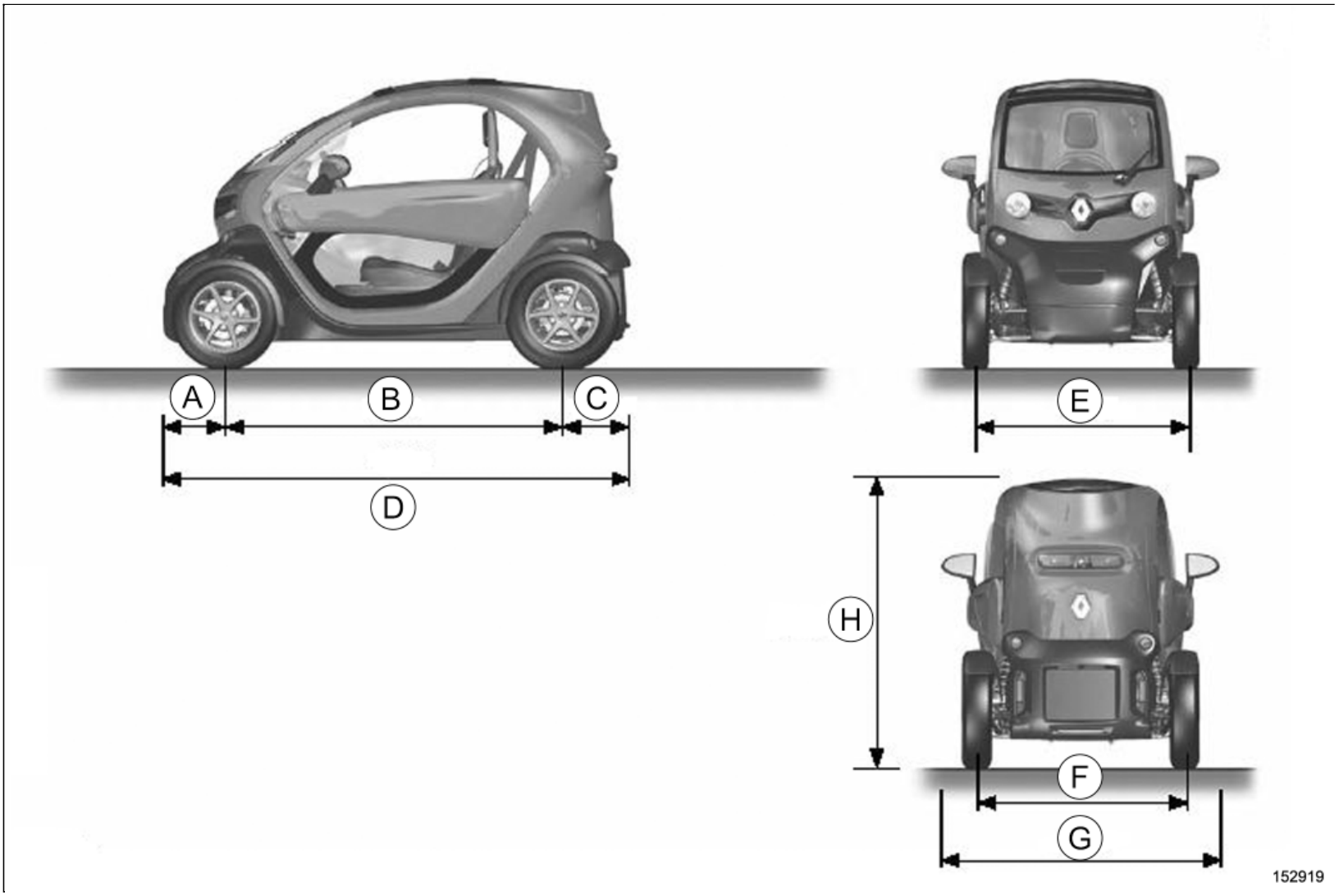

Mark	Dimension (in meters)
(A)	0,907
(B)	2,701
(C)	1,140
(D)	4,748
(E)	1,545
(F)	1,563
(G)	2,037
(H)	1,462

	Motor			Reductor	
	Motor type	**Motor suffix**	**Motor technology**	**Reductor type**	**Reductor suffix**
Twizy 45	3CG	40	Asynchronous	RB0	001
Twizy 75					002

TRACTION BATTERY

Designation	Type	Suffix
Twizy 45	BT3 MN1	1000

Repair-00x01x01-02x08-1-53-1.xml

XSL version : 3.02 du 22/07/11

STEERING ASSEMBLY: EXPLODED VIEW

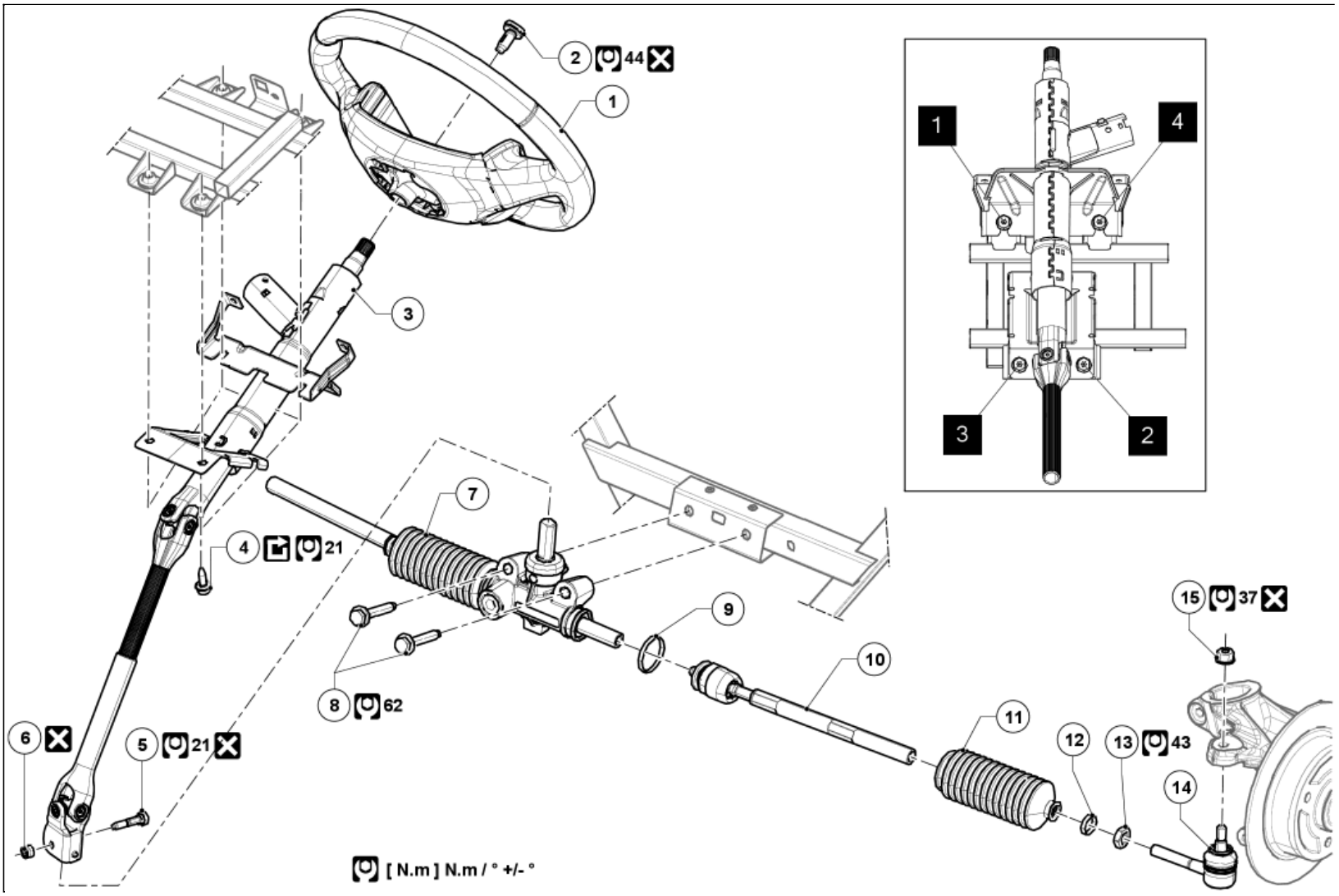

Illustration key: Description .

Marks	Designations	Informations
1	Steering wheel	(see 36A, Steering assembly , Steering wheel: Removal - Refitting)
2	Steering wheel bolt	
3	Steering column	
4	Steering column bolts	
5	Universal joint bolt	
6	Universal joint nut	
7	Steering box	(see 36A, Steering assembly , Steering box: Removal - Refitting)
8	Steering box bolts	
9	Steering box gaiter large clip	
10	Track rod	
11	Steering box gaiter	
12	Steering box gaiter small clip	
13	Track rod nut	
14	Track rod end	
15	Track rod end nut	

STEERING BOX: REMOVAL - REFITTING

Note, one or more warnings are present in this procedure

WARNING

To avoid all risk of damage to the systems, apply the safety and cleanliness instructions and operation recommendations before carrying out any repair:

- (see 36A, Steering assembly , Steering: Precautions for the repair) ,
- Vehicle: Precautions for the repair .

Location and specifications (tightening torques, parts always to be replaced, etc.)(see 36A, Steering assembly , Steering assembly: Exploded view) .

REMOVAL

1. REMOVAL PREPARATION OPERATION

Position the vehicle on a two post lifVehicle: Towing and lifting .

WARNING

DANGER: HIGH VOLTAGE VEHICLE.

Risks of serious burns or electric shock that may prove fatal.

Before carrying out any work on the vehicle, it is essential that you adhere to the instructions regarding vehicle voltage cut-off. This work must be carried out by an employee who is qualified and authorized to work on a high-voltage onboard network Vehicle: Precautions for the repair .

Remove the lockout of the vehicleVehicle: Lockout - Removal of lockout .

- Remove the front wheels Wheel: Removal - Refitting .
- Remove the front bumper upper strip Exterior body front trim assembly: Exploded view .
- Remove the A-pillar trims Exterior body side trim assembly: Exploded view .
- Remove Exterior body front trim assembly: Exploded view :
  - the front bumper lower trim,
  - the front bumper trim,
  - the front impact absorber.
- Remove the windscreen washer bottle screws Wipers/washing assembly : Exploded view .
- Move aside the windscreen washer bottle.
- Remove the track rod end nuts (see 36A, Steering assembly , Steering assembly: Exploded view) .
- Extract the track rod end Ball-joint uncoupling tool : Use .

2. REMOVAL OPERATION

- Remove (see 36A, Steering assembly , Steering assembly: Exploded view) :
  - the track rod nuts,
  - the universal joint nut and bolt,

- the steering box bolts,
- the steering box.

REFITTING

1. REFITTING OPERATION

- Proceed in the reverse order to removal.

2. FINAL OPERATION

- Lockout the vehicle **Vehicle: Lockout - Removal of lockout** .
- Control and adjust the front axle assembly **Front axle system: Adjustment** .

Repair-13x04x03-01x37-1-30-1.xml

XSL version : 3.02 du 22/07/11

STEERING WHEEL: REMOVAL - REFITTING

Note, one or more warnings are present in this procedure

parts always to be replaced:
Steering wheel bolt

WARNING

Before carrying out any operation on a vehicle fitted with the Stop & Start system, always follow the safety instructions**Vehicle: Precautions for the repair**

WARNING

To avoid all risk of damage to the systems, apply the safety and cleanliness instructions and operation recommendations before carrying out any repair:

- (see 36A, Steering assembly , Steering: Precautions for the repair) ,
- Control - Signals: Precautions for repair ,
- Vehicle: Precautions for the repair .

Location and specification (tightening torques, parts always to be replaced, etc.)Steering assembly: Exploded view .

REMOVAL

1. REMOVAL PREPARATION OPERATION

❑

Apply the procedure for deactivating the safety systems Airbag and pretensioners: Precautions for the repair .

WARNING

DANGER : Risk of serious injuries due to the short-circuiting or the untimely triggering of an electrical system (pyrotechnical parts, windscreen wiper motor, electric fan, etc.) following possible loopback of the 12-volt supply circuit by the voltage transformer.

Please adhere to the instructions regarding cut-off of the 12-volt supply circuit.

If the procedure fails, do not continue with your task and ask an employee who is qualified and authorized to work on a high-voltage onboard network to perform a diagnostic Vehicle: Precautions for the repair .

❑

Lockout the 12V supply circuit 12 V supply circuit : Lockout - Removal of lockout .

❑

Remove the driver's frontal airbag Driver's frontal airbag: Removal - Refitting .

❑

Set the wheels straight ahead.

❑

Disconnect the connectors.

2. REMOVAL OPERATION

❑

Remove the steering wheel bolt.

❑

Remove the steering wheel.

REFITTING

1. REFITTING PREPARATION OPERATION

- parts always to be replaced: Steering wheel bolt .

- Check the alignment of the rotary switch Rotary switch: Adjustment .

2. REFITTING OPERATION

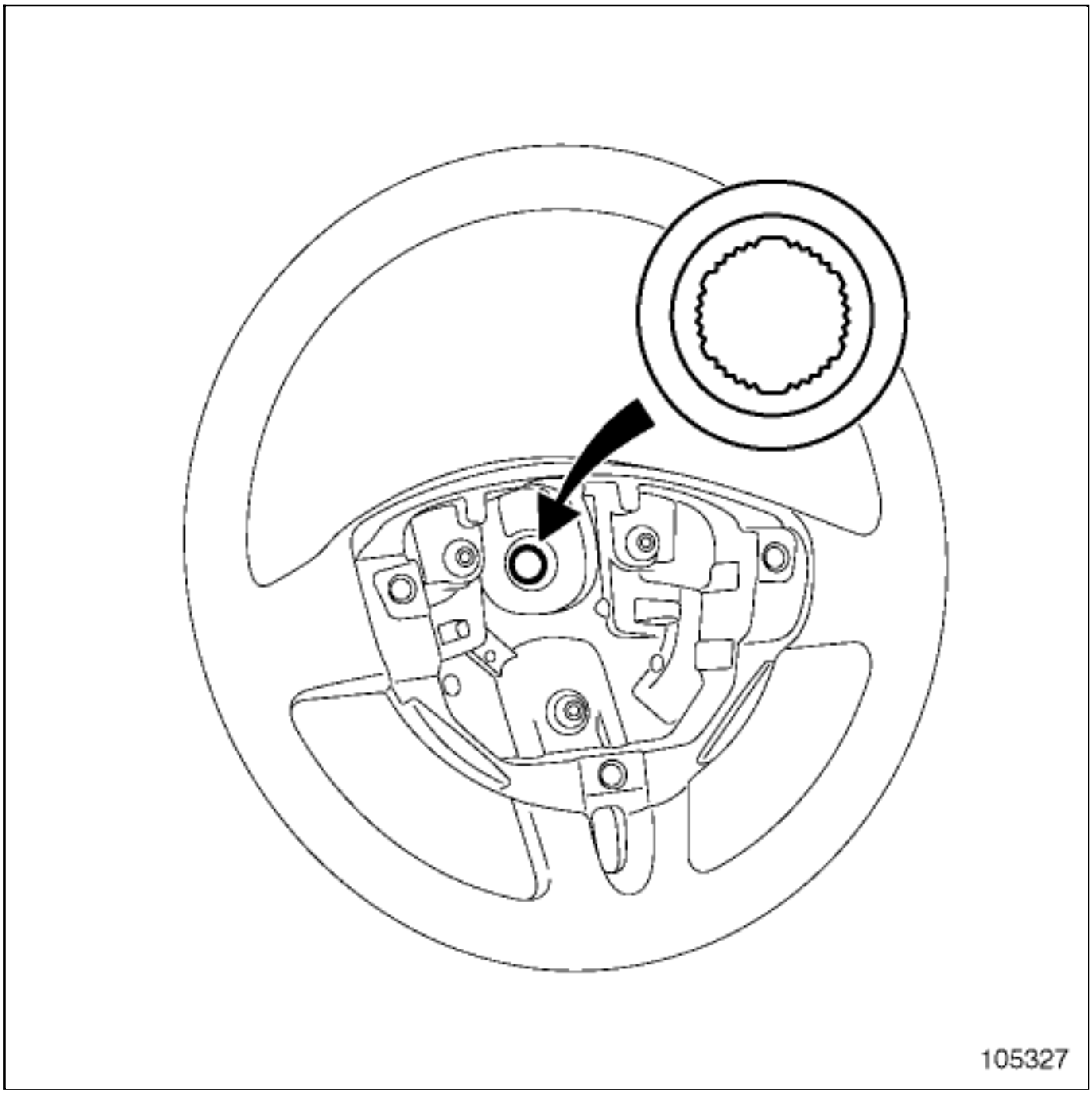

CAUTION

In order not to damage the steering wheel or steering column, the steering wheel-column foolproofing devices must be aligned.

- Refit the steering wheel.

-

Connect the connectors.

- Refit a new steering wheel bolt.

- Torque tighten the steering wheel bolt Steering assembly: Exploded view .

3. FINAL OPERATION

- Refit the driver's front airbag Driver's frontal airbag: Removal - Refitting .

- Remove the lockout of the 12V supply circuit 12 V supply circuit : Lockout - Removal of lockout .

- Apply the procedure for activating the safety systems Airbag and pretensioners: Precautions for the repair .

4. CHECKING AFTER REPAIR

- Switch on the ignition.

- Check the operation of the rotary switch:
  - turn the steering wheel to the left until it stops,
  - turn the steering wheel to the right until it stops,
  - check that there are no faults on the instrument panel.

XSL version : 3.02 du 22/07/11

STRUCTURALBODYWORKDOCUMENTATION:DESCRIPTION

1. CLASSIFYING INFORMATION

This information is classified in two complementary documents:

1- VEHICLE STRUCTURE BODYWORK REPAIR PROCEDURES (MR OF THE VEHICLE CONCERNED)

This document comprises two sections:

1)SECTION 0:

- This section does not contain repair methods, it only contains description information; it consists of several subsections:
  - 01C Vehicle bodywork specifications,
  - 02A Lifting equipment,
  - 02B Bodywork innovations,
  - 03B Collision,
  - 04B Consumables - Products,
  - 04E Painting,
  - 05B Bodywork equipment and tooling.

2)SECTION 4:

- This section consists of several subsections:
  - 40A General information,
  - 41A Lower front structure,
  - 41B Lower central structure,
  - 41C Lower side structure,
  - 41D Lower rear structure,
  - 42A Upper front structure,
  - 43A Upper side structure,
  - 44A Upper rear structure,
  - 45A Top of body,
  - 47A Side opening elements,
  - 48A Non-side opening elements.

- These subsections are linked to the Replacement Parts Catalogue and contain two types of information:
  - Section 1: General description. This section contains information relating to generic structural spare parts and to their design. This information may be the same for several vehicles.
  - Section 2: Description, Removal - Refitting, Stripping - Rebuilding and Adjustment. This section contains information relating to structural spare parts and the special features of the vehicle concerned.

Note:

Always read both parts in order to have all the necessary information to repair the vehicle.

2- FUNDAMENTALS OF THE STRUCTURE BODYWORK REPAIR (MR 400)

This document comprises two sections:

1)SECTION 0:

- this section consists of several subsections:
  - 04F Bodywork products and mountings
  - 05B Bodywork equipment and tooling

2)SECTION 4:

This section contains information on the basic operating ranges which concern the bodyshop technician.

- this section consists of several subsections:
  - 40A General information
  - 40B Electrical resistance welded connections
  - 40C Gas metal arc welded connections (GMAW)
  - 40D Laser welded connections
  - 40E Partial replacement connections
  - 04F Bonded connections
  - 40G Riveted connections
  - 40H Screw connections
  - 40J Protective devices

2. INFORMATION SEARCH

Questions	Answers
Features of specific tools to repair a given vehicle.	Refer firstly to section 0 of the Vehicle MR then refer to the "special tooling catalogue" or the "garage equipment catalogue" .
Features of specific products to repair a given vehicle.	Firstly refer to section 0 of the Vehicle MR then refer to the "IXELL product catalogue" .
Description and part number of a specific tool to repair a given vehicle.	Firstly refer to section 0 of the Vehicle MR.
Using a bodywork tool.	Refer to subsection 40A of the Vehicle MR.
Information concerning the replacement parts of a given vehicle regarding: ■ the possibilities of replacement with the position on vehicle, ■ an adaptation before the assembly, ■ a cutting place with the special notes on this cut, ■ special notes on right-left symmetry. ■ special features of the version or equipment.	Refer to the subsection which corresponds to the part concerned: 41 to 48 of the Vehicle MR.

Information concerning the spare parts of a given vehicle, the composition and the specifications of each part it contains.	Firstly refer to the parts description exploded view in subsection 40 of the Vehicle MR.
	If this is detailed in the document, refer to subsections 41 to 48 of the Vehicle MR which corresponds to the part concerned.
	If this does not appear in the description, refer to subsection 41 to 48 for the part in the next level up.
❑ Information concerning: ■ details of panel overlap on a joint, ■ a procedure and an operational mode relating to a new type of assembly in Renault, ■ a method for using a tool or a new product which is unfamiliar in Renault.	Refer to the subsection which corresponds to the part concerned: 41 to 48 of the Vehicle MR then subsection 40 of Vehicle MR 400.
Towing and raising a vehicle after an accident.	Firstly refer to subsection 02A of the Vehicle MR then the equipment catalogue.
Combination of impacts to repair a given vehicle.	Refer to subsection 03B of the Vehicle MR.
Fault finding on an impact for a given vehicle.	Firstly refer to subsection 03B of the Vehicle MR or MR 400.
Logic of impact fault finding.	See MR 400.
❑ General instructions for: ■ repair, ■ safety, ■ preparing a vehicle, ■ tool classification, ■ precautions for repair.	Refer to section 0 of the Vehicle MR or MR 400.

3. SYMBOLS FOR STRUCTURE REPAIR PROCEDURES

You will find below the detailed explanations of all the symbols used in the structure bodywork methods.

- At the top of each DU you will find a reminder of these different components:
  - the tightening torques,
  - the specific tools.

1- SPECIFICATIONS OF SPARE PARTS

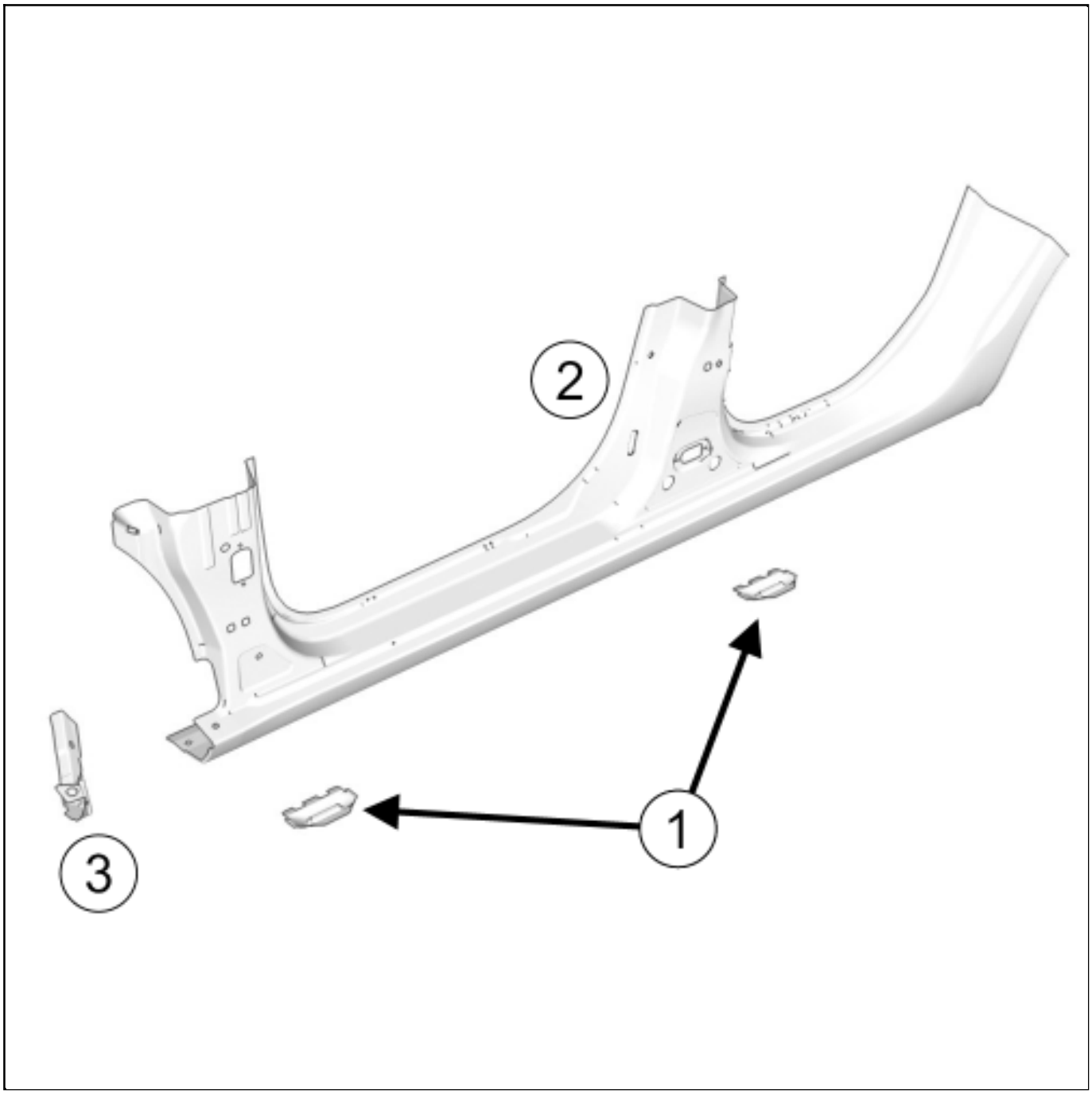

When a spare part consists of several parts, a table indicates the components of the spare part with notes on the illustration.

No.	Description	Type	Thickness (mm)
(1)			
(2)			
(3)			

2- IN THE EVENT OF REPLACEMENT

Only on illustrations of replacement parts, the bold lines indicate the possible cuts that can be made in the case of a partial replacement.

A list indicates the name and the marks that delimit the replacement.

- The options for replacing this part are as follows:
  - complete replacement A-D-F,
  - front end partial replacement A-C,
  - front section partial replacement A-D-E,
  - partial replacement under door B-C,
  - rear section partial replacement C-D-F,
  - rear end section partial replacement E-F.

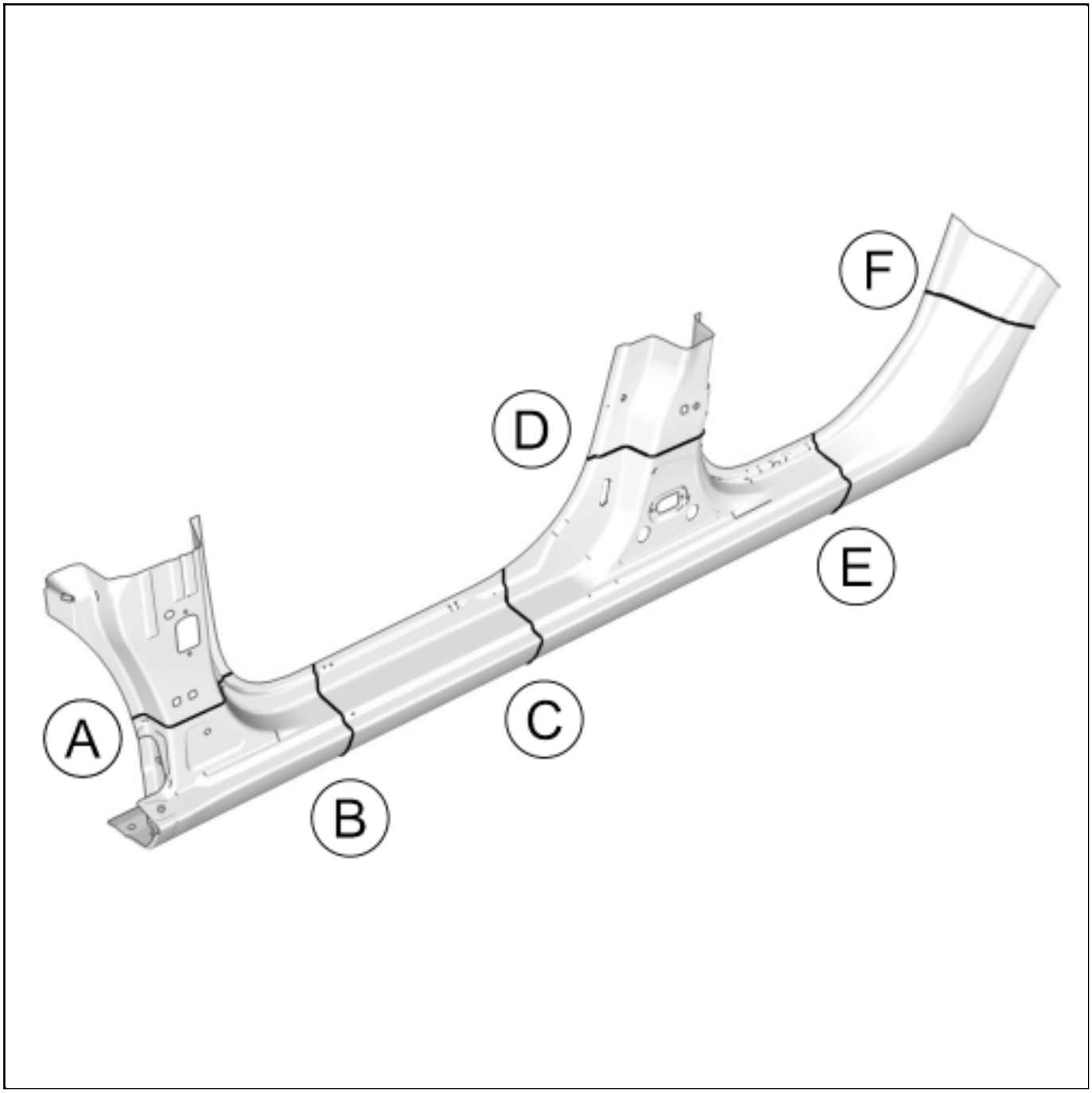

3- PART IN POSITION ON THE VEHICLE

The spare part is always shaded when shown on the vehicle.

The drawings prioritise the different parts depending on the replacement method.

The illustration should show the part to be replaced without the neighbouring components as if they have already been removed.

However, some diagrams may not follow this rule in order to better depict the part in its location.

The structural repair methods are carried out using uncoated steel bodywork panels. The original mastics are not illustrated.

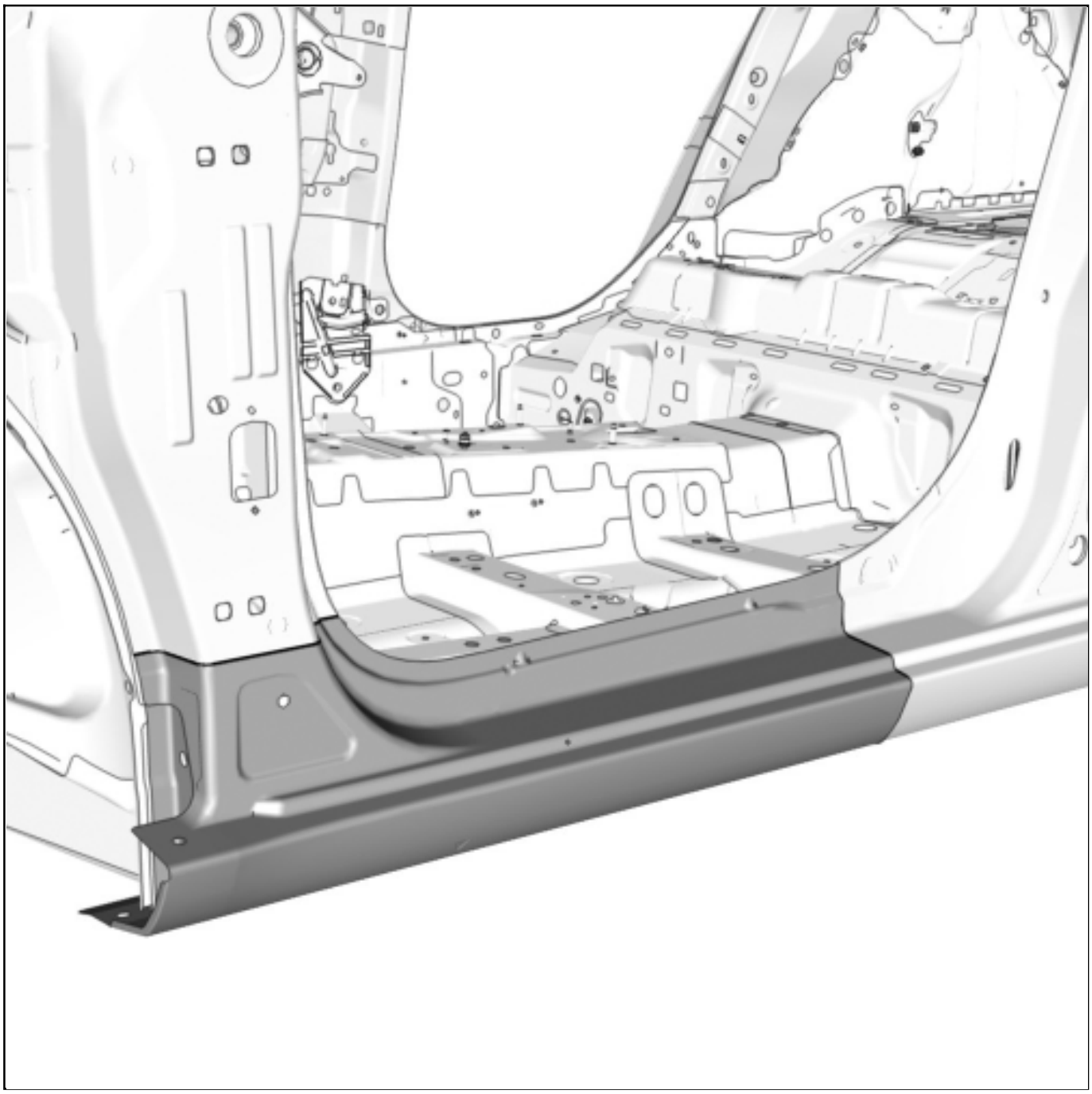

The hidden parts of the spare part are shown with dotted lines.

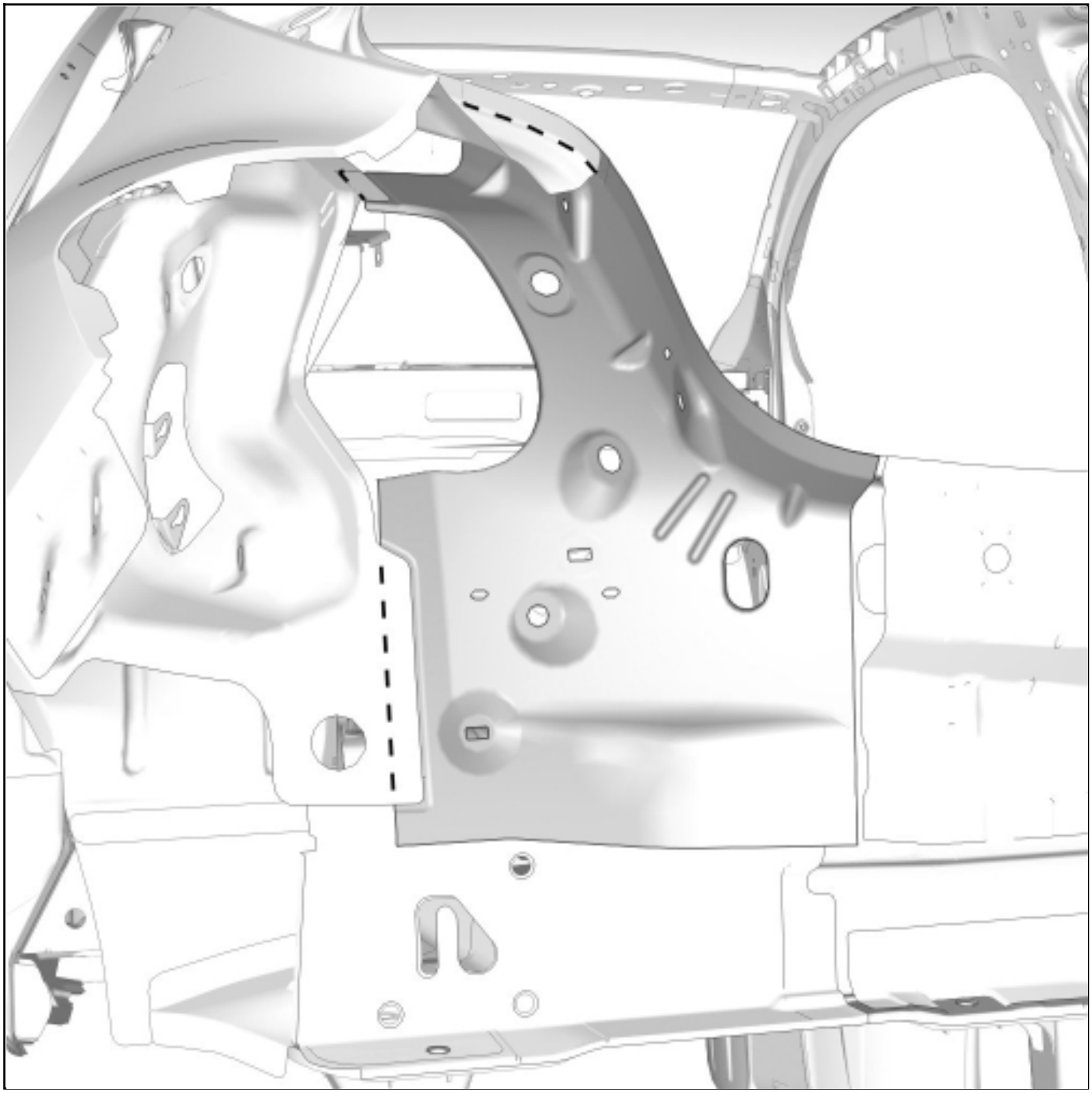

When a part is symmetrical (identical right and left side), there will only be one side shown in the method (e.g.: partial replacement of rear section rear floor).

This means that the same operation is to be carried out on the opposite side (number of spot welds, etc.).

If the opposite is the case, specific details are indicated (including cases with right- and left-hand versions).

The detailed views define the space between the part to replace and the vehicle structure.

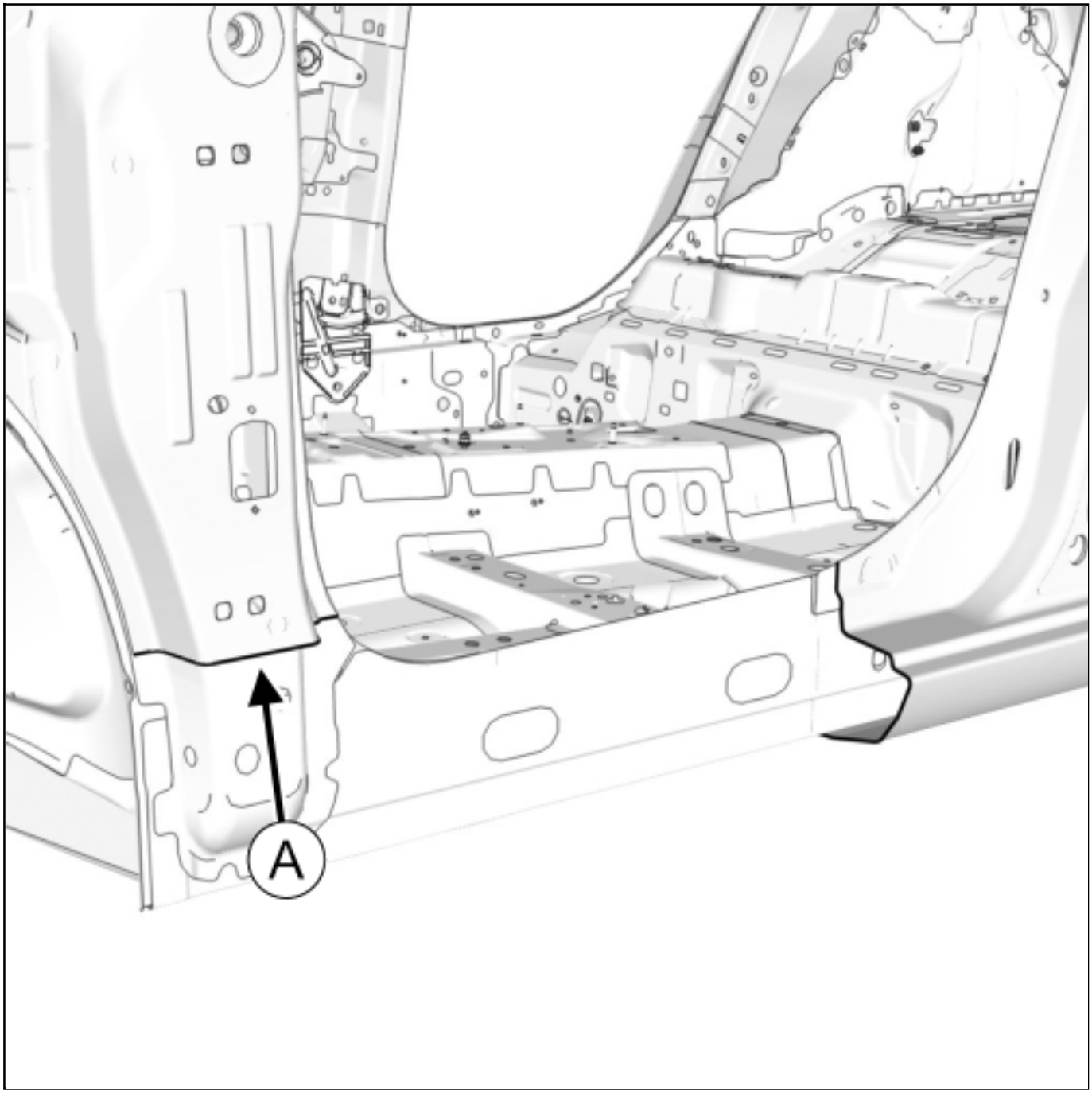

The mark(A) designates the viewing direction of the detailed view for proper orientation of the associated detailed view.

DETAILED VIEW A

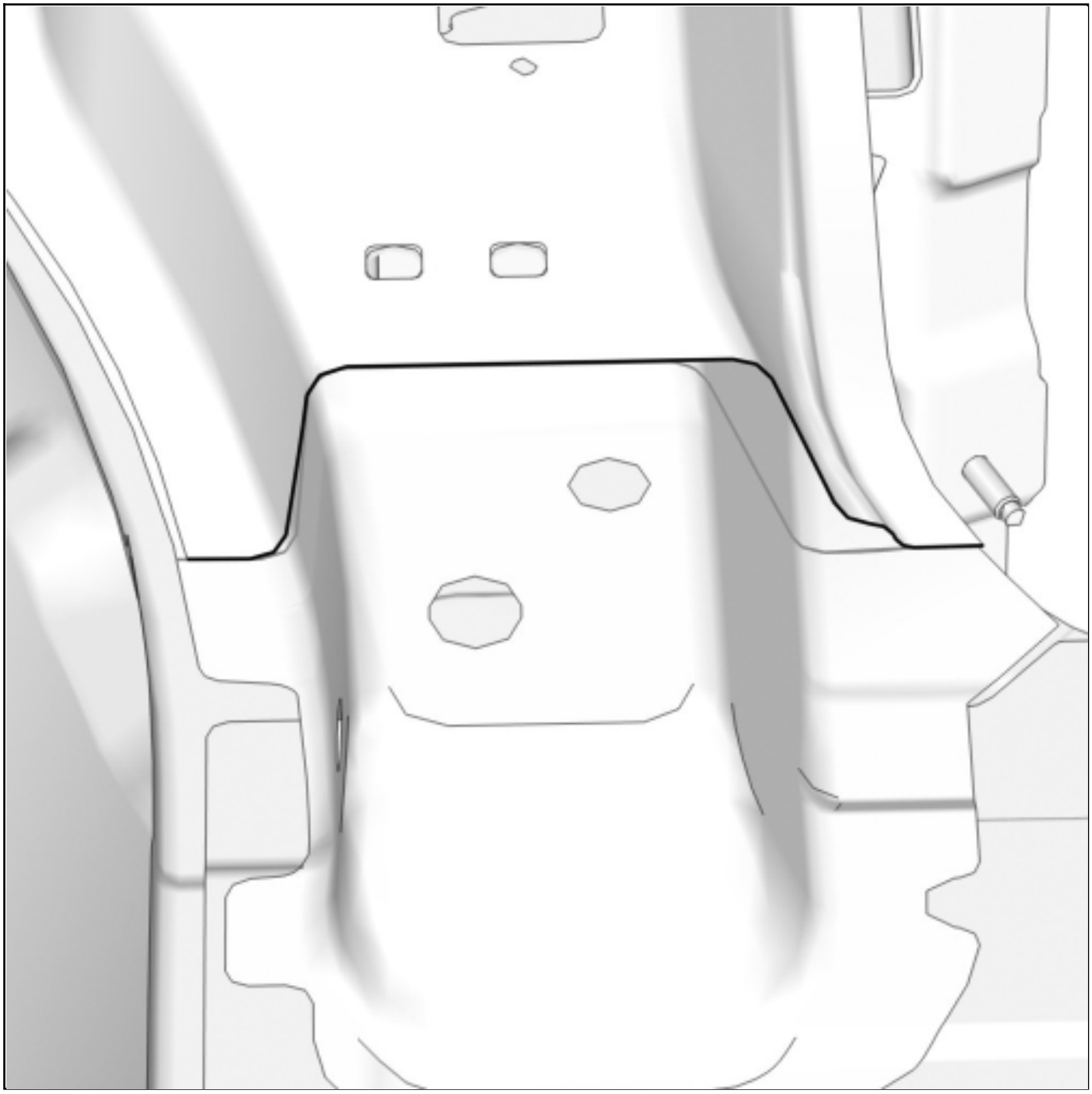

5- SYMBOLS FOR OPENING ELEMENT ADJUSTMENTS

Different symbols indicate the possibilities for adjustment:

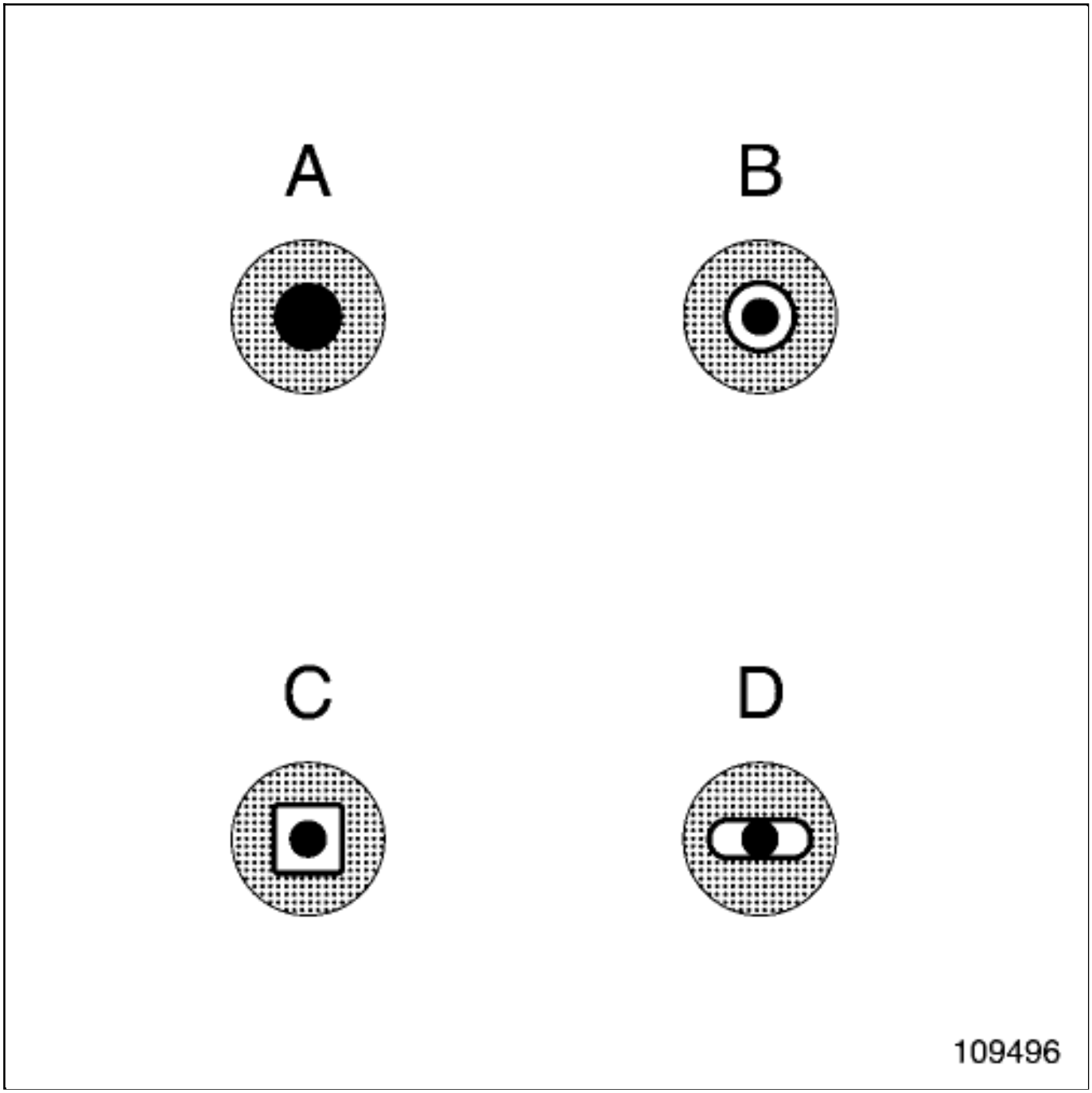

The mountings are shaded.

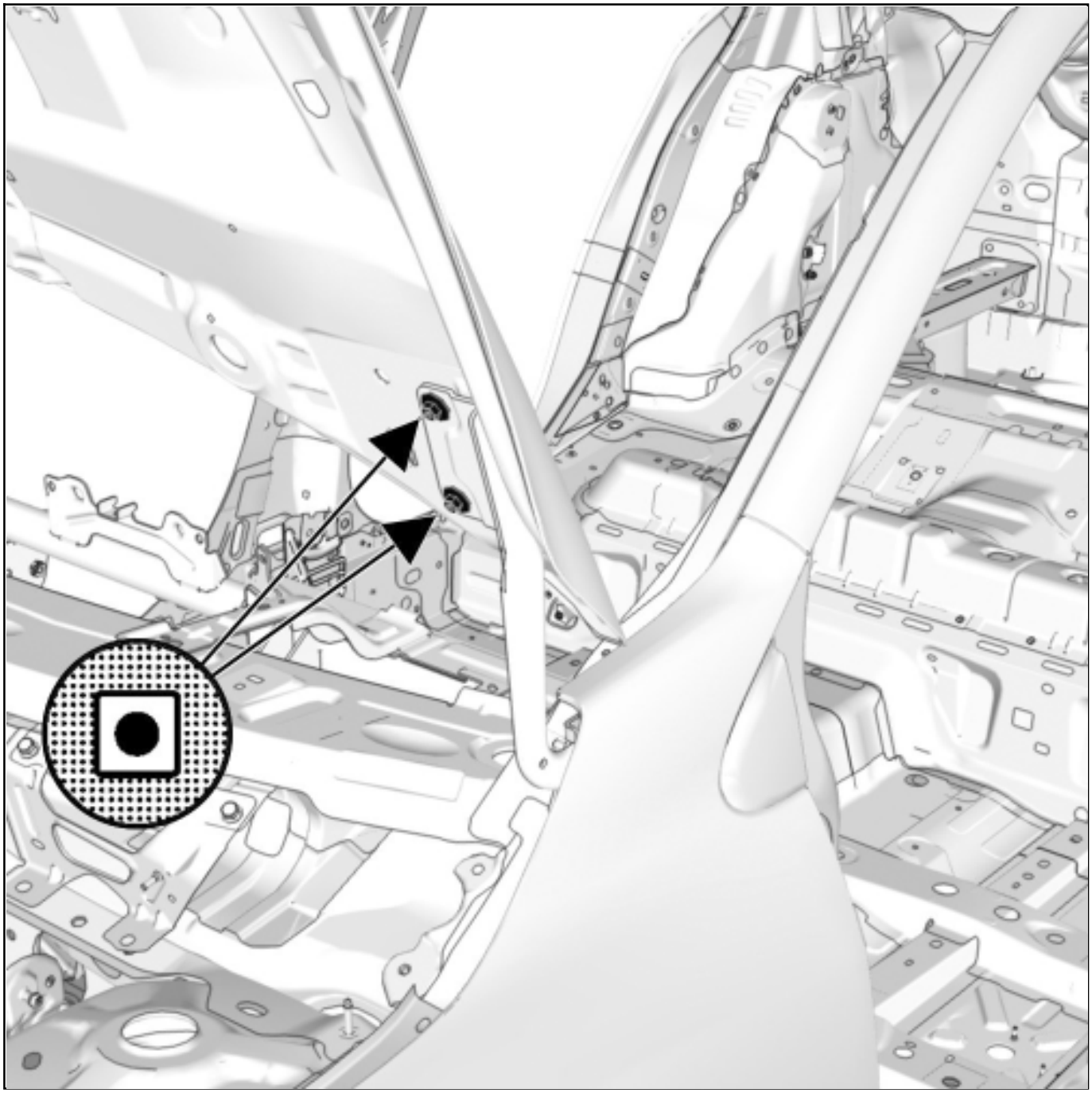

6- SYMBOLS FOR ADHESIVES AND MASTICS

A shaded band represents the path of a bead of adhesive or mastic.

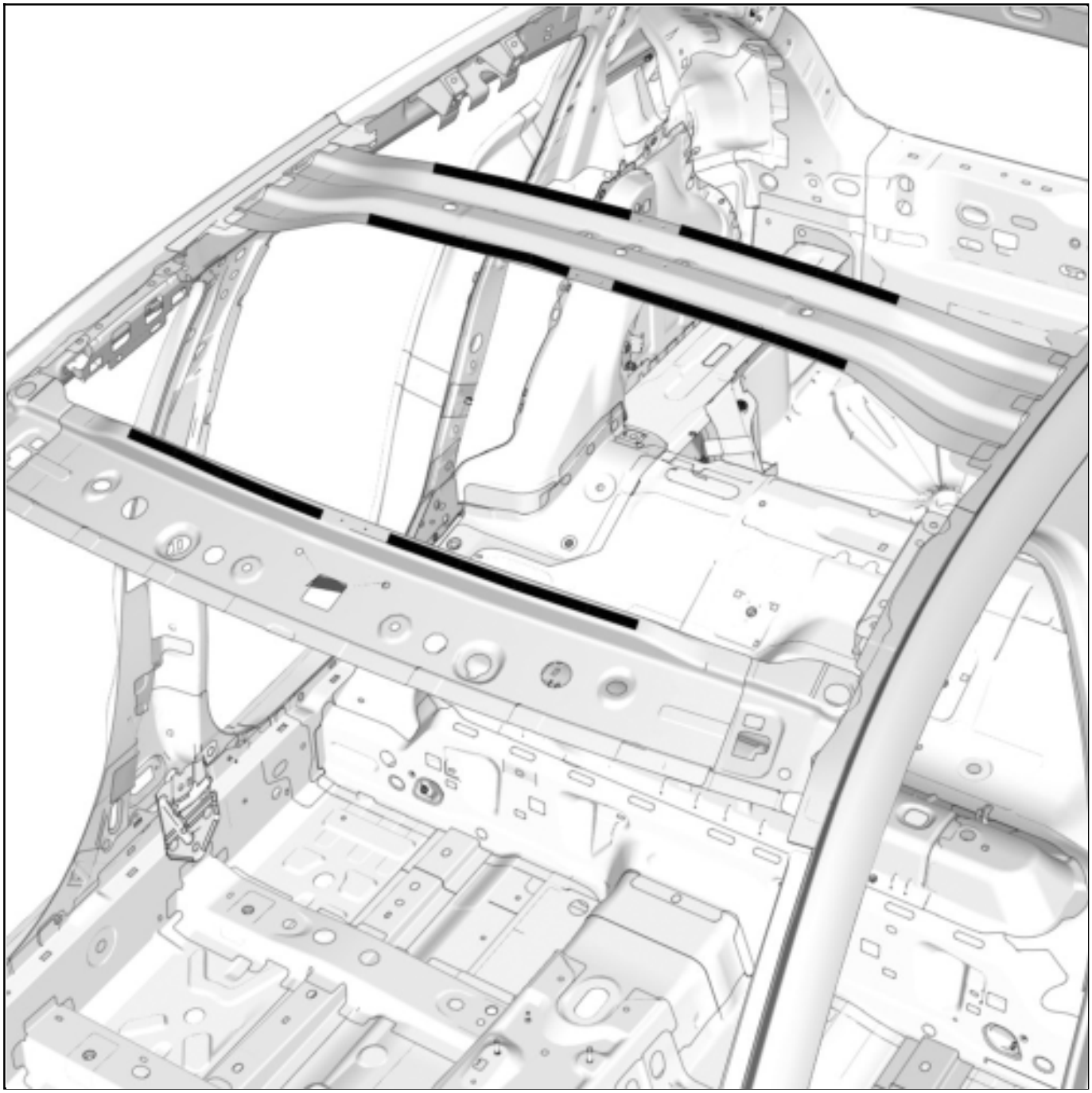

7- SYMBOLS FOR WELDS

Different symbols represent the type of weld to be made if it is not an original weld.

In case of superimposed or joggle welds, the type of weld to be made is indicated in the text accompanying the illustration.

SUPERIMPOSED WELD

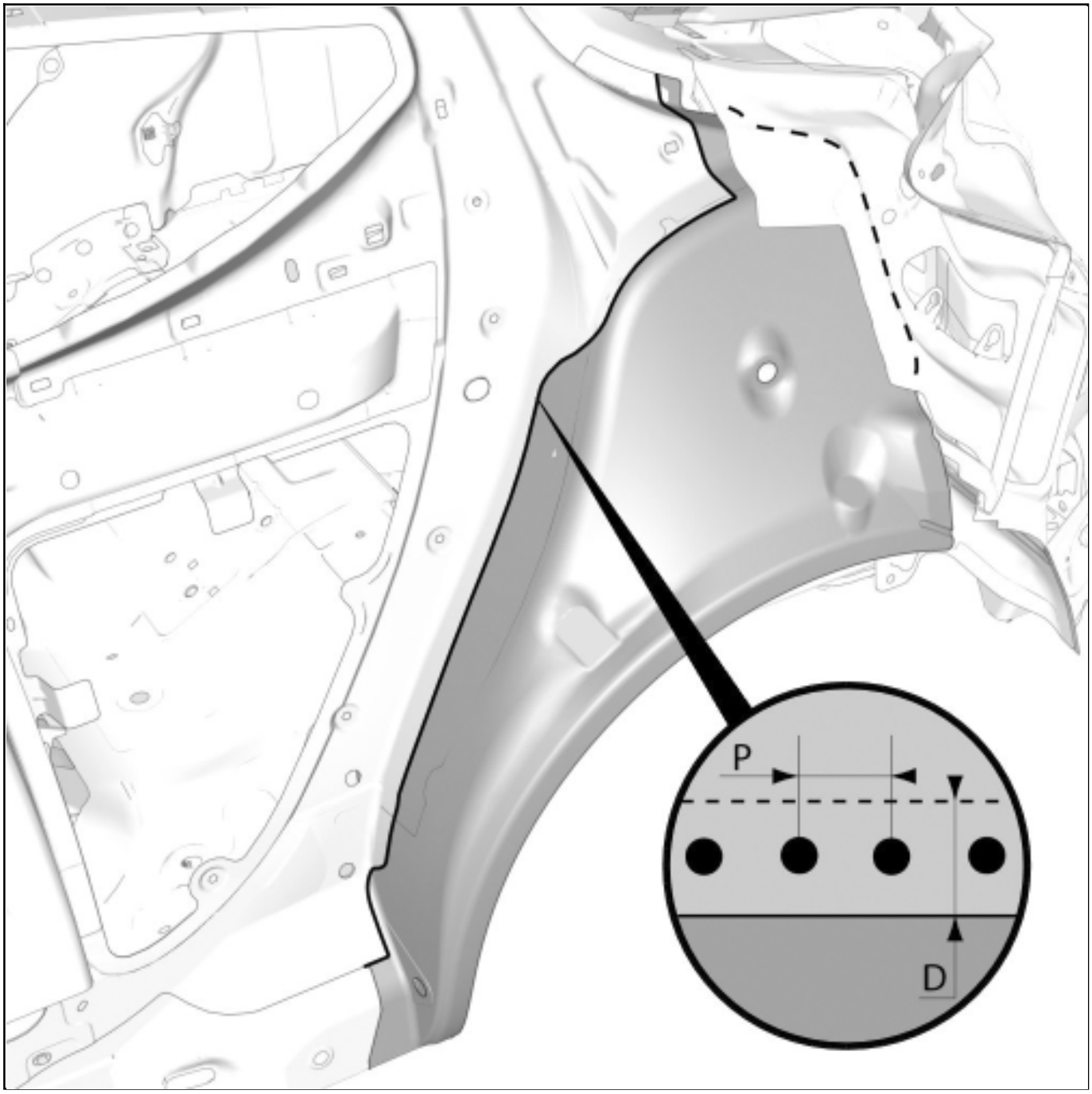

COMBINATION OF TWO TYPES OF WELDS

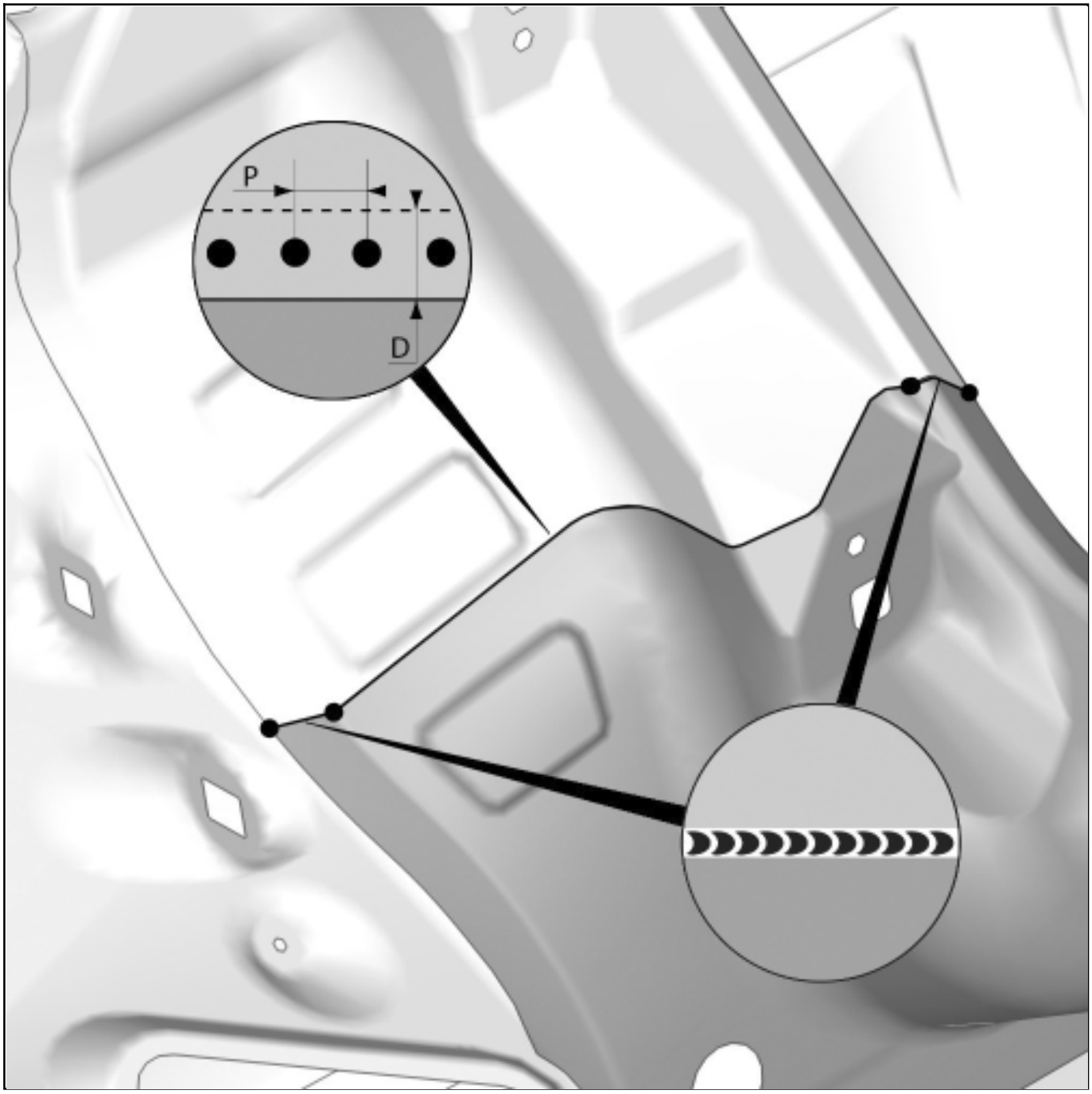

If two types of welds are used, points delimit the areas.

Repair-00x05x01-02x21-1-1-1.xml

XSL version : 3.02 du 22/07/11

TIGHTENINGTORQUES:GENERALINFORMATION

1. TABLE OF STANDARD TORQUES

Fastenings		Standard tightening torque (N.m)
Diameter	Property class	
M6	8.8	10
M8	8.8	25
M10	8.8	50
M10	10.9	62
M12	10.9	105
M14	10.9	180
M16	10.9	280
M18	10.9	400

SPECIAL NOTES ON ELECTRICAL EARTHS

Fastenings Diameter	Standard tightening torque (N.m)
M6	8
M8	21
M10	44

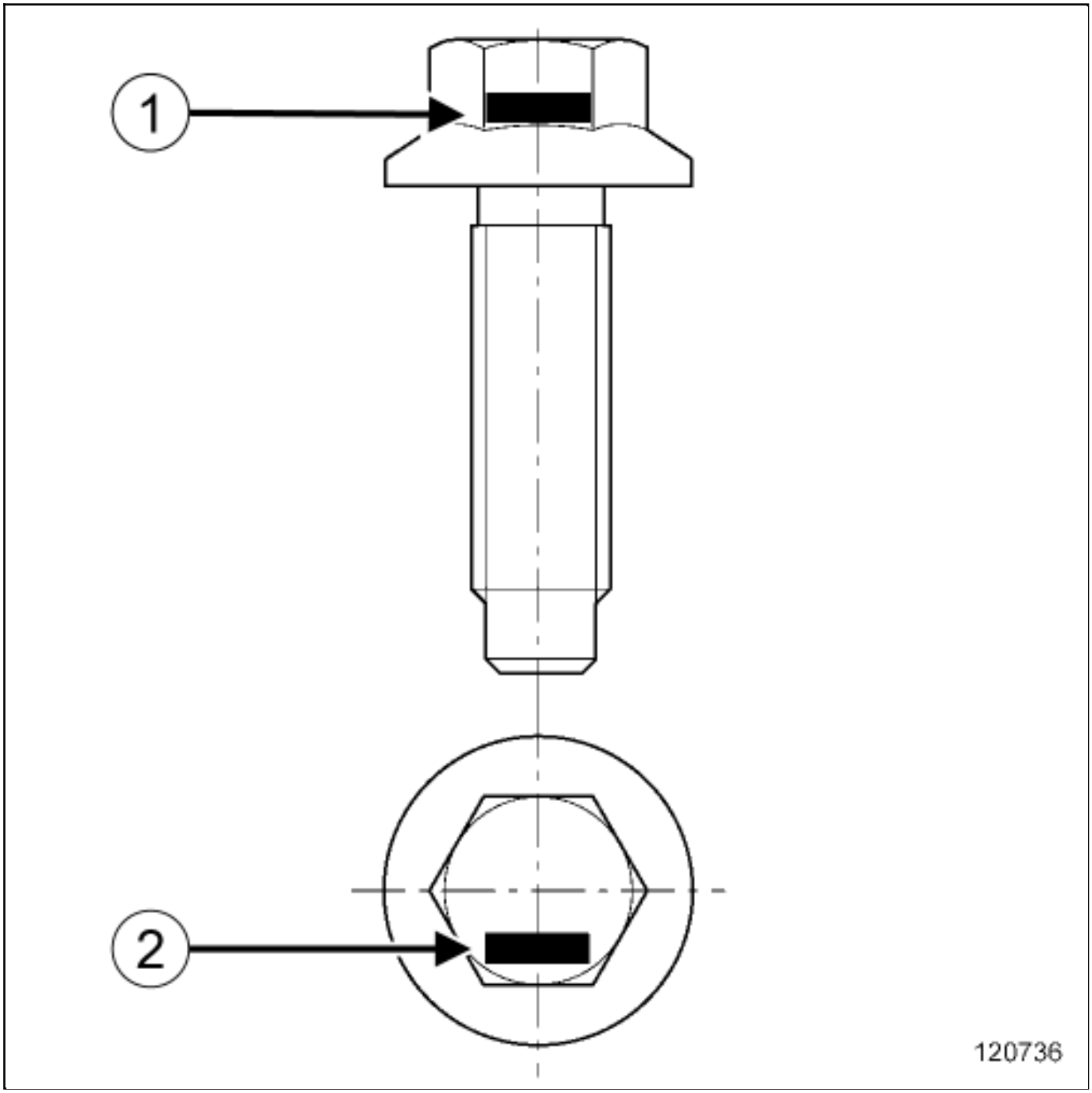

The property class is indicated on the bolt(1) or (2) .

2. FUNCTION OF A BOLTED ASSEMBLY

The bolting system connects parts of an assembly to prevent their separation or sliding when submitted to exterior forces.

EXTERIOR FORCES

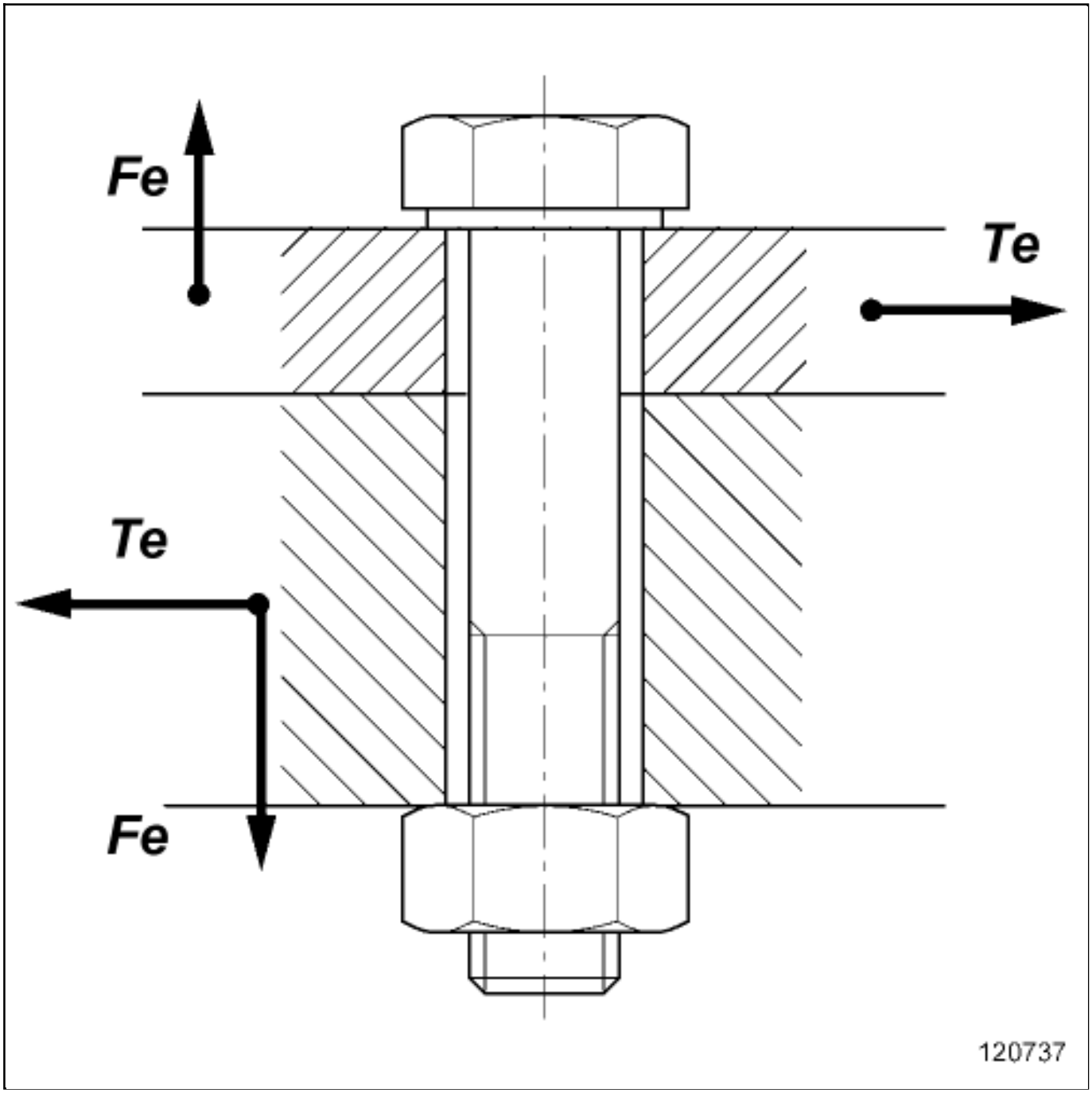

- The assembly is submitted to forces that are:
  - static and / or dynamic,
  - simple (e.g. simple traction),

- multiple (traction + flexion + torsion).

CREATING TENSION (OR PRELOAD) F0

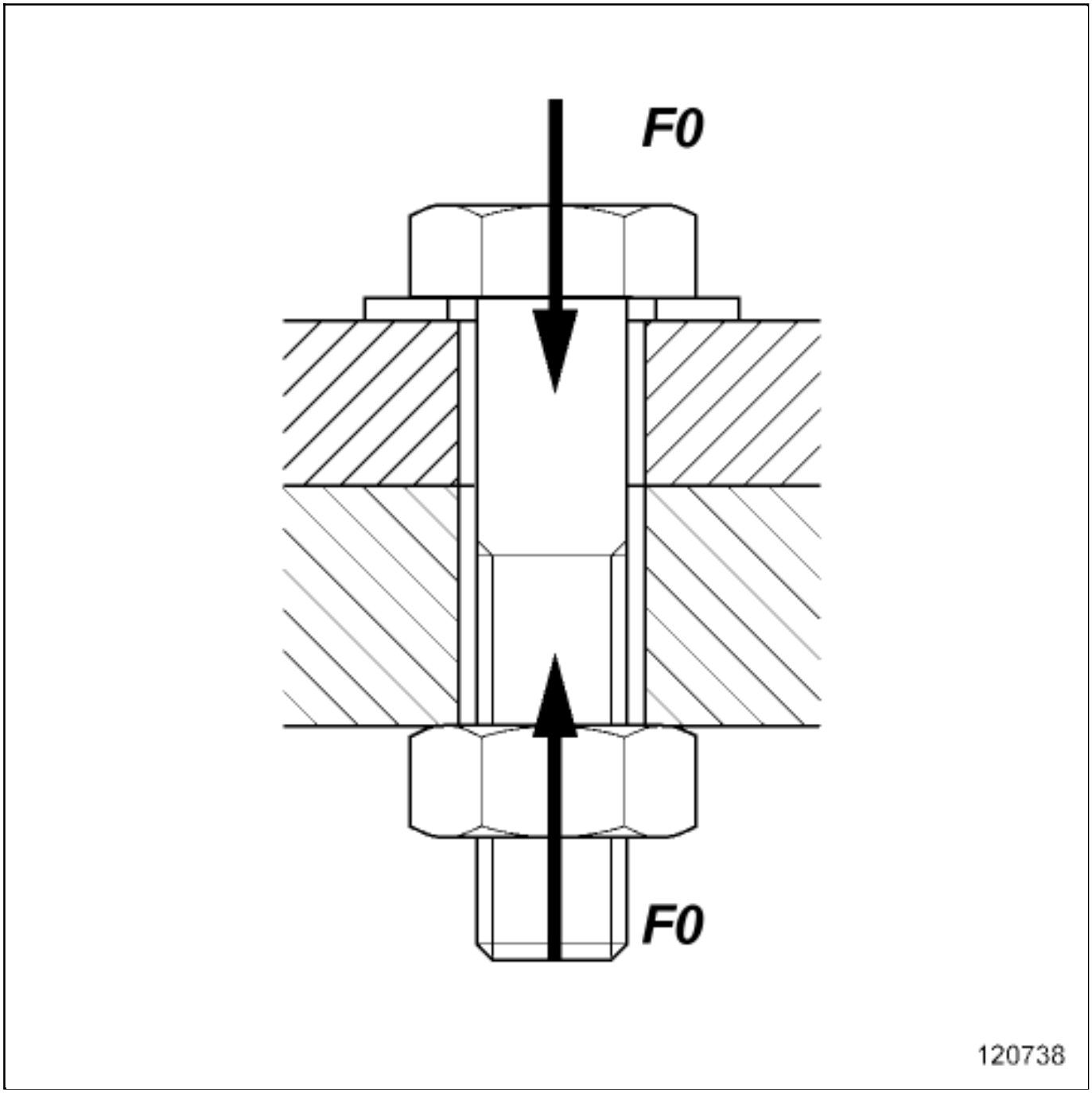

The assembly is held together by the tension created in the bolt when it is tightened.

A reliable assembly is only possible if the correct tension is used:

- insufficient tension: risk of loosening,
- too much tension: risk of deformation of the parts to be assembled, or shearing of the bolt.

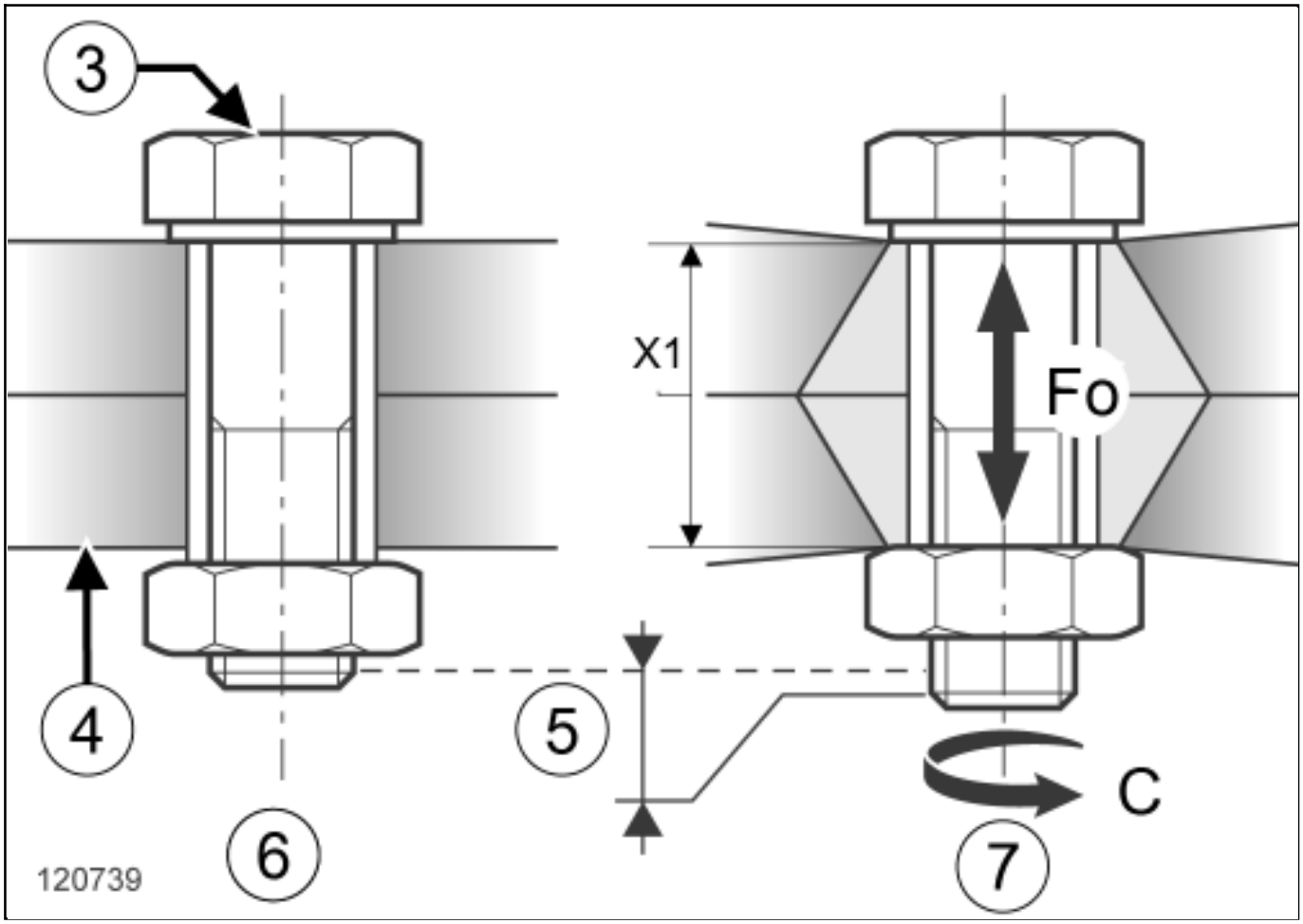

(3) Bolt

(4) Assembled components

(5) Extension of the bolt

(6) Non-tightened assembly

(7) Tightened assembly

(X1) Compression of the assembly

(Fo) Sensor

(C) Tightening torque

Customer complaints resulting from incorrect tightening may be, following assembly, a safety issue (fire, loss of control of the vehicle etc.), an immobilising fault or a noise.

3. TIGHTENING PROCEDURES

The two controlled tightening procedures adapted to automotive repairs because of their low cost and simple operation are torque tightening and angle tightening (also called torque and angle).

1- TORQUE TIGHTENING

This is the most commonly used procedure. Is consists of tightening until a given resisting torque is reached, known as tightening torque.

The tightening torque is distributed in a large part as friction torque (under the head and in the thread) and in a small part as useful torque (to create the tension).

This practise spreads the tension significantly due to the variation in the friction coefficients from one assembly to another and the uncertainty of the tightening procedures and methods.

2- ANGLE TIGHTENING

The principle consists of putting the parts of the assembly in contact using a mating torque (approximately 25 to 30% of the final torque) then to tighten to a determined angle.

This method, which is not dependent on the friction of the tightened assembly, gives more precise results than torque tightening.

4. OBSERVING THE TIGHTENING TORQUES AND ANGLES

Bolted assemblies whose tightening torques and angles are explicitly specified in the removal / refitting procedures must be observed using the appropriate tools (torque wrench, angle measuring disc). Failure to observe this can lead to safety risks, immobilising faults or unwanted noises.

For other bolted assemblies, non-measured tightening (using standard spanners) is acceptable. Nevertheless, the corresponding tightening torque is indicated in the table of standard tightening torques.

5. RECOMMENDED TIGHTENING TOOLS

For measured tightening, the repairer must have available torque wrenches to tighten from 4 to 400 N.m as well as an angle measuring disc.

The torque wrenches used may be click type or electronic.

- For example:

- 1 torque wrench 4 - 40 N.m,
- 1 torque wrench 20 - 100 N.m,
- 1 torque wrench 80 - 400 N.m,
- 1 angle measurement disc.

The torque wrenches used must comply with the ISO 6789standard. They must be calibrated regularly following the supplier's recommendations using the appropriate procedures.

6. PRECAUTIONS WHEN USING A CLICK TYPE TORQUE WRENCH

A click type torque wrench is a manual tightening tool. The trigger mechanism causes a break or disengagement of the wrench past a force threshold.

This threshold depends on the setting of the wrench but also depends on the way the wrench is handled.

When used following best practises, the accuracy of the tightness when using a click type torque wrench is ± 15%.

The instructions to be observed are:

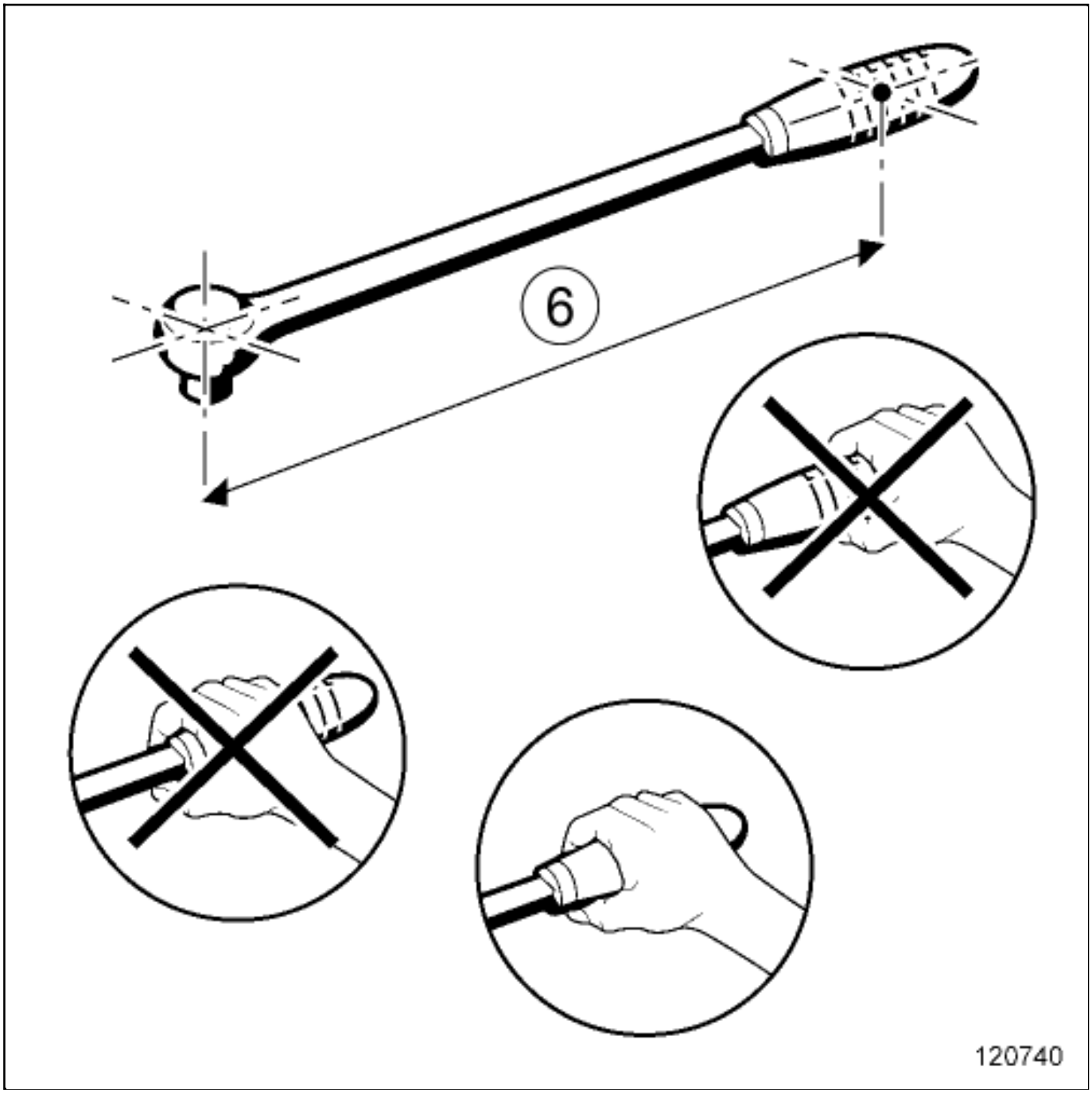

(6) lever arm

- Place the hand in the centre of the handle. An incorrectly positioned hand on the handle will alter the trigger threshold.

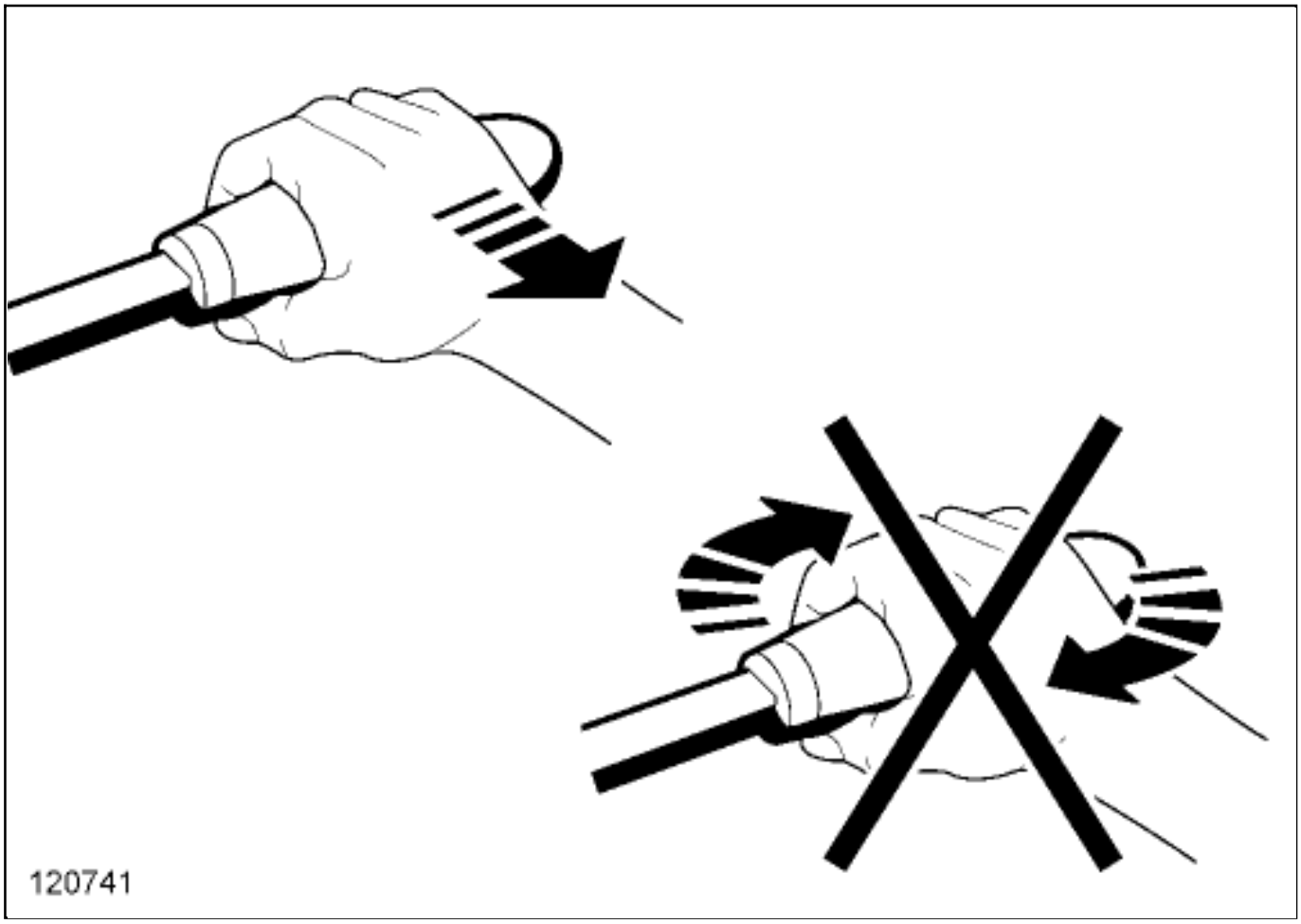

- Pull the wrench gently and steadily, without applying any torsion. Excessive tightening speed as well as jerkiness are major causes of overtightening. Any torsion applied to the wrench will alter the trigger threshold.

- Hold the wrench on the bolt using a minimum of effort. Any effort applied to the wrench head will alter the trigger threshold.

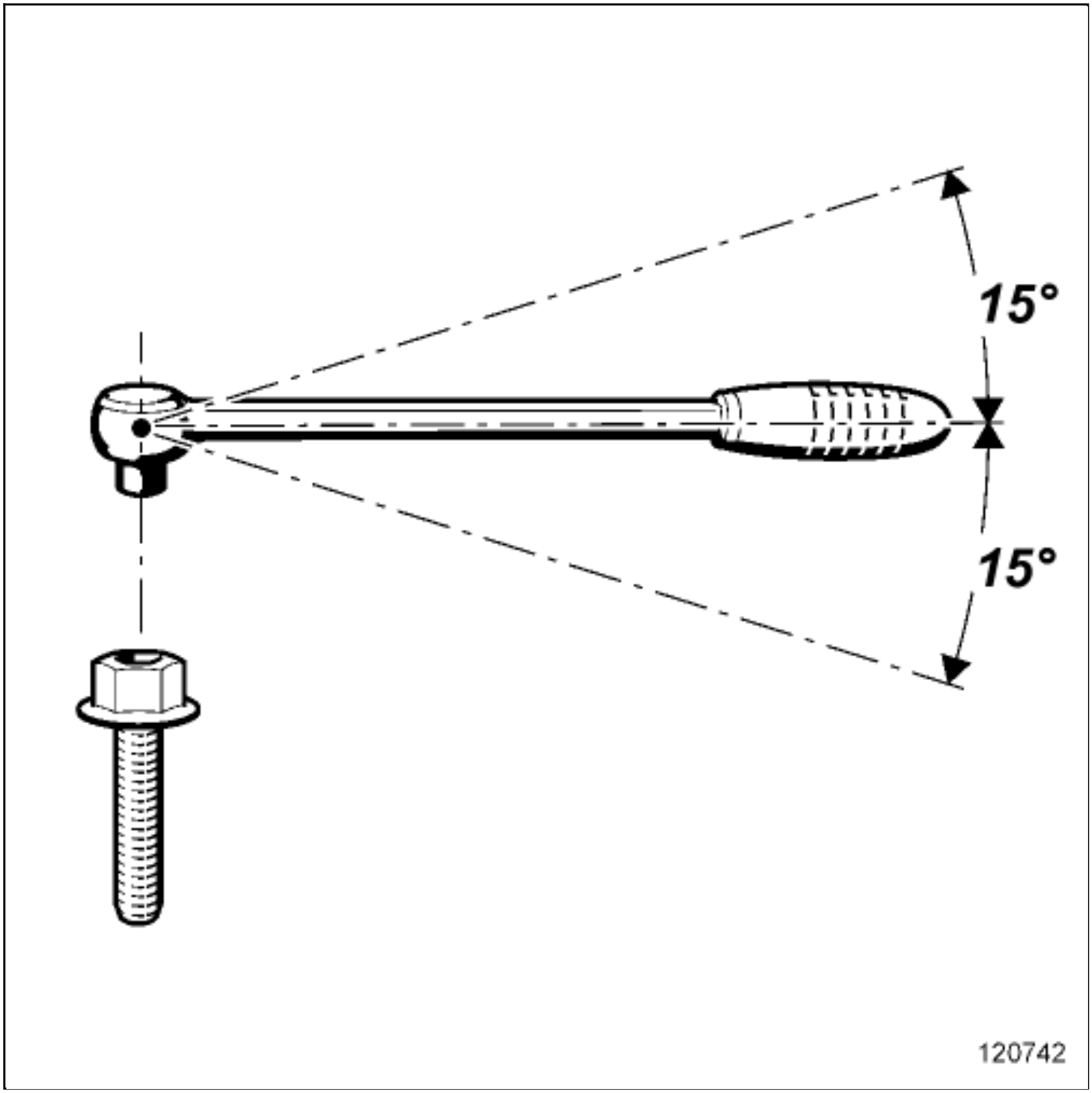

- Apply the tightening effort perpendicular to the mounting observing a tolerance of ± 15˚ relative to the perpendicularity. If the wrench is not perpendicular to the mounting axis, this will result in insufficient tightening.

- Stop tightening as soon as the wrench is triggered. Continued tightening after the wrench is triggered will lead to overtightening.

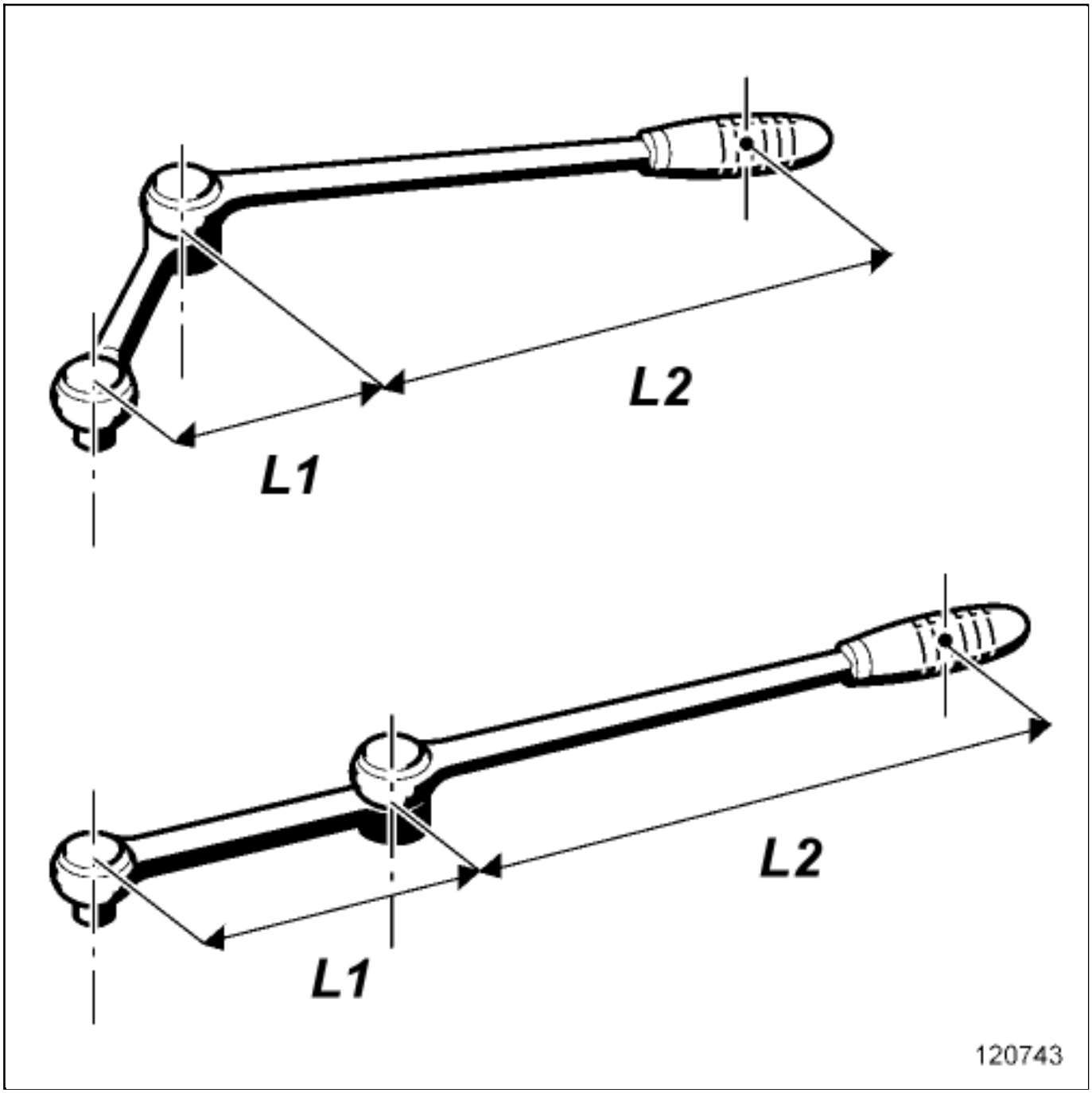

If the length of the wrench is modified (extending the handle, adapting an end piece) it is essential to recalibrate the wrench to its new configuration.

Modifying the length of the wrench will modify its trigger threshold.

- Use the formula: C1 = CO x L2 / (L1+L2)
  - CO: torque to apply,
  - C1: adjustment torque to be displayed on the wrench,

- L1: length of the extension,
- L2: length of the wrench.

Unless there are special instructions in the repair method, a universal joint (CARDAN joint type) should be used for measured tightening. Using a universal joint will result in a difference between the set torque of the wrench and the actual torque applied.

Before storing the wrench, loosen the adjustment spring completely. A wrench stored with a spring under tension will lose its tightening accuracy.

7. PRECAUTIONS WHEN USING ELECTRONIC TORQUE WRENCHES

An electronic torque wrench is a manual tightening tool. The tightening torque and, depending on the model, the angle is read directly.

When used following best practises, the accuracy of the tightness when using an electronic torque wrench is ± 5%.

Electronic torque wrenches are not affected by the position of the operator's hand.

It is advisable to handle the wrench with care and to stop tightening when the required value is displayed on the wrench.

TRACTION BATTERY ASSEMBLY: EXPLODED VIEW

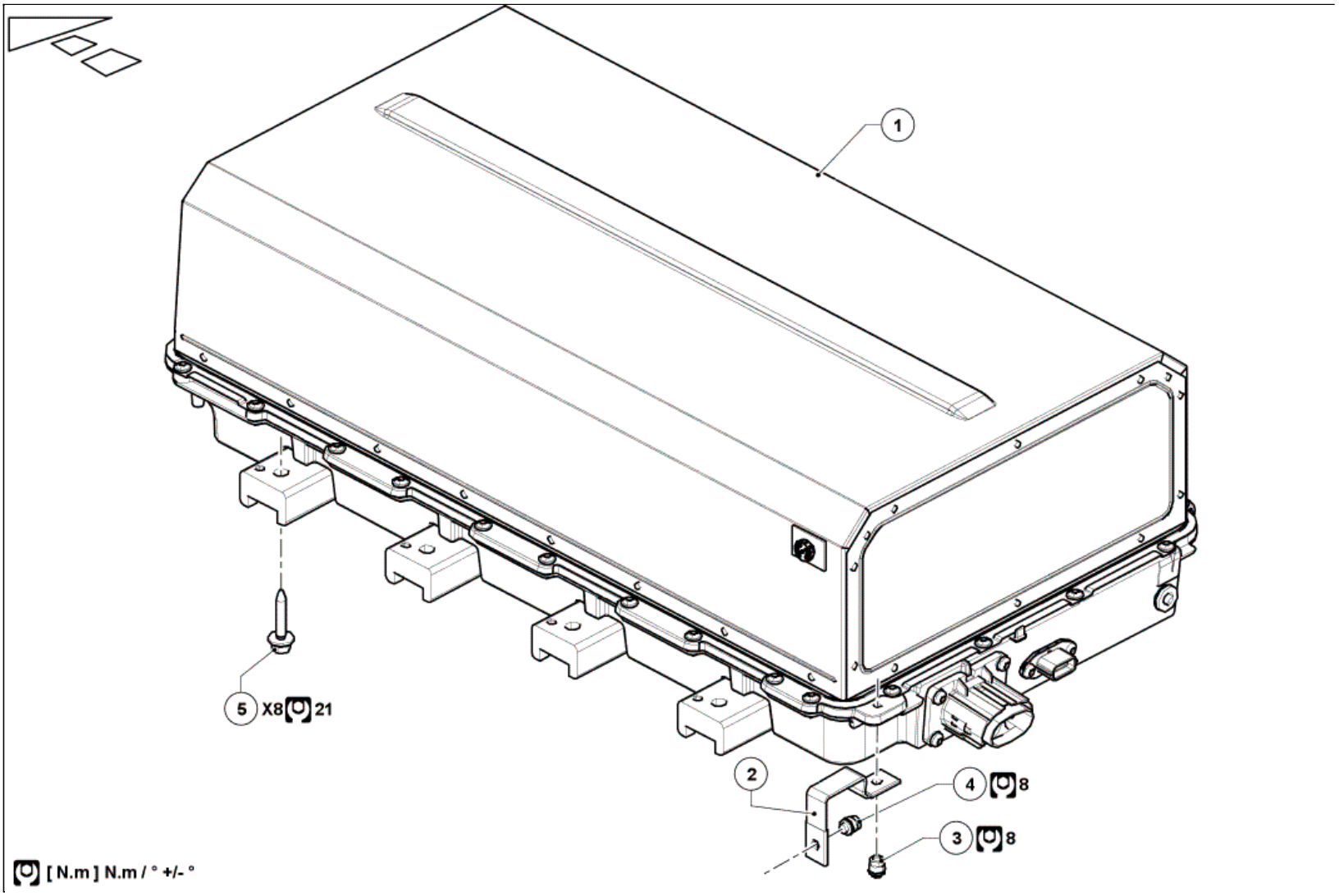

Illustration key: Description .

Marks	Designations	Informations
1	Traction battery assembly	(see 19E, Traction battery, Traction battery assembly: Removal - Refitting)
2	Traction battery ground strap	
3	Traction battery ground strap bolt on traction battery	
4	Traction battery ground strap nut on body	
5	Traction battery bolts	

Repair-14x02x01-02x50-1-2-1.xml

XSL version : 3.02 du 22/07/11

TRACTION BATTERY ASSEMBLY: REMOVAL-REFITTING

Note, one or more warnings are present in this procedure

Special tooling required	
Lift table	Ms. 1976
Tool for removing/refitting the traction battery	Ms. 1968
Kit of removal/refitting traction battery	Ms. 1988

Equipment required
Diagnostic tool
Class 00 or 0 electrical insulating gloves
Face shield
Bump cap
Electrical class 00 or 0 safety footwear
Protective overalls (Mainly coton)

WARNING

To avoid all risk of damage to the systems, apply the safety and cleanliness instructions and operation recommendations before carrying out any repair:

- Wiring: Precautions for the repair ,
- Vehicle: Precautions for the repair .

CAUTION

The traction battery in its function reaches high temperatures. Before working on the traction battery, make sure that the contact temperature is bearable.

CAUTION

To prevent disconnected connectors and sockets from all contamination, hermetically seal the connectors and sockets using a plastic bag (Ref: 82 01 274 401) and a clamping collar.

Location and specification (tightening torques, parts always to be replaced, etc.)(see 19E, Traction battery, Traction battery assembly: Exploded view) .

Note:

Remove all personal metal objects (jewels, watch,...).

Required equipment:

- Class 00 or 0 electrical insulating gloves,
- Face shield,
- Bump cap ,
- Electrical class 00 or 0 safety footwear,
- Protective overalls (Mainly coton).

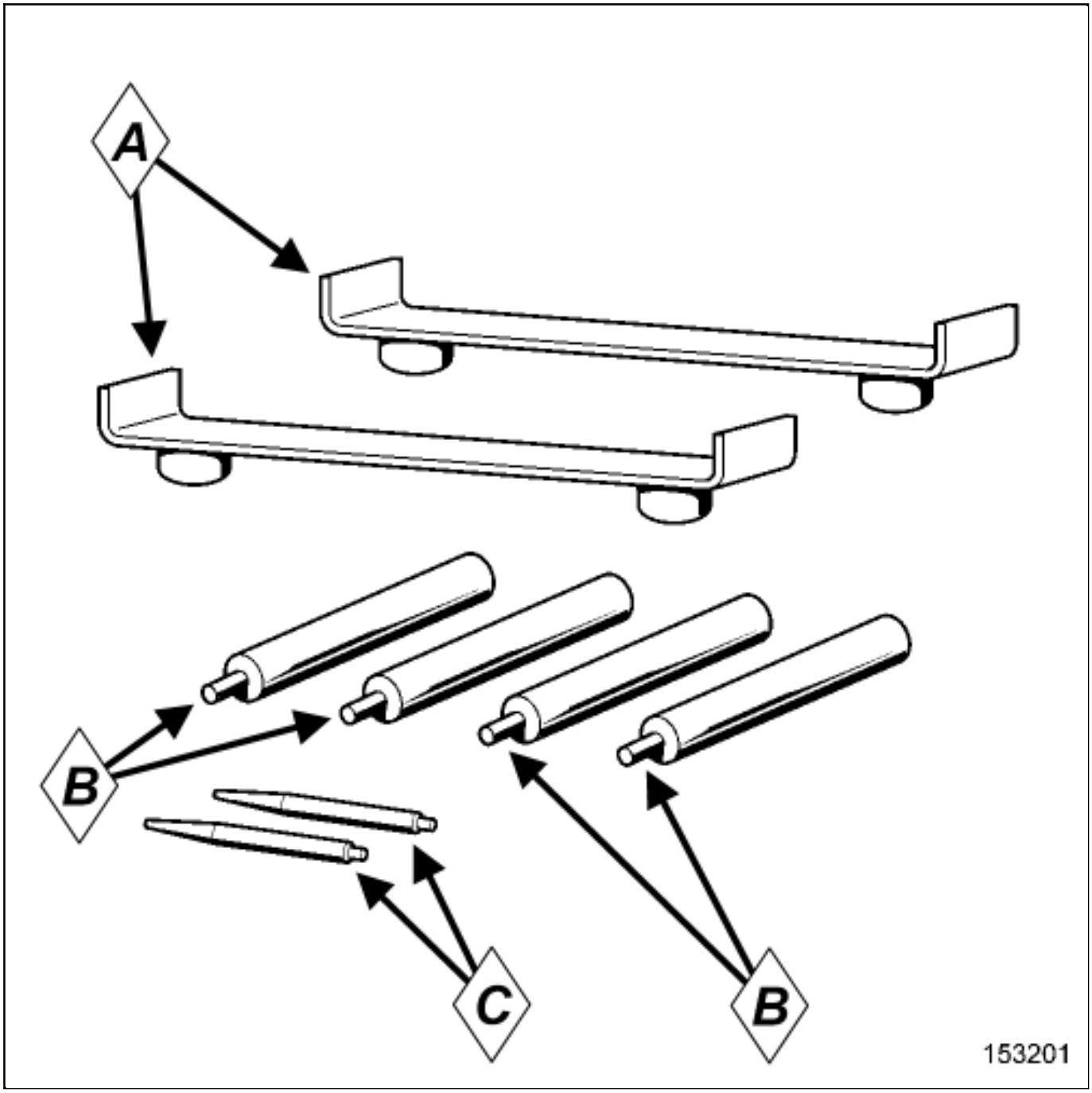

Composition of tool Kit of removal/refitting traction battery(Ms. 1988) :

- Traction battery supports(A) Ms. 1988 and(B) Ms. 1988 ,
- Traction battery centering pins(C) Ms. 1988 .

REMOVAL

1. REMOVAL PREPARATION OPERATION

- Position the vehicle on a two-post liftVehicle: Towing and lifting .

> Note:
>
> Make sure that arms are at the same height with regard to the ground, vehicule raised.

- Wear personal protective equipment during the removal operation:
  - Protective overalls (Mainly coton),
  - Electrical class 00 or 0 safety footwear,
  - Class 00 or 0 electrical insulating gloves,
  - Face shield,
  - Bump cap .

> Note:
>
> Check that the gloves are not damaged.

> **WARNING**
>
> DANGER: HIGH VOLTAGE VEHICLE.
>
> Risks of serious burns or electric shock that may prove fatal.
>
> Before carrying out any work on the vehicle, it is essential that you adhere to the instructions regarding vehicle voltage cut-off. This work must be carried out by an employee who is qualified and authorized to work on a high-voltage onboard network Vehicle: Precautions for the repair .

-

Remove the lockout of the vehicle Vehicle: Lockout - Removal of lockout .

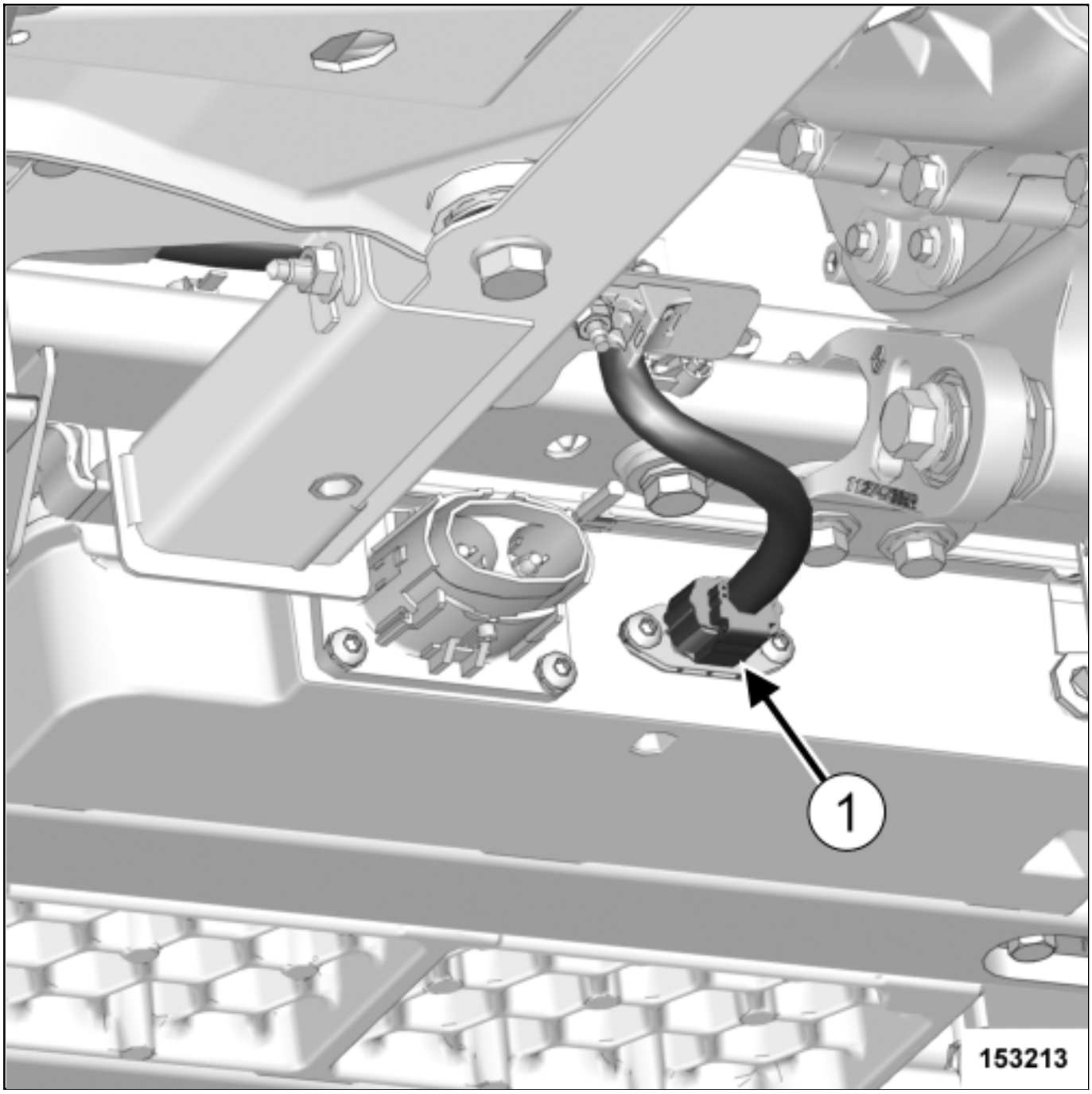

❑

Disconnect the signals wiring connector(1) on the rear side of the traction battery.

❑

Remove the traction battery ground strap bolt (see 19E, Traction battery, Traction battery assembly: Exploded view) .

2. REMOVAL OPERATION

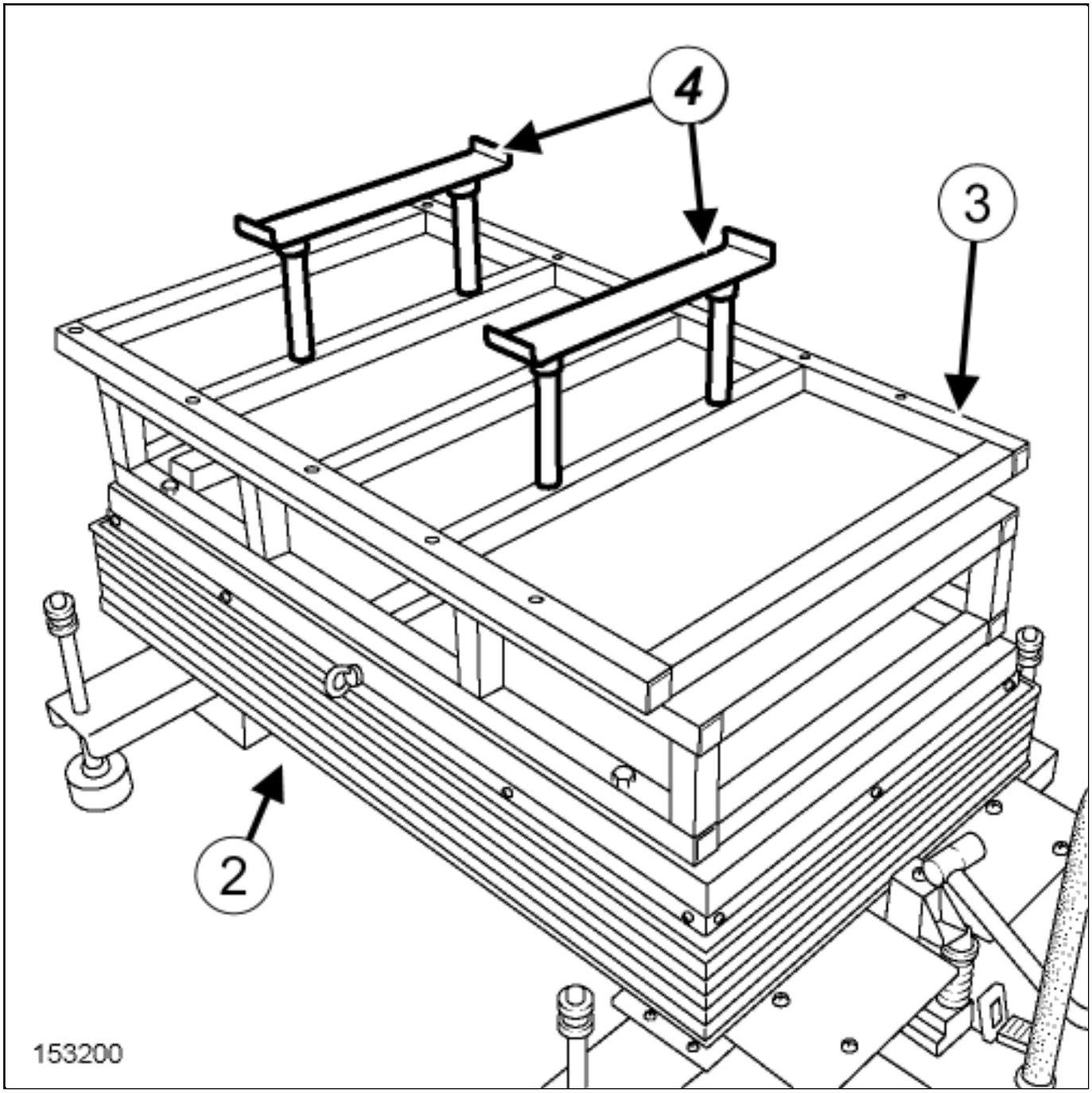

Position:

- the toolTool for removing/refitting the traction battery(**Ms. 1968**) (**3**) on the toolLift table(**Ms. 1976**) (**2**) ,
- the traction battery supports(**4**) of the toolKit of removal/refitting traction battery(**Ms. 1988**) on the tool Tool for removing/refitting the traction battery(**Ms. 1968**) .

Note:

Check that the lift table is centred with regard to the battery.

❑

Place the toolsLift table(Ms. 1976) , Tool for removing/refitting the traction battery(Ms. 1968) and Kit of removal/refitting traction battery(Ms. 1988) assembly under the traction battery.

❑

Approach the toolsLift table(Ms. 1976) , Tool for removing/refitting the traction battery(Ms. 1968) and Kit of removal/refitting traction battery(Ms. 1988) assembly 10 cmunder the traction battery.

❑

Measure the distance between the forth corners of the traction battery lower housing and the lift table plan with a ruler.

Note:

The lift table must be parallel to the traction battery lower housing plan.

❑

Ajust the lift tableTool for removing/refitting the traction battery(Ms. 1968) with the table feet to be parallel to the traction battery lower housing plan.

❑

Put in contact the toolsLift table(Ms. 1976) , Tool for removing/refitting the traction battery(Ms. 1968) and Kit of removal/refitting traction battery(Ms. 1988) assembly with the traction battery.

❑

Remove (see 19E, Traction battery, Traction battery assembly: Exploded view) :

- the traction battery bolts,
- the traction battery with the toolsLift table(Ms. 1976) , Tool for removing/refitting the traction battery(Ms. 1968) and Kit of removal/refitting traction battery(Ms. 1988) assembly.

Note:

During removing traction battery bolts, if the lift tableLift table(Ms. 1976) goes down slightly, give one or two shots pedal to adjust the height of the whole.

WARNING

To prevent any risk of an accident, do not move the lift table in the up position with a traction battery. Always strap traction batteries on the lift table when moving.

- Protect the traction battery connector socketsWiring: Precautions for the repair .

- For all movement and stocking(see 19E, Traction battery, Traction battery : Lifting) .

WARNING

To prevent any risk of an accident, when lifting a battery, do not move the crane with the jib in the raised position.

REFITTING

1. REFITTING OPERATION

- For all movement and stocking(see 19E, Traction battery, Traction battery : Lifting) .

WARNING

To prevent any risk of an accident, do not move the lift table in the up position with a traction battery. Always strap traction batteries on the lift table when moving.

-

Remove the traction battery connector sockets protectionsWiring: Precautions for the repair .

❑

Fit the traction battery centering pins of the toolKit of removal/refitting traction battery(Ms. 1988) in place of the two opposite corner bolts of the traction battery.

❑

Place the toolsLift table(Ms. 1976) , Tool for removing/refitting the traction battery(Ms. 1968) and Kit of removal/refitting traction battery(Ms. 1988) assembly under the vehicle.

❑

Raise the traction battery with the toolsLift table(Ms. 1976) , Tool for removing/refitting the traction battery (Ms. 1968) and Kit of removal/refitting traction battery(Ms. 1988) until the contact on the body.

Note:

For this operation, the traction battery must be guiden with the centerings pins of the tool Kit of removal/refitting traction battery(Ms. 1988) .

❑

Remove the battery centering pins of the toolKit of removal/refitting traction battery(Ms. 1988) from the body.

❑

Refit the traction battery bolts(see 19E, Traction battery, Traction battery assembly: Exploded view) .

❑

Remove the toolsLift table(Ms. 1976) , Tool for removing/refitting the traction battery(Ms. 1968) and Tool for removing/refitting the traction battery(Ms. 1968) .

❑

Proceed in the reverse order to removal.

2. FINAL OPERATION

❑

Lockout the vehicleVehicle: Lockout - Removal of lockout .

❑

Carry out the necessary operations using the Diagnostic toolsee (Fault finding - Replacement of components) (83A, Instrument panel).

Repair-14x02x01-01x37-1-3-1.xml

XSL version : 3.02 du 22/07/11

TRACTION BATTERY CHARGING CABLE : REMOVAL - REFITTING

Note, one or more warnings are present in this procedure

WARNING

To avoid all risk of damage to the systems, apply the safety and cleanliness instructions and operation recommendations before carrying out any repair:

- (see 88A, Wiring harness , Wiring: Precautions for the repair) ,
- Vehicle: Precautions for the repair .

REMOVAL

1. REMOVAL PREPARATION OPERATION

Position the vehicle on a two-post lift Vehicle: Towing and lifting .

WARNING

DANGER : Risk of serious injuries due to the short-circuiting or the untimely triggering of an electrical system (pyrotechnical parts, windscreen wiper motor, electric fan, etc.) following possible loopback of the 12-volt supply circuit by the voltage transformer.

Please adhere to the instructions regarding cut-off of the 12-volt supply circuit.

If the procedure fails, do not continue with your task and ask an employee who is qualified and authorized to work on a high-voltage onboard network to perform a diagnostic Vehicle: Precautions for the repair .

Lockout the 12V supply circuit12 V supply circuit : Lockout - Removal of lockout .

2. REMOVAL OPERATION

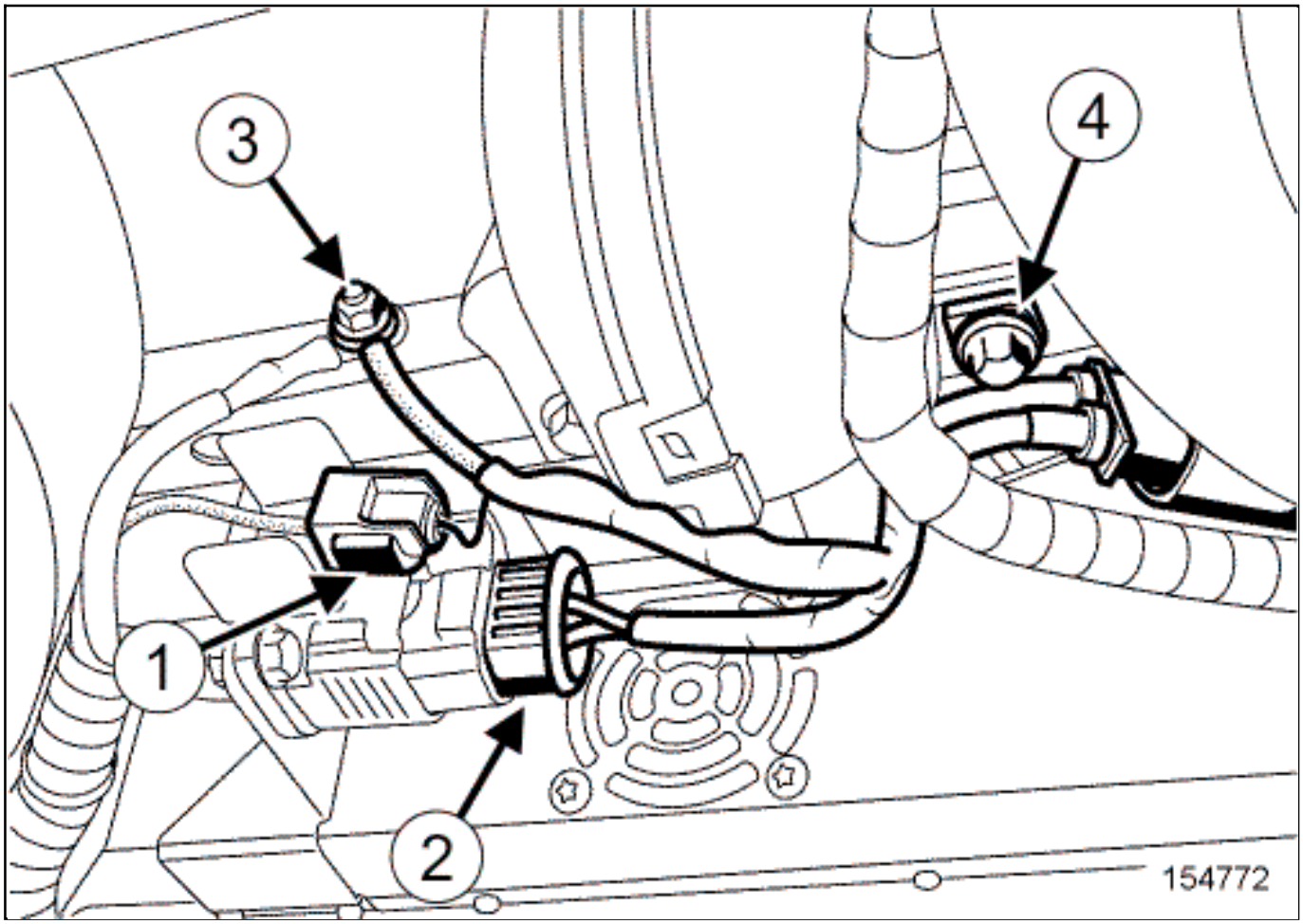

Disconnect:

- the traction battery charging cable signal connector(1) ,
- the traction battery charging cable connector(2) .

Remove:

- the traction battery charging cable ground nut(3) ,
- the mounting bolt(4) of the traction battery charging cable.

- Open the traction battery charging plug flap Exterior body front trim assembly: Exploded view .
- Remove the traction battery charging cable.

REFITTING

1. REFITTING OPERATION

- Proceed in the reverse order to removal.
- Torque tighten:
  - the traction battery charging cable ground nut 8 N.m,
  - the mounting bolt of the traction battery charging cable 8 N.m.

2. FINAL OPERATION

- Remove the lockout of the 12V supply circuit 12 V supply circuit : Lockout - Removal of lockout .

TRACTION BATTERY COMPUTER: REMOVAL - REFITTING

Note, one or more warnings are present in this procedure

Special tooling required	
Set of trim removal levers.	Car. 1363

Equipment required
Diagnostic tool

Locations and specifications (tightening torques, parts always to be replaced, etc.)(see 19E, Traction battery, Traction battery module stack assembly : Exploded view) .

WARNING

❑ To avoid all risk of damage to the systems, apply the safety and cleanliness instructions and operation recommendations before carrying out any repair:

- (see 19E, Traction battery, Traction battery : Precautions for the repair) ,
- Vehicle: Precautions for the repair .

WARNING

DANGER: HIGH VOLTAGE VEHICLE.

Risks of serious burns or electric shock that may prove fatal.

Before carrying out any work on the vehicle, it is essential that you adhere to the instructions regarding vehicle voltage cut-off. This work must be carried out by an employee who is qualified and authorized to work on a high-voltage onboard network.

REMOVAL

1. REMOVAL PREPARATION OPERATION

❑ Apply the Before repair procedure using the Diagnostic tool(see **Diagnostic tool : Use**) :

-Computer concerned by the Before repair procedure:

■"Traction battery computer" .

❑ Remove the traction battery upper cover(see 19E, Traction battery, Traction battery housing assembly : Exploded view) .

2. REMOVAL OPERATION

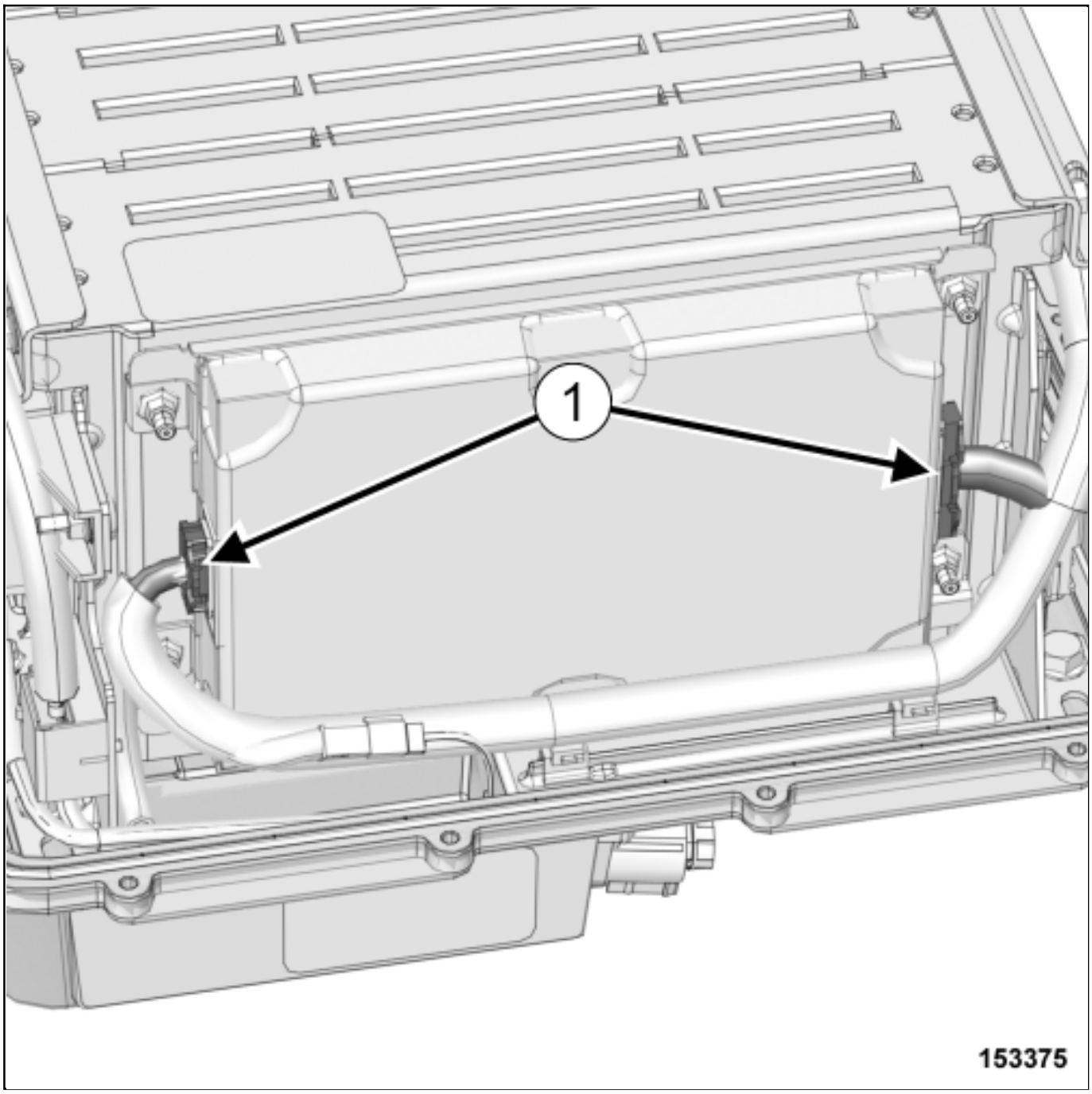

❑

Disconnect the traction battery computer plugs(1) using the toolSet of trim removal levers.(Car. 1363) .

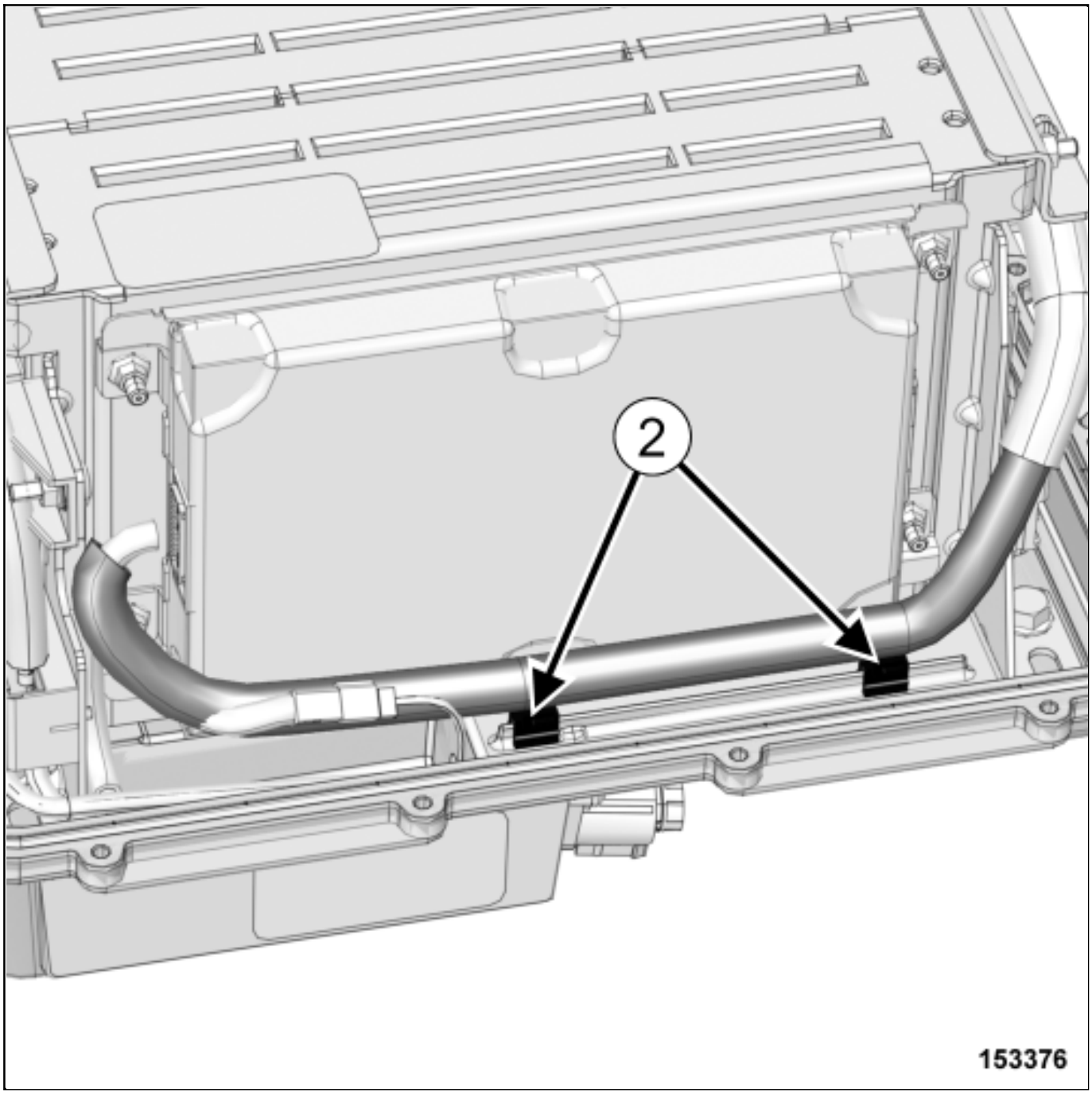

- Unclip the traction battery low voltage wiring clips(2) from the traction battery lower cover using the toolSet of trim removal levers.(Car. 1363) .

- Move the traction battery low voltage wiring in front of the computer.

- Remove (see 19E, Traction battery, Traction battery module stack assembly : Exploded view) :
  -

- the traction battery computer lower nuts using an insulated magnetic H10 socket,
- the traction battery computer upper nuts using an insulated magnetic H10 socket,
- the traction battery computer.

REFITTING

1. REFITTING OPERATION

CAUTION

In case of replacement, note and report the identification number of the computer.

- Refit (see 19E, Traction battery, Traction battery module stack assembly : Exploded view) :
  - the traction battery computer,
  - the traction battery computer nuts using an insulated magnetic H10 socket.
- Torque tighten the traction battery computer nuts using an insulated magnetic H10 socket(see 19E, Traction battery, Traction battery module stack assembly : Exploded view) .

Note:

Tighten the nuts in a criss-cross pattern.

- Mark always nuts with a paint markerof a color diffrent from the original.
- Fit the traction battery low voltage wiring in front of the computer.
-

Clip the traction battery low voltage wiring clips on the traction battery lower cover.

- Connect the traction battery computer plugs.

- Proceed in the reverse order to removal.

- Apply the After repair procedure using the Diagnostic tool(see **Diagnostic tool : Use**) :

-Computer concerned by the After repair procedure:

■

"Traction battery computer" .

Repair-14x02x01x11-01x37-1-3-1.xml

XSL version : 3.02 du 22/07/11

TRACTION BATTERY HOUSING ASSEMBLY : EXPLODED VIEW

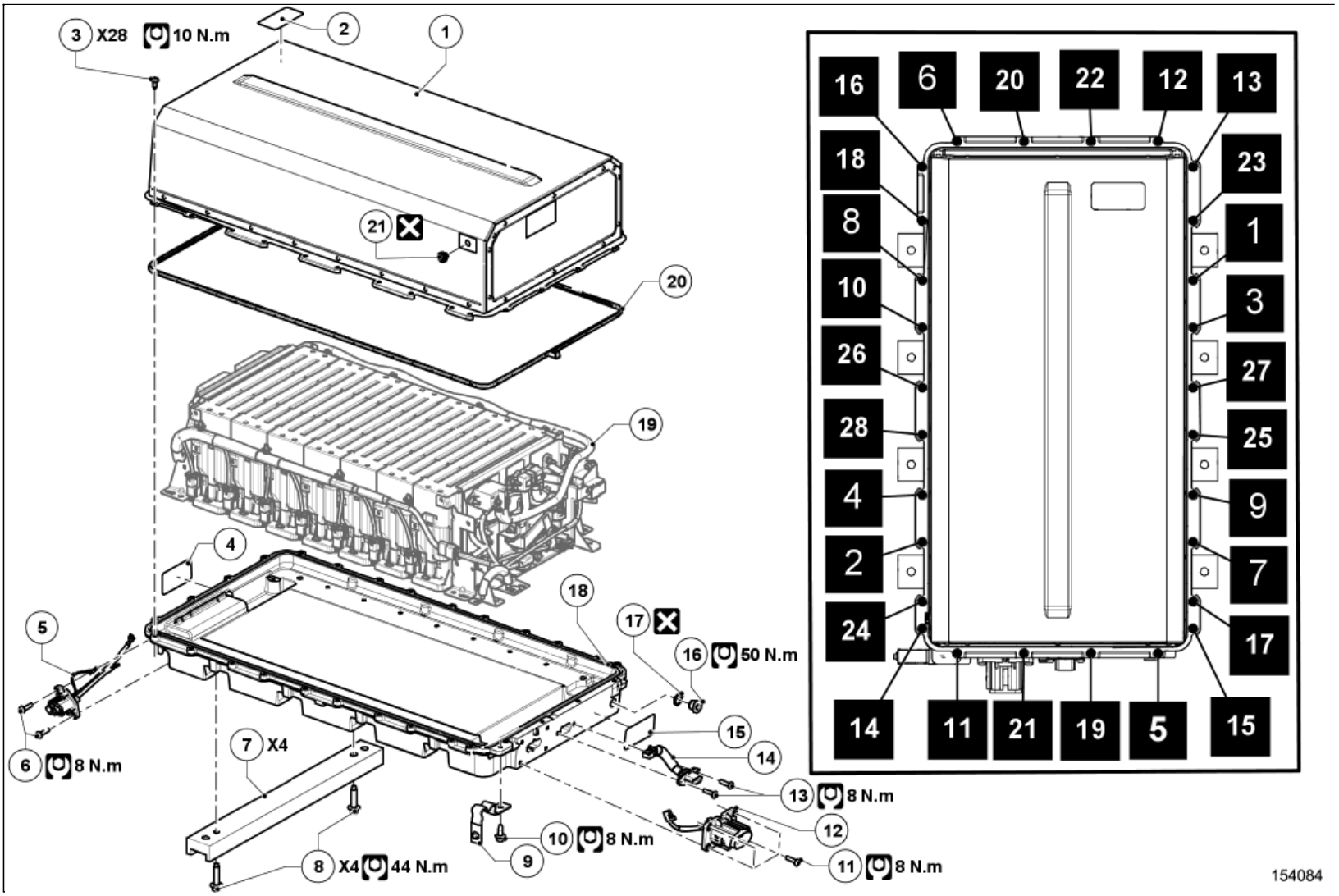

Illustration key: Description Legend .

Marks	Designations	Informations
1	traction battery upper cover	(see 19E, Traction battery, Traction battery upper cover : Removal - Refitting)
2	traction battery safety label	
3	traction battery upper cover screw	
4	traction battery safety label	
5	high voltage connector between charger and traction battery	(see 19E, Traction battery, High voltage connector between charger and traction battery : Removal - Refitting)
6	high voltage connector between charger and traction battery screw	
7	traction battery crossmember	
8	traction battery crossmember screw	
9	traction battery earth strap	
10	traction battery earth strap screw	
11	high voltage connector between converter and traction battery screw	
12	high voltage connector between converter and traction battery	(see 19E, Traction battery, High voltage connector between converter and traction battery : Removal - Refitting)
13	traction battery low voltage connector screw	
14	traction battery low voltage connector	(see 19E, Traction battery, Traction battery low voltage connector : Removal - Refitting)
15	traction battery safety label	
16	air leak check screw	Only for traction battery equipped with an air leak check screw
17	air leak check screw seal	Only for traction battery equipped with an air leak check screw
18	traction battery lower cover	(see 19E, Traction battery, Traction battery lower cover : Removal - Refitting)
19	traction battery module stack	
20	seal between lower and upper covers of the traction battery	
21	traction battery breather valve	

TRACTION BATTERY INTERNAL FUSES : REMOVAL - REFITTING

Note, one or more warnings are present in this procedure

Special tooling required	
Set of trim removal levers.	Car. 1363

Locations and specifications (tightening torques, parts always to be replaced, etc.)(see 19E, Traction battery, Traction battery module stack assembly : Exploded view) .

WARNING

To avoid all risk of damage to the systems, apply the safety and cleanliness instructions and operation recommendations before carrying out any repair:

(see 19E, Traction battery, Traction battery : Precautions for the repair) ,

Vehicle: Precautions for the repair .

WARNING

DANGER: HIGH VOLTAGE VEHICLE.

Risks of serious burns or electric shock that may prove fatal.

Before carrying out any work on the vehicle, it is essential that you adhere to the instructions regarding vehicle voltage cut-off. This work must be carried out by an employee who is qualified and authorized to work on a high-voltage onboard network.

REMOVAL

1. REMOVAL PREPARATION OPERATION

Remove the traction battery upper cover(see 19E, Traction battery, Traction battery housing assembly :

Exploded view) .

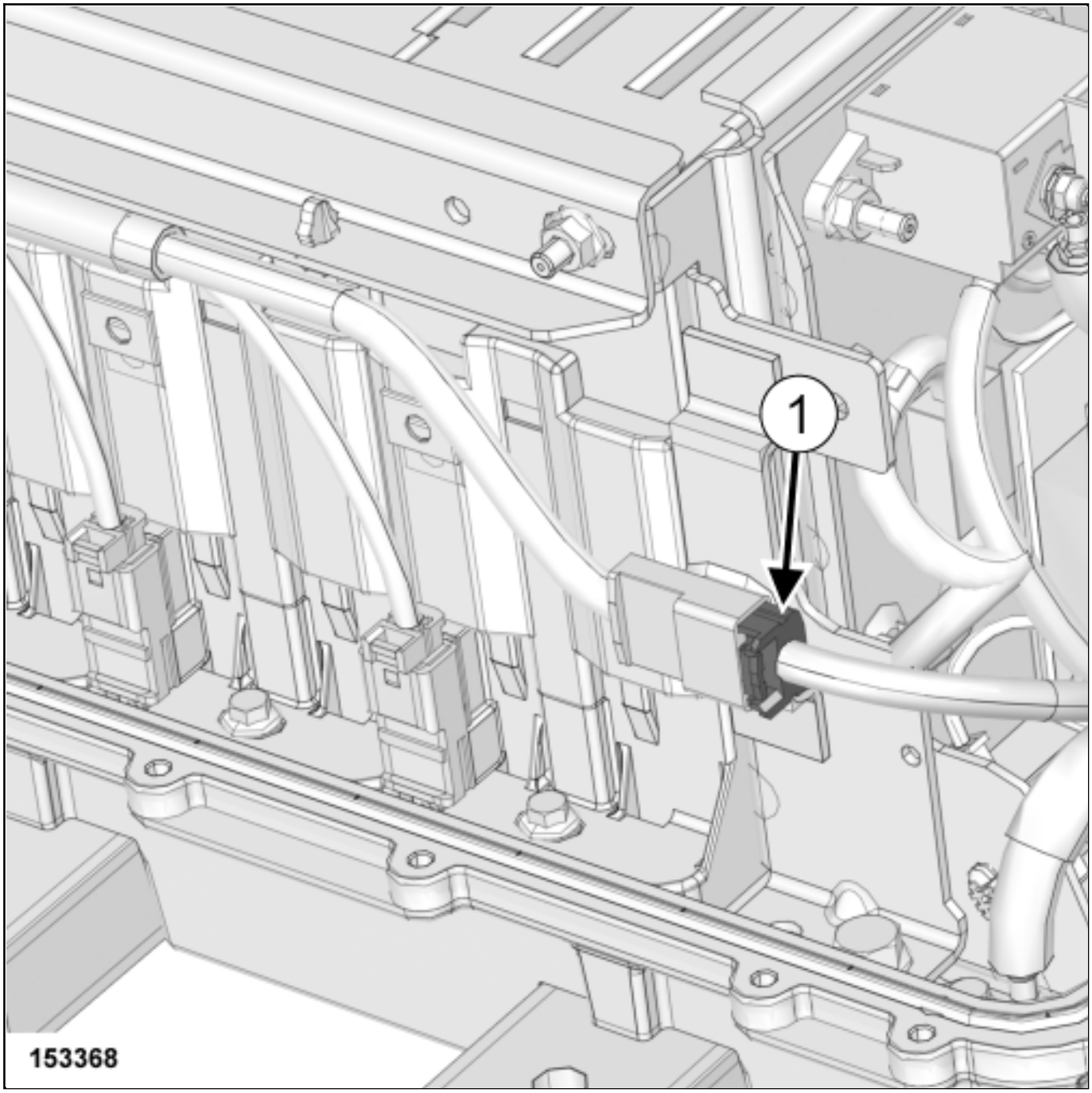

❑

Disconnect the traction battery internal low voltage wiring plug(1) using the toolSet of trim removal levers. (Car. 1363) .

2. REMOVE THE TRACTION BATTERY CHARGE FUSE

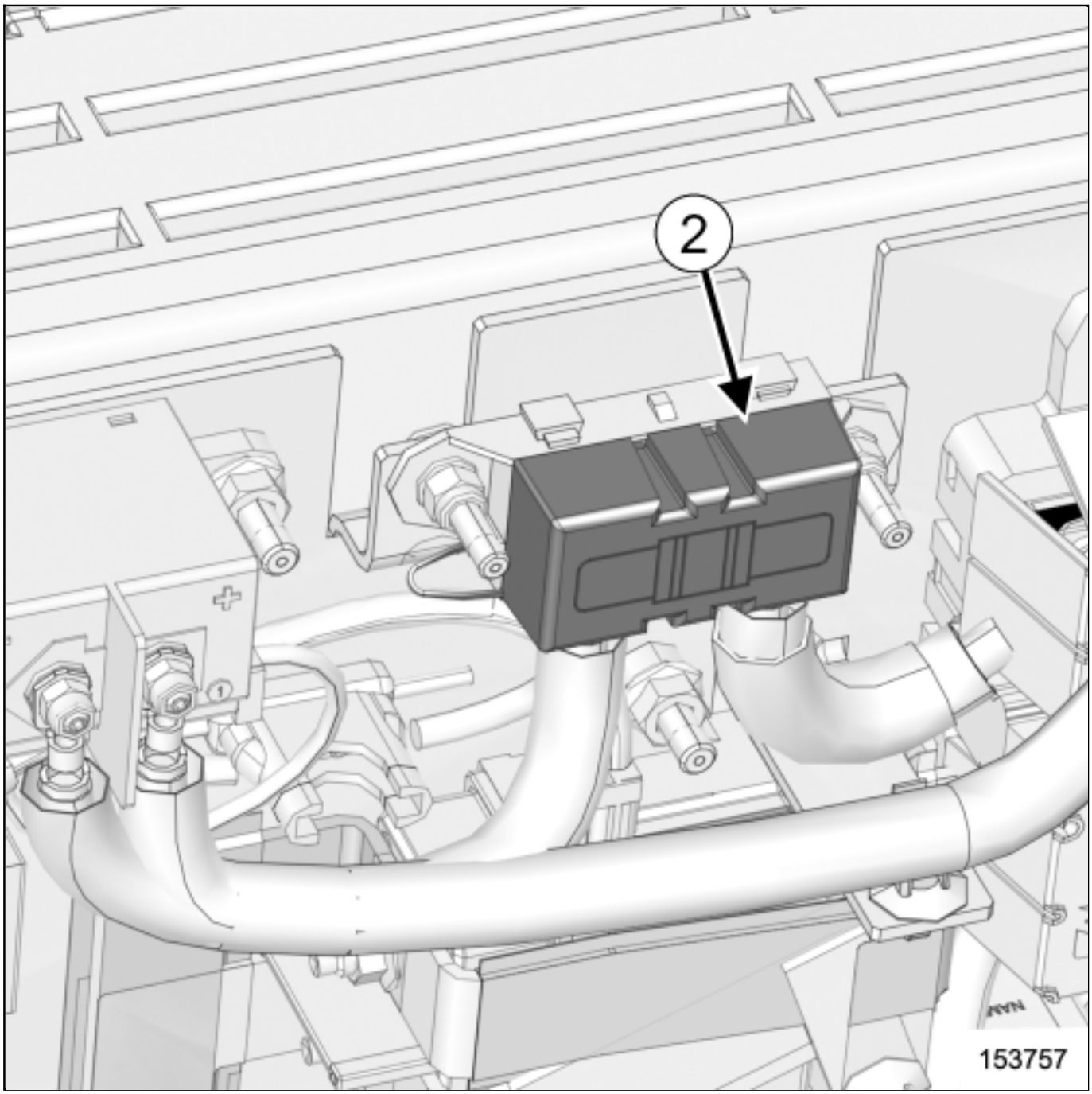

- Unclip the protective cover(2) from the charge fuse.

- Remove the left electric connection nut from the charge fuse using an insulated magnetic H8 socket (see 19E, Traction battery, Traction battery module stack assembly : Exploded view) .

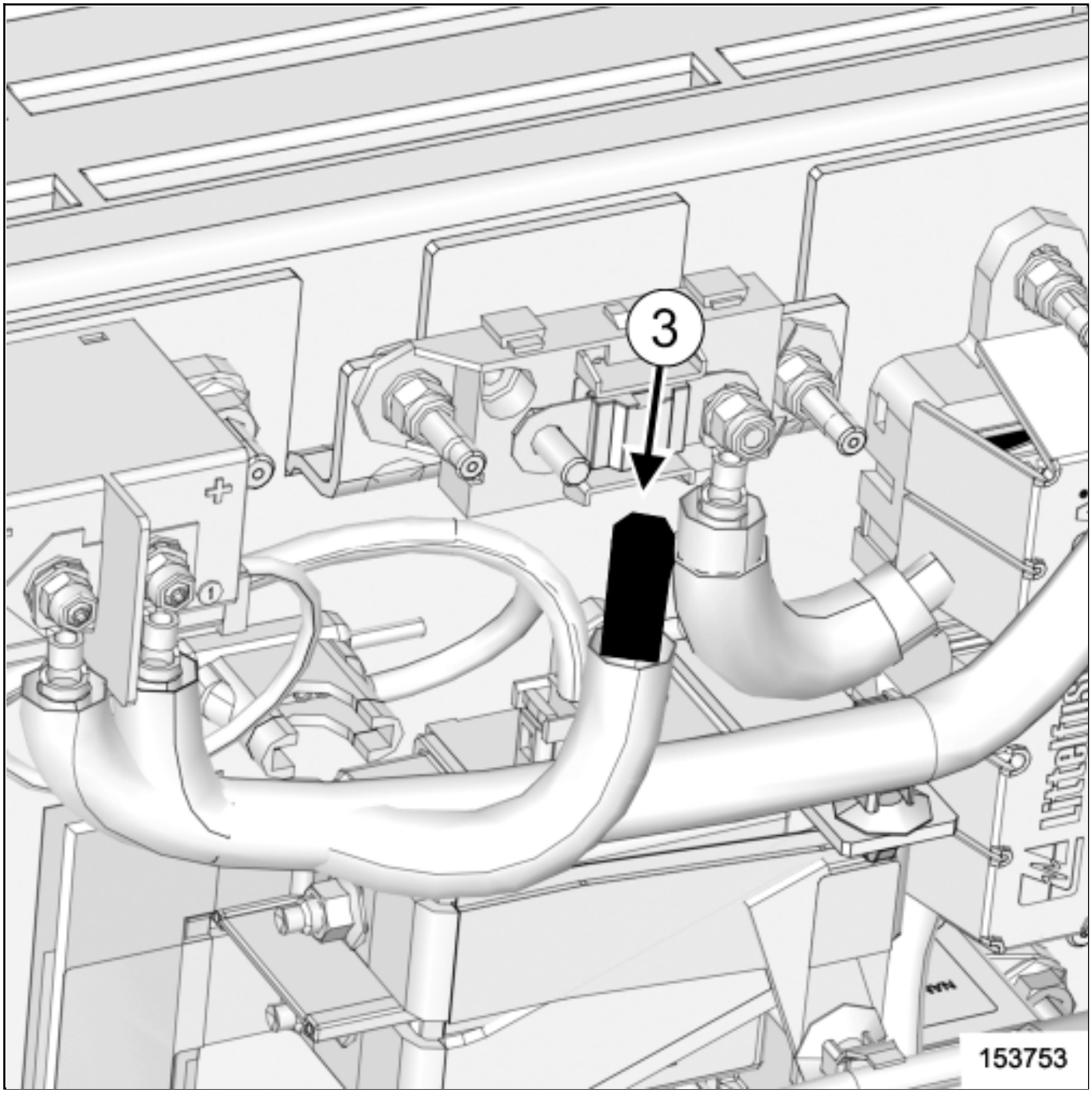

- Move the left wire from the charge fuse.

- Insulate the left wire(3) .

- Remove the right electric connection nut from the charge fuse using an insulated magnetic H8 socket (see 19E, Traction battery, Traction battery module stack assembly : Exploded view) .

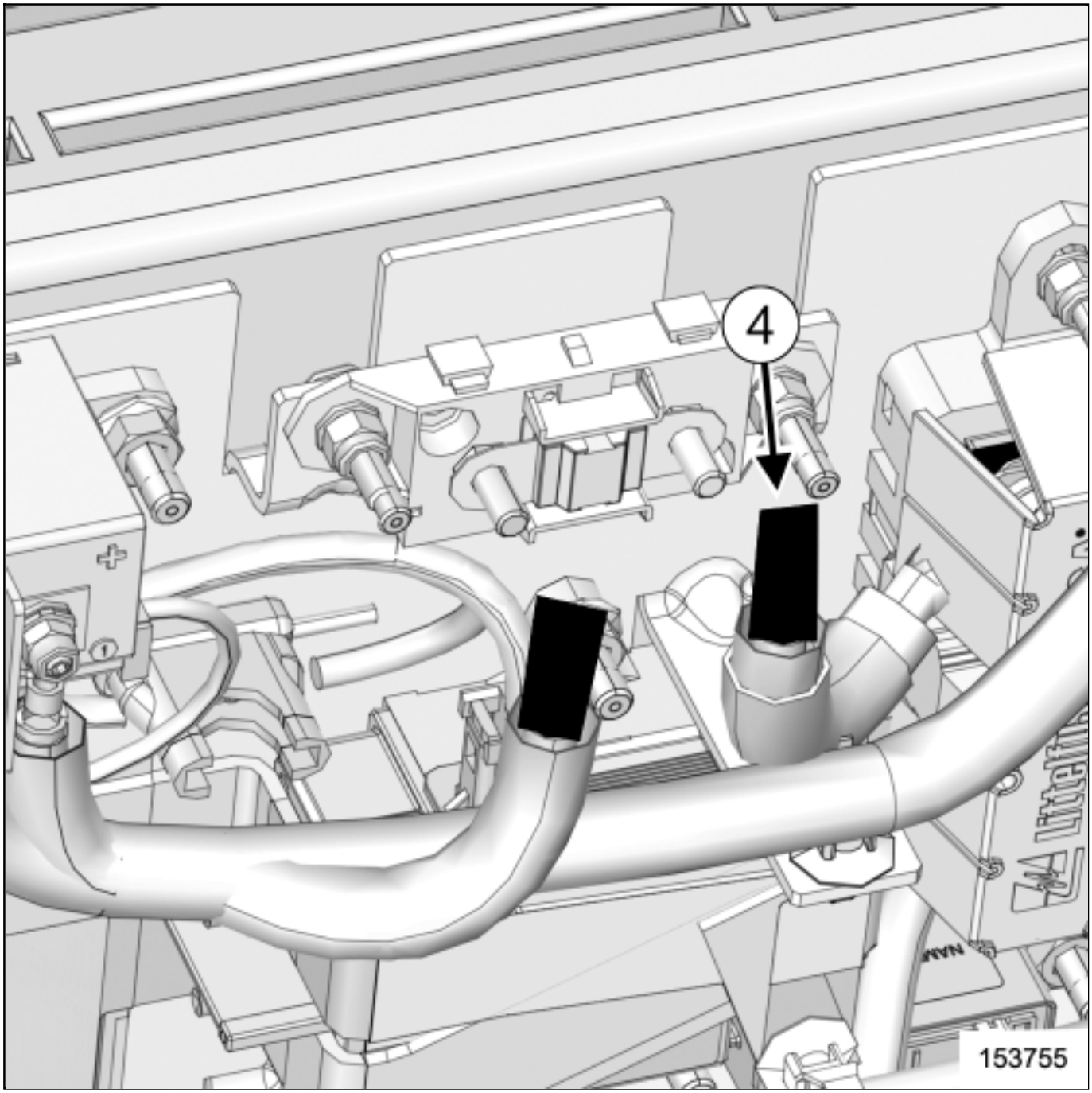

- Move the right wire from the charge fuse.

- Insulate the right wire(4) .

- Remove the traction battery charge fuse(see 19E, Traction battery, Traction battery module stack assembly : Exploded view) .

-

Parts always to be replaced:

- the charge relay (see 19E, Traction battery, Traction battery module stack assembly : Exploded view),
- the left electric connection nut from the charge fuse,
- the right electric connection nut from the charge fuse.

3. REMOVE THE TRACTION BATTERY MAIN FUSE

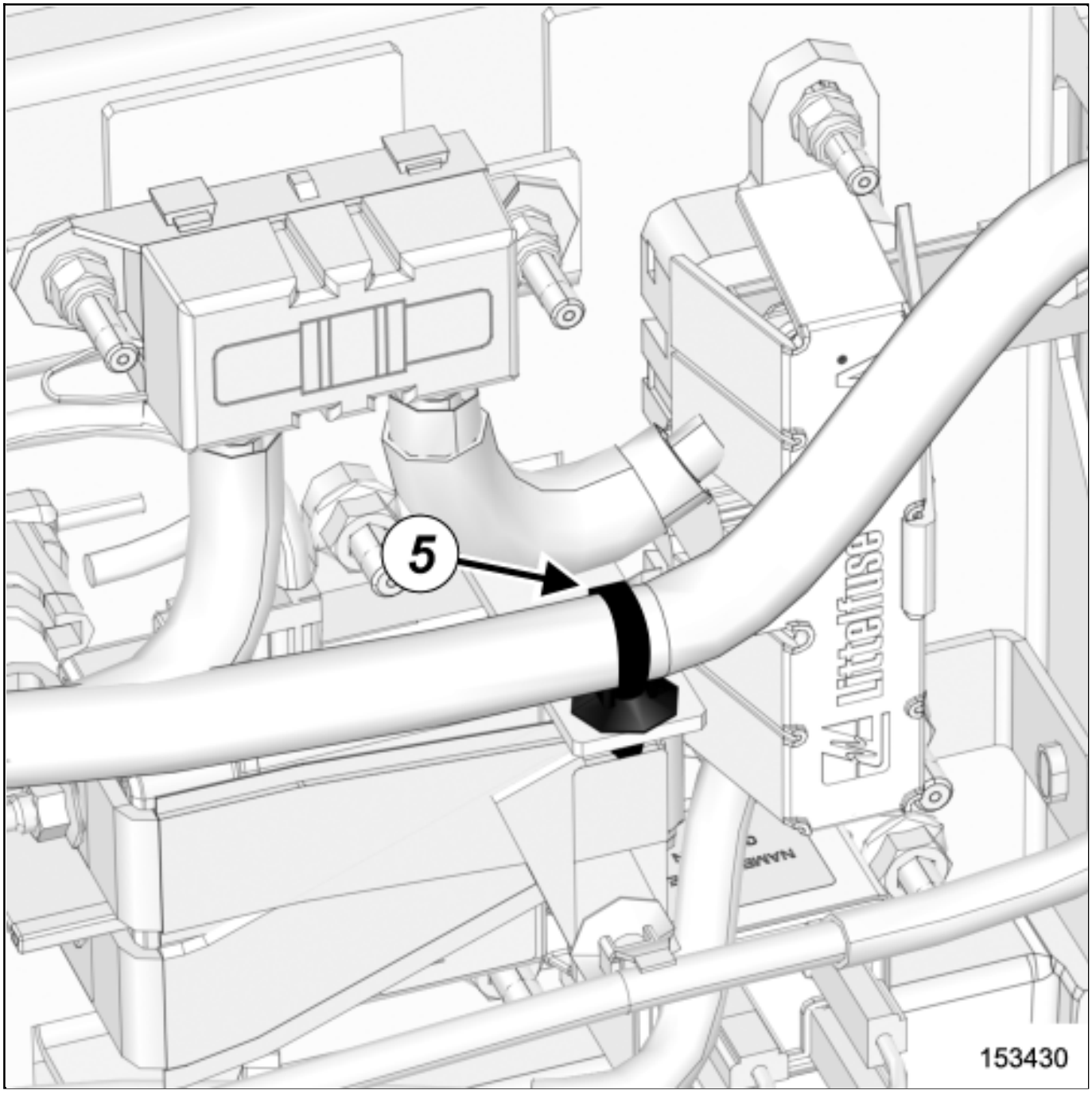

- Unclip the clip(5) from the traction battery low voltage wiring using an insulated needle nose pliers.

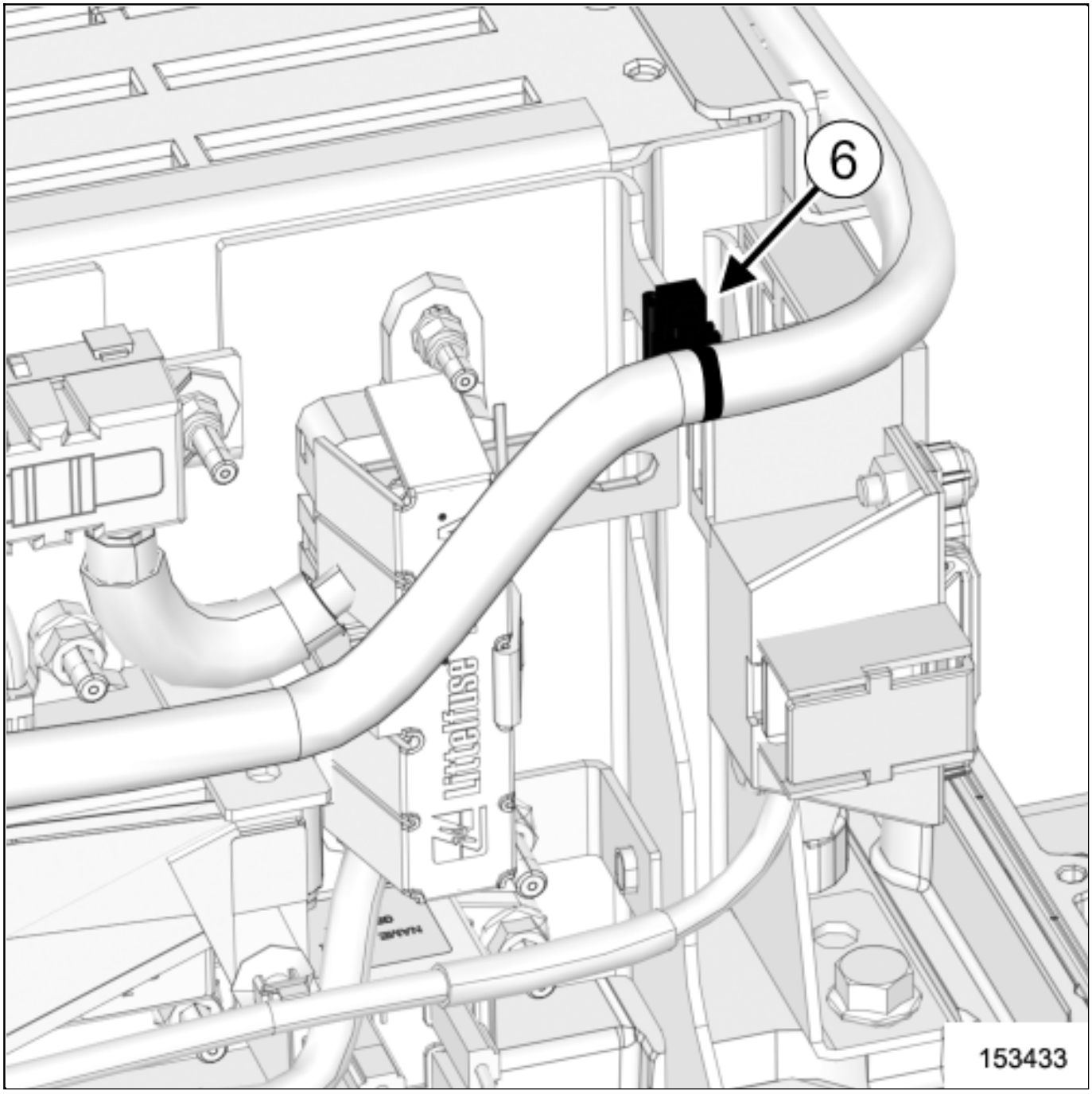

- Unclip the clip(6) from the traction battery low voltage wiring using the toollSet of trim removal levers. (Car. 1363) .

- Move the wiring.

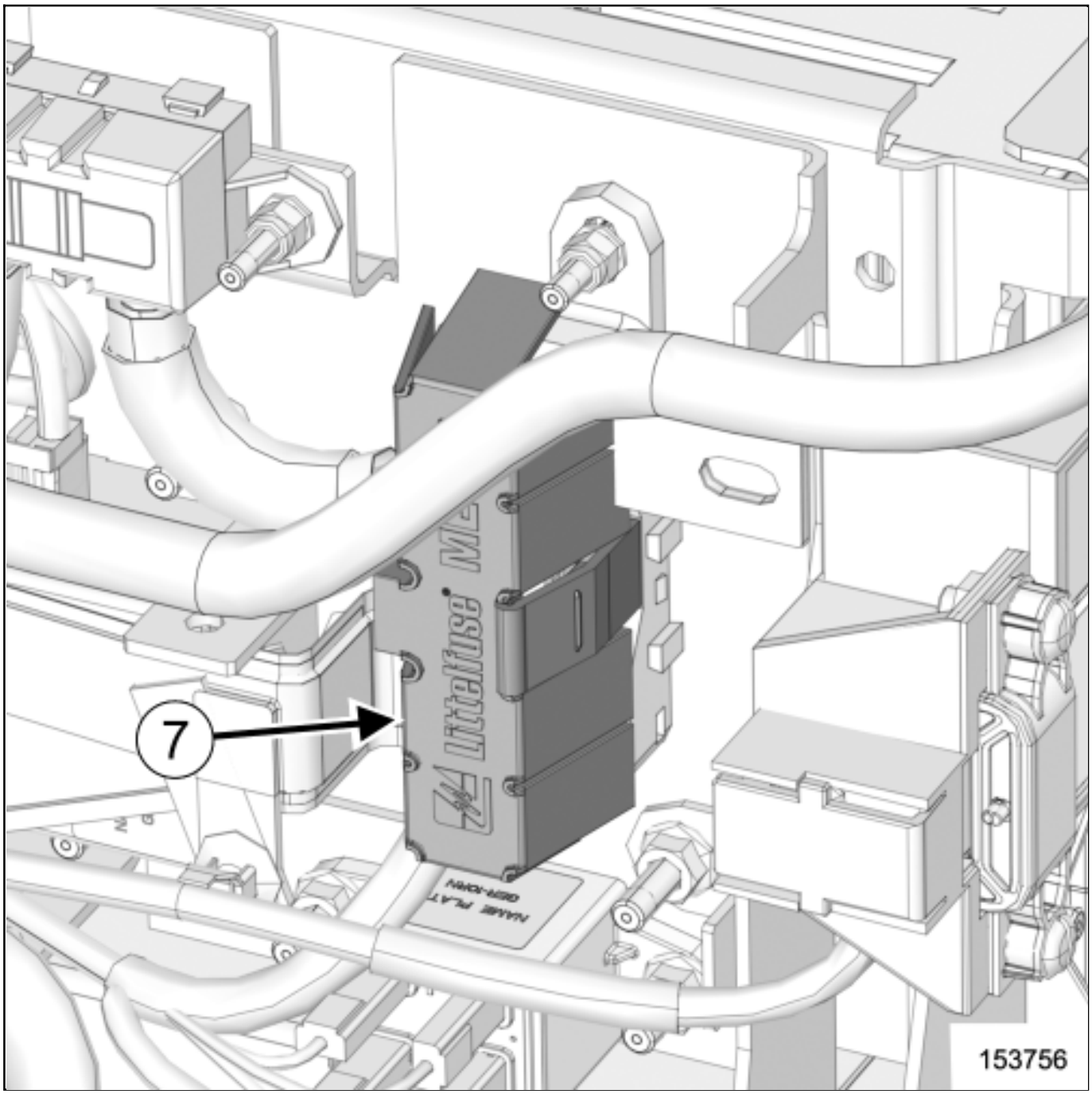

-

Unclip the protective cover(7) from the main fuse.

-

Remove the lower electric connection nut from the main fuse using an insulated magnetic H13 socket (see 19E, Traction battery, Traction battery module stack assembly : Exploded view) .

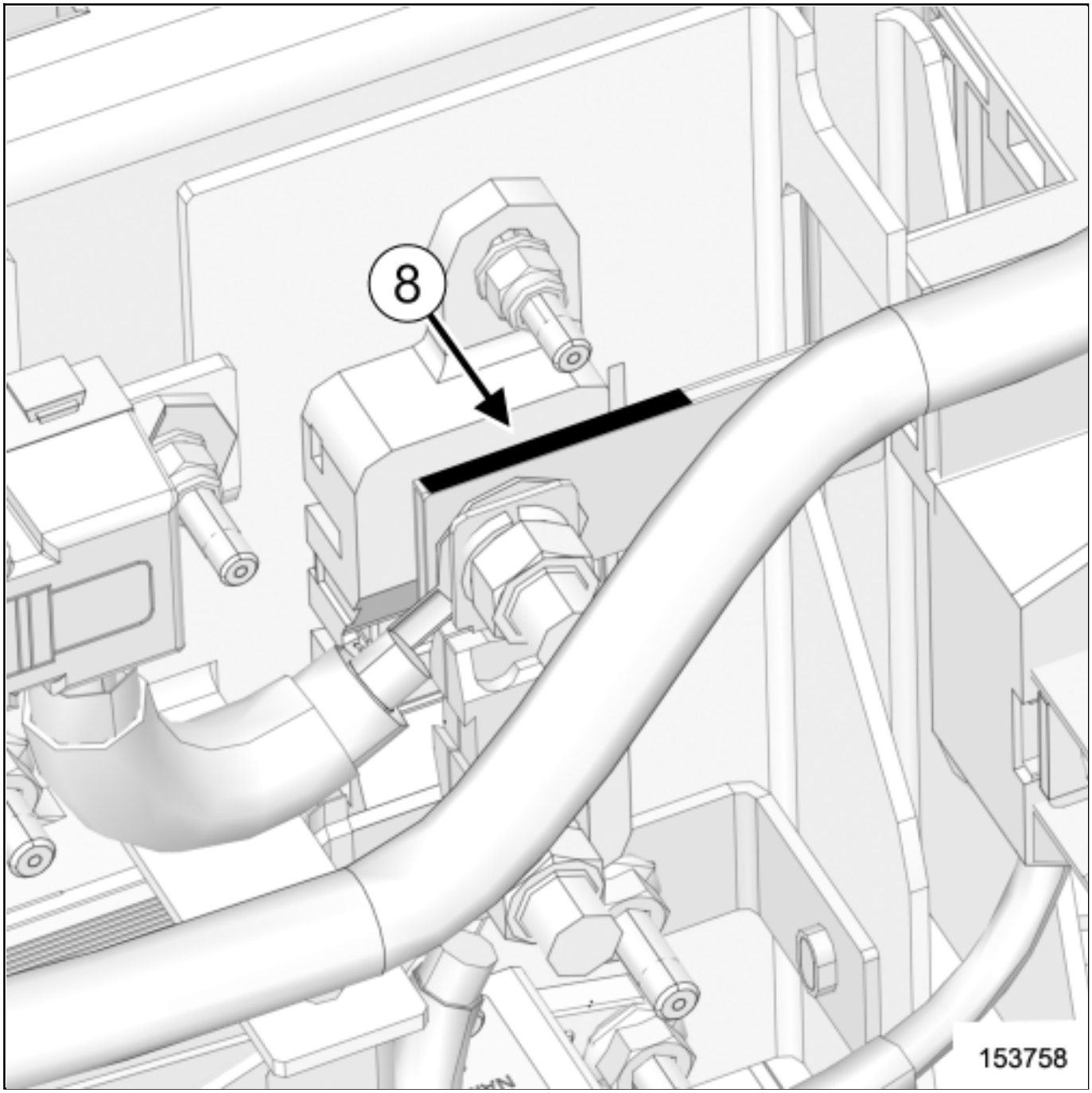

Make a mark(8) with a paint markeron the jumper connection.

Remove (see 19E, Traction battery, Traction battery module stack assembly : Exploded view) :

- the upper electric connection nut from the main fuse using an insulated magnetic H13 socket,
- the traction battery main fuse using the toolSet of trim removal levers.(Car. 1363) .

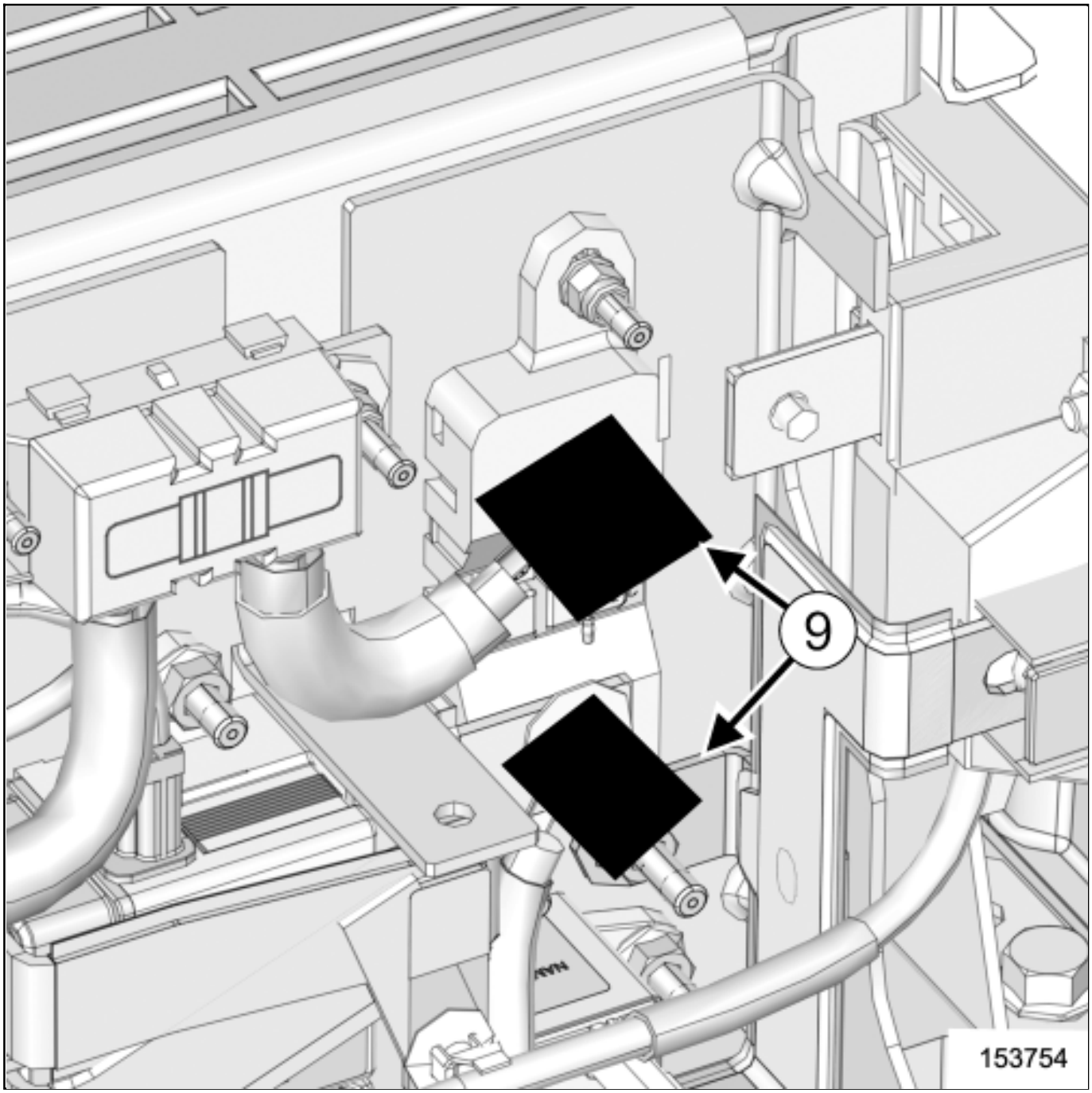

Insulate the upper and lower(9) terminal from the main fuse.

Parts always to be replaced:

- the main relay(see 19E, Traction battery, Traction battery module stack assembly : Exploded view) ,
- the upper electric connection nut from the main fuse,

the lower electric connection nut from the main fuse.

4. REMOVE THE TRACTION BATTERY PRECHARGE FUSE

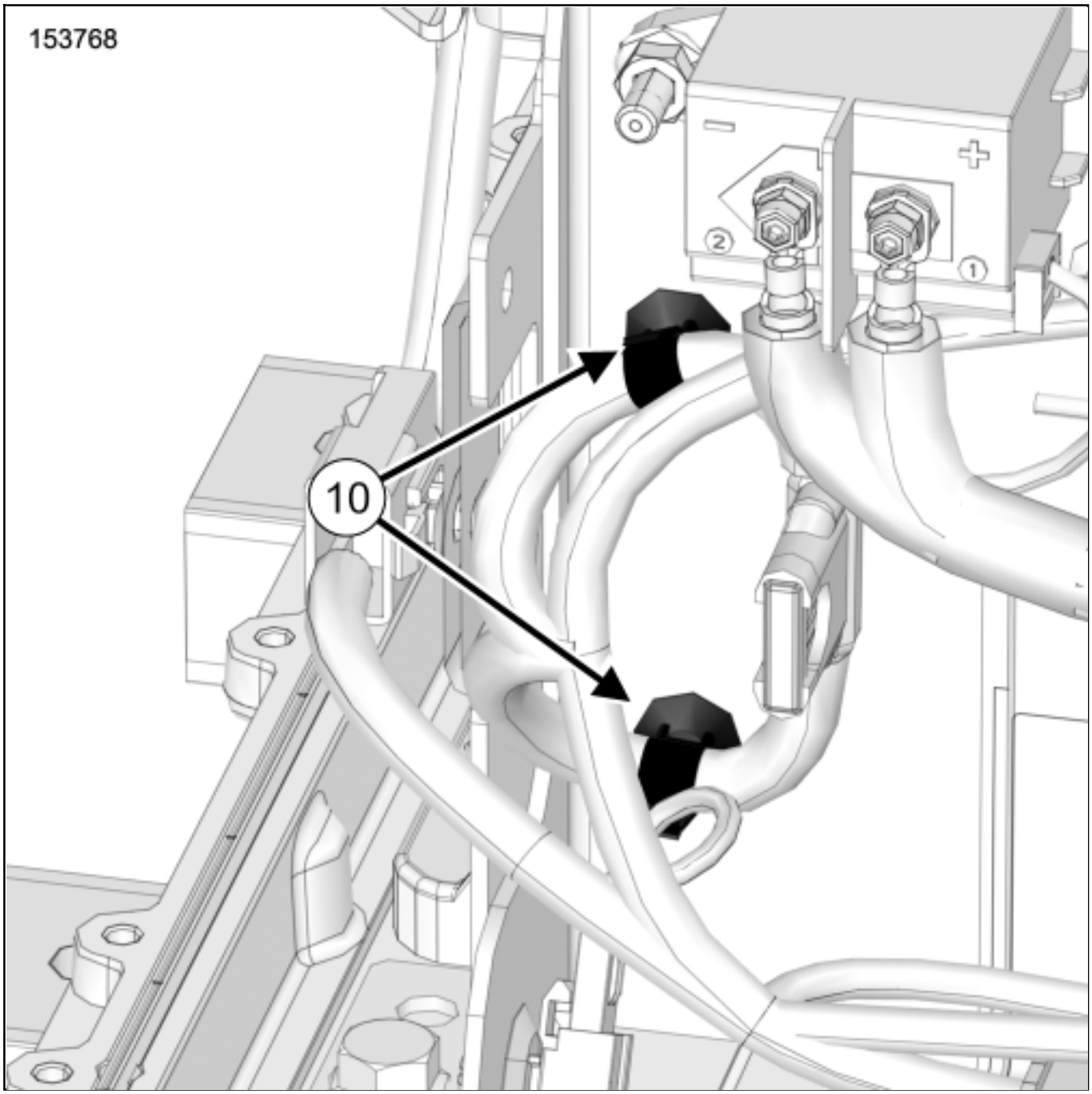

❑

Unclip the clips(10) from the traction battery low voltage wiring using the toolSet of trim removal levers. (Car. 1363) .

❑

Remove the traction battery precharge fuse(see 19E, Traction battery, Traction battery module stack

assembly : Exploded view) .

Parts always to be replaced:

- the precharge relay(see 19E, Traction battery, Traction battery module stack assembly : Exploded view) .

5. REMOVE THE TRACTION BATTERY DIODE

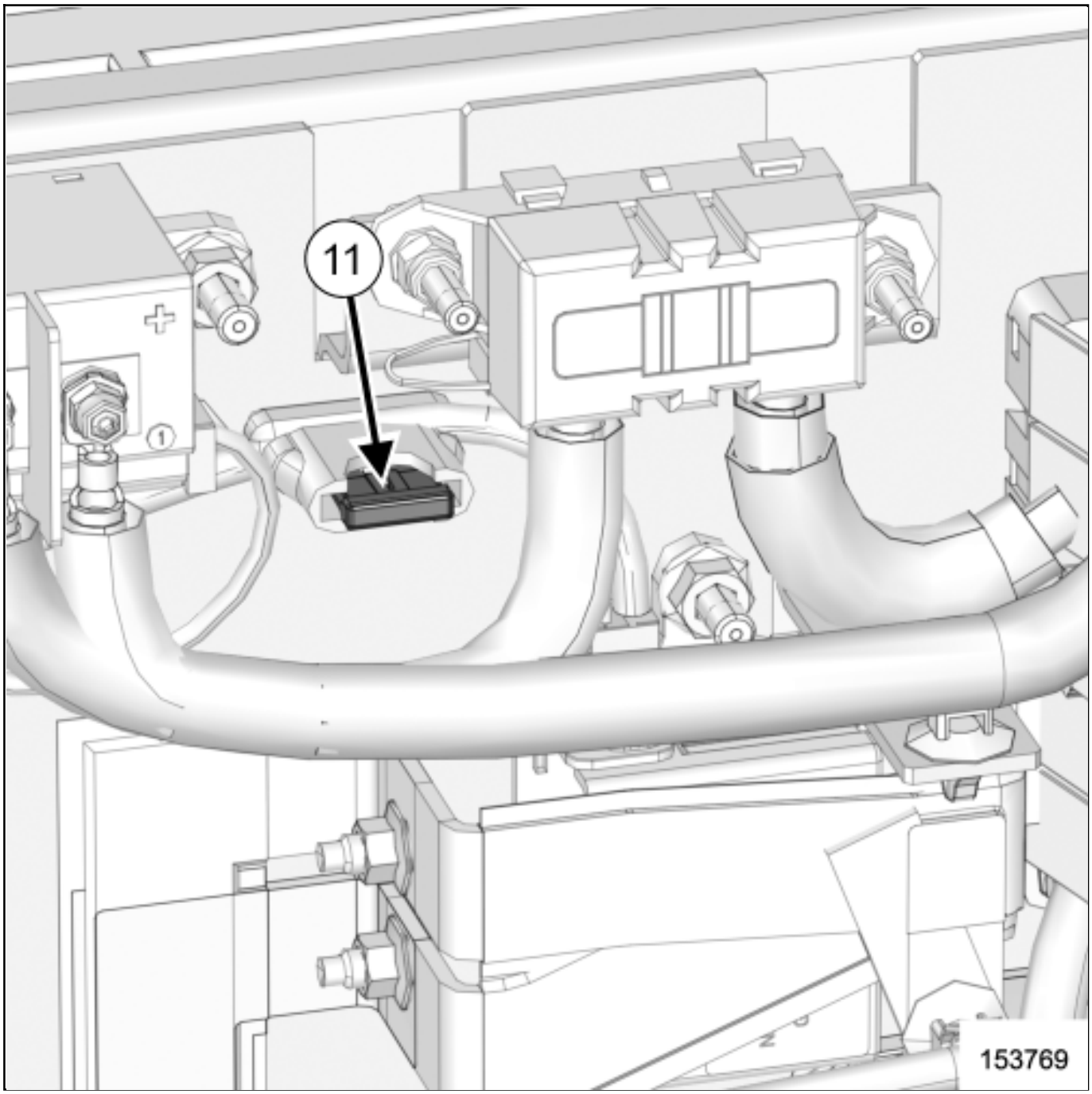

Unclip the protective cover from the diode.

❑

Remove the traction battery diode(11) (see 19E, Traction battery, Traction battery module stack assembly : Exploded view) .

REFITTING

1. REFIT THE TRACTION BATTERY CHARGE FUSE

❑

Refit the traction battery charge fuse(see 19E, Traction battery, Traction battery module stack assembly : Exploded view) .

❑

Remove the insulation from the right wire.

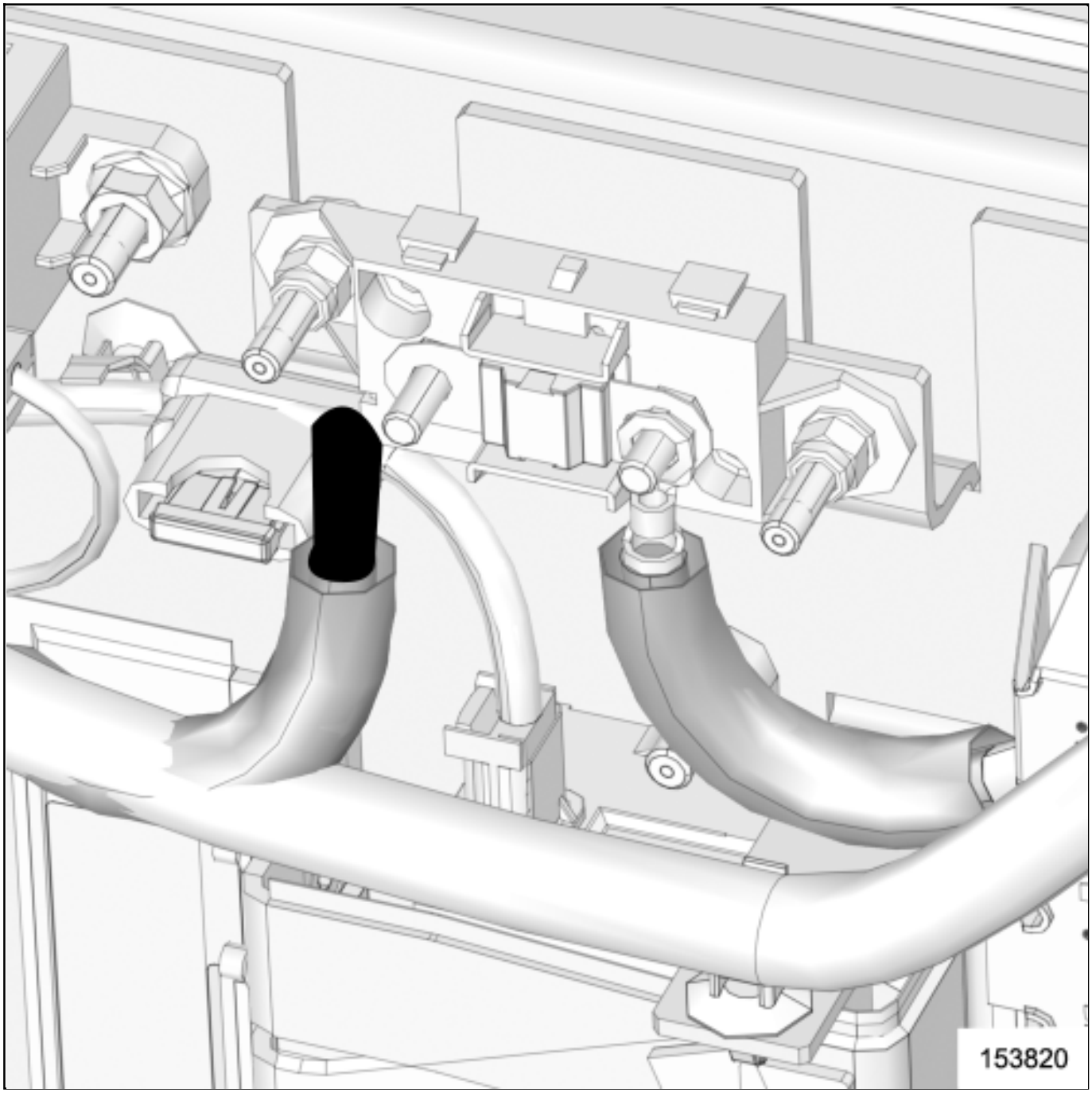

Fit the right wire on the charge fuse.

Note:

Pay attention to the path of the wire.

Refit the new right electric connection nut on the charge fuse using an insulated magnetic H8

socket (see 19E, Traction battery, Traction battery module stack assembly : Exploded view) .

❑

Torque tighten the right electric connection nut on the charge fuse using an insulated magnetic H8 socket(see 19E, Traction battery, Traction battery module stack assembly : Exploded view) .

❑

Mark always the nut with a paint markerof a color different from the original.

❑

Remove the insulation from the left wire

❑

Fit the left wire on the charge fuse.

❑

Refit the new left electric connection nut on the charge fuse using an insulated magnetic H8 socket (see 19E, Traction battery, Traction battery module stack assembly : Exploded view) .

❑

Torque tighten the left electric connection nut on the charge fuse using an insulated magnetic H8 socket (see 19E, Traction battery, Traction battery module stack assembly : Exploded view) .

❑

Mark always the nut with a paint markerof a color different from the original.

❑

Clip the protective cover on the charge fuse.

2. REFIT THE TRACTION BATTERY MAIN FUSE

❑

Remove the insulation from the upper and lower terminals on the main fuse.

❑

Refit the traction battery main fuse(see 19E, Traction battery, Traction battery module stack assembly : Exploded view) .

Note:

Respect the initial assembly:

4- nut

3- fuse

2- wire

1- bus bar

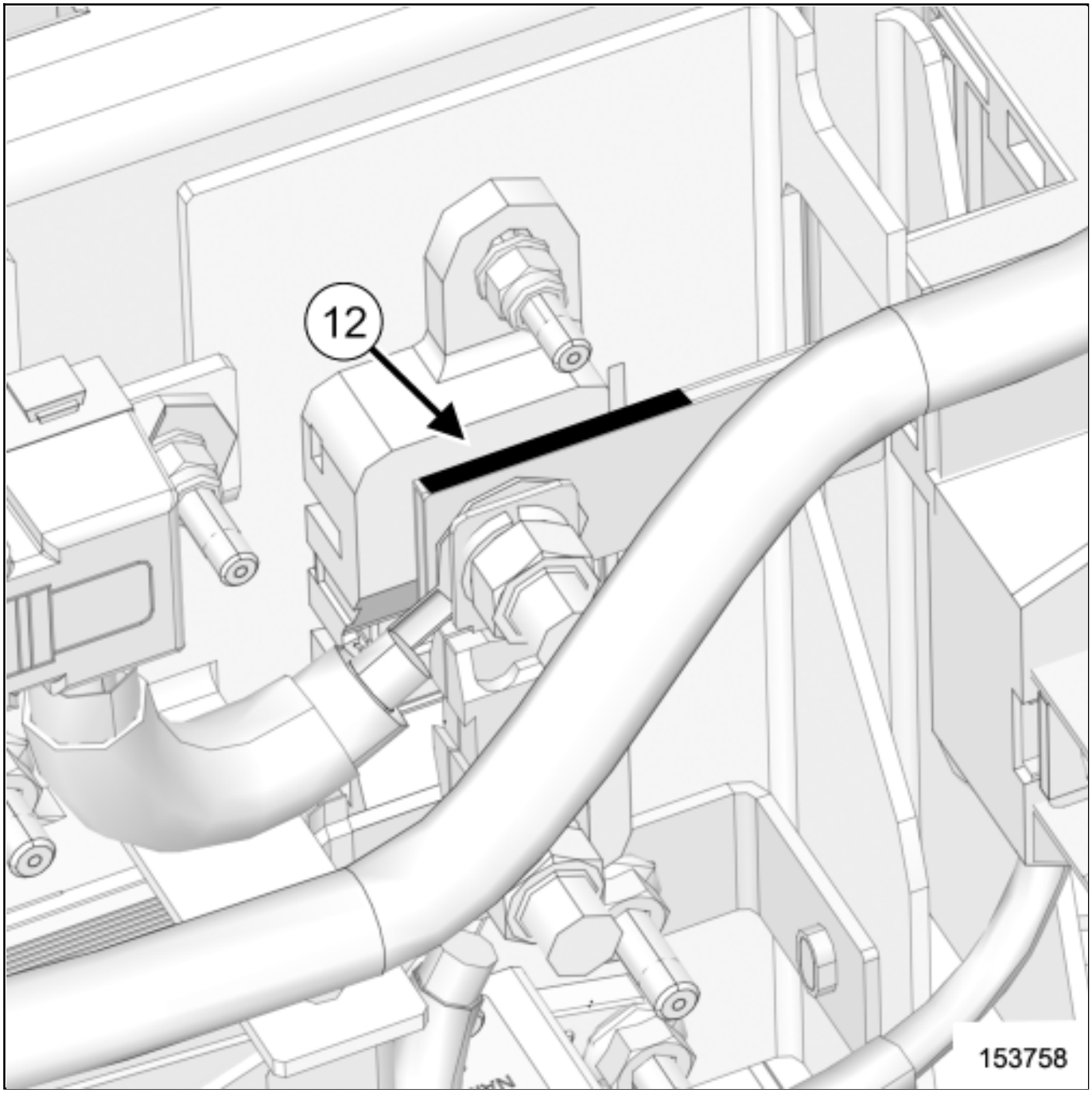

❑

Refit the new upper electric connection nut on the main fuse using an insulated magnetic H13 socket (see 19E, Traction battery, Traction battery module stack assembly : Exploded view) .

Note:

Pay attention to the position of the jumper connection(12) .

Respect the initial assembly:

4- nut

3- fuse

2- wire

1- bus bar

❑

Refit the new lower electric connection nut on the main fuse using an insulated magnetic H13 socket (see 19E, Traction battery, Traction battery module stack assembly : Exploded view) .

Note:

Respect the initial assembly:

4- nut

3- fuse

2- wire

1- bus bar

❑

Torque tighten the upper electric connection nut on the main fuse using an insulated magnetic H13 socket(see 19E, Traction battery, Traction battery module stack assembly : Exploded view) .

❑

Mark always the nut with a paint markerof a color different from the original.

❑

Torque tighten the lower electric connection nut on the main fuse using an insulated magnetic H13 socket(see 19E, Traction battery, Traction battery module stack assembly : Exploded view) .

❑

Mark always the nut with a paint markerof a color different from the original.

❑

Clip:

- the protective cover on the main fuse,
- the clips of the traction battery low voltage wiring.

3. REFIT THE TRACTION BATTERY PRECHARGE FUSE

❑

Refit the traction battery precharge fuse(see 19E, Traction battery, Traction battery module stack assembly : Exploded view) .

❑

Clip the clips of the traction battery low voltage wiring.

4. REFIT THE TRACTION BATTERY DIODE

❑

Refit the traction battery diode(see 19E, Traction battery, Traction battery module stack assembly : Exploded view) .

❑

Clip the protective cover on the diode.

5. FINAL OPERATION

❑

Proceed in the reverse order to removal.

XSL version : 3.02 du 22/07/11

TRACTION BATTERY INTERNAL JUNCTION BOX: REMOVAL - REFITTING

Note, one or more warnings are present in this procedure

Special tooling required	
Set of trim removal levers.	Car. 1363

Locations and specifications (tightening torques, parts always to be replaced, etc.)(see 19E, Traction battery, Traction battery module stack assembly : Exploded view) .

WARNING

To avoid all risk of damage to the systems, apply the safety and cleanliness instructions and operation recommendations before carrying out any repair:

(see 19E, Traction battery, Traction battery : Precautions for the repair) ,

Vehicle: Precautions for the repair .

WARNING

DANGER: HIGH VOLTAGE VEHICLE.

Risks of serious burns or electric shock that may prove fatal.

Before carrying out any work on the vehicle, it is essential that you adhere to the instructions regarding vehicle voltage cut-off. This work must be carried out by an employee who is qualified and authorized to work on a high-voltage onboard network.

REMOVAL

1. REMOVAL PREPARATION OPERATION

Remove:

the traction battery upper cover(see 19E, Traction battery, Traction battery housing assembly : Exploded view) ,

the traction battery module semi-rigid connection plate(see 19E, Traction battery, Traction battery module stack assembly : Exploded view) .

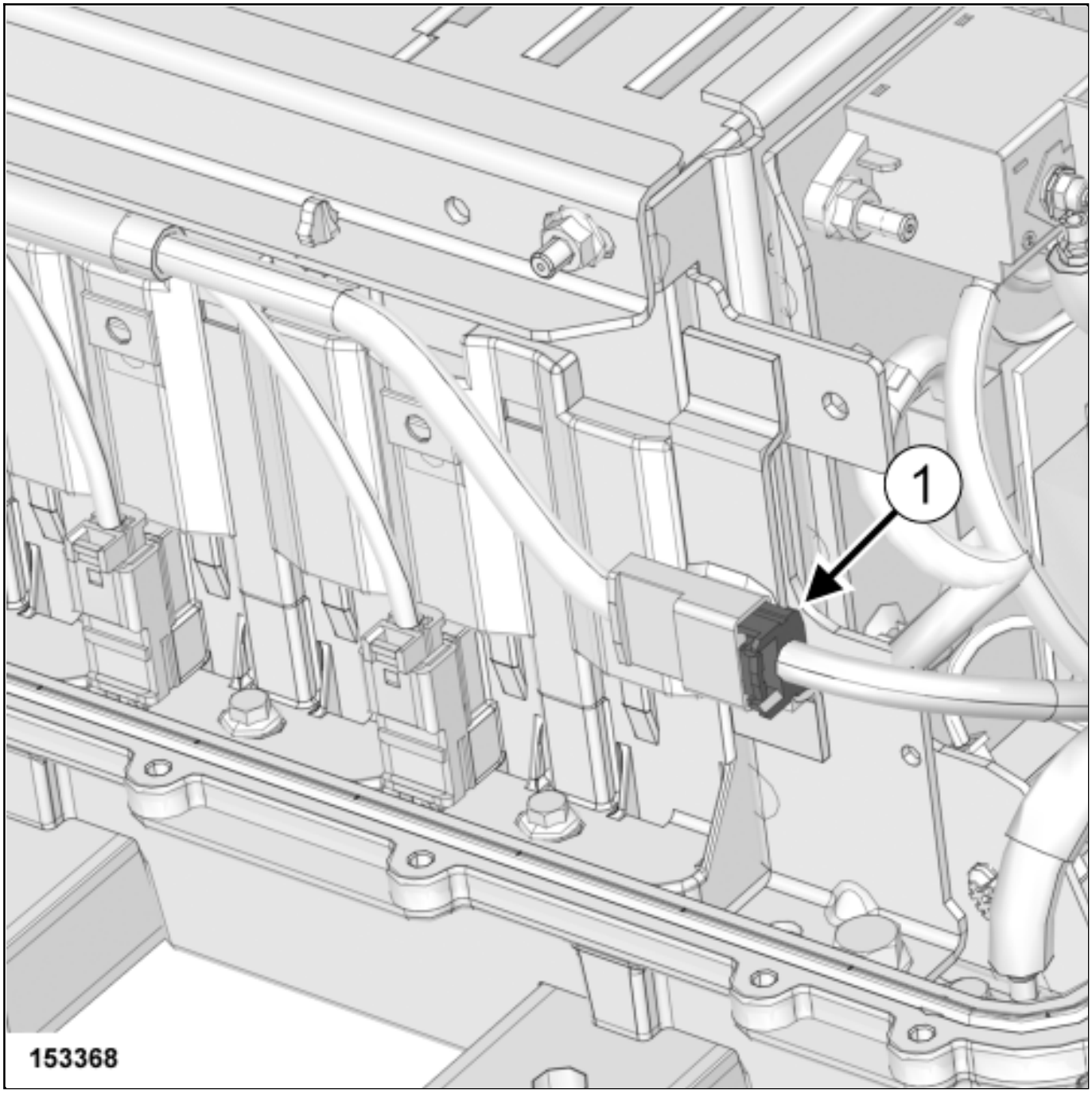

Disconnect the traction battery internal low voltage wiring plug(1) using the toolSet of trim removal levers. (Car. 1363) .

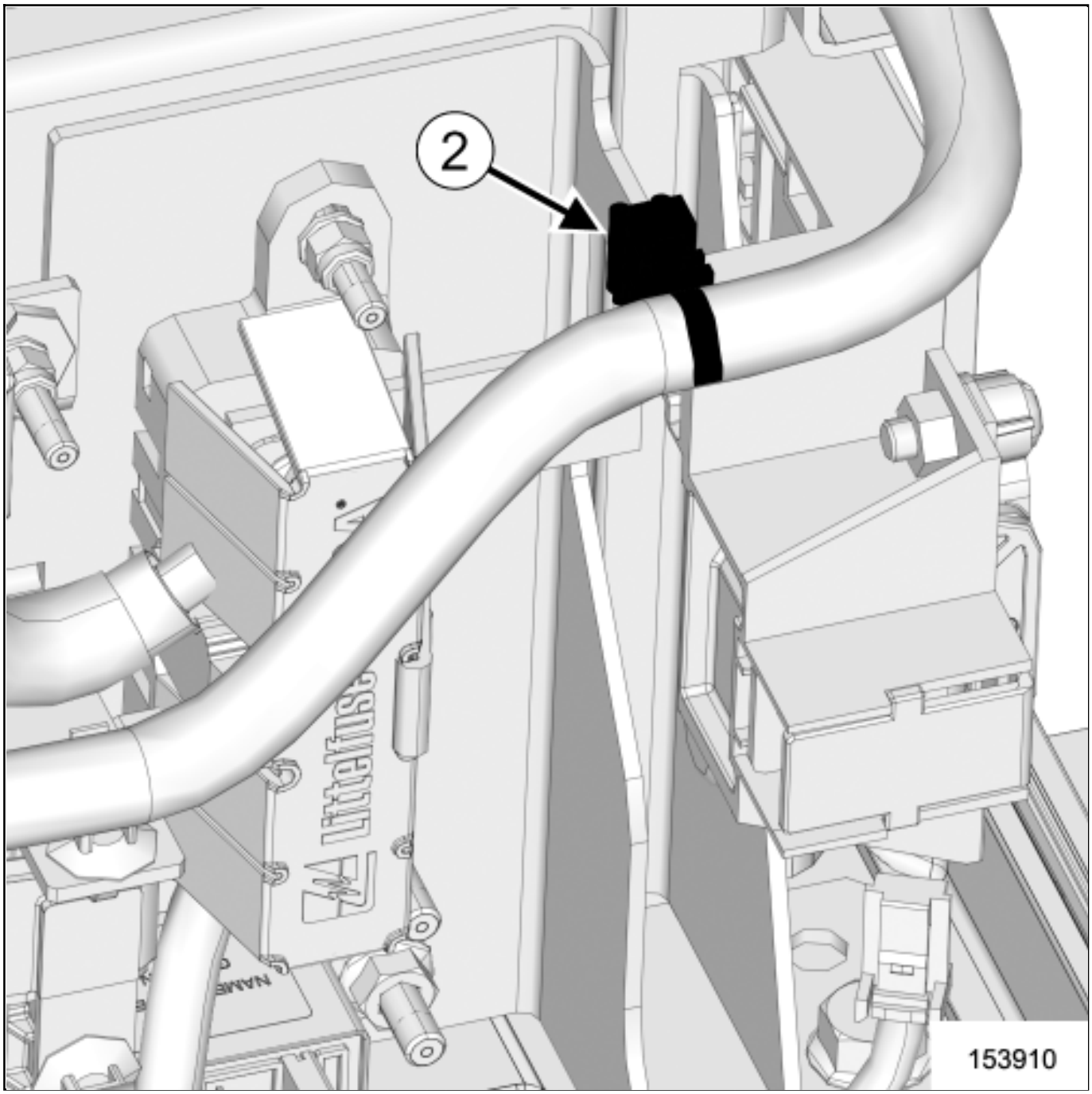

Unclip the clip(2) from the traction battery internal low voltage wiring using the toolSet of trim removal levers. (Car. 1363) .

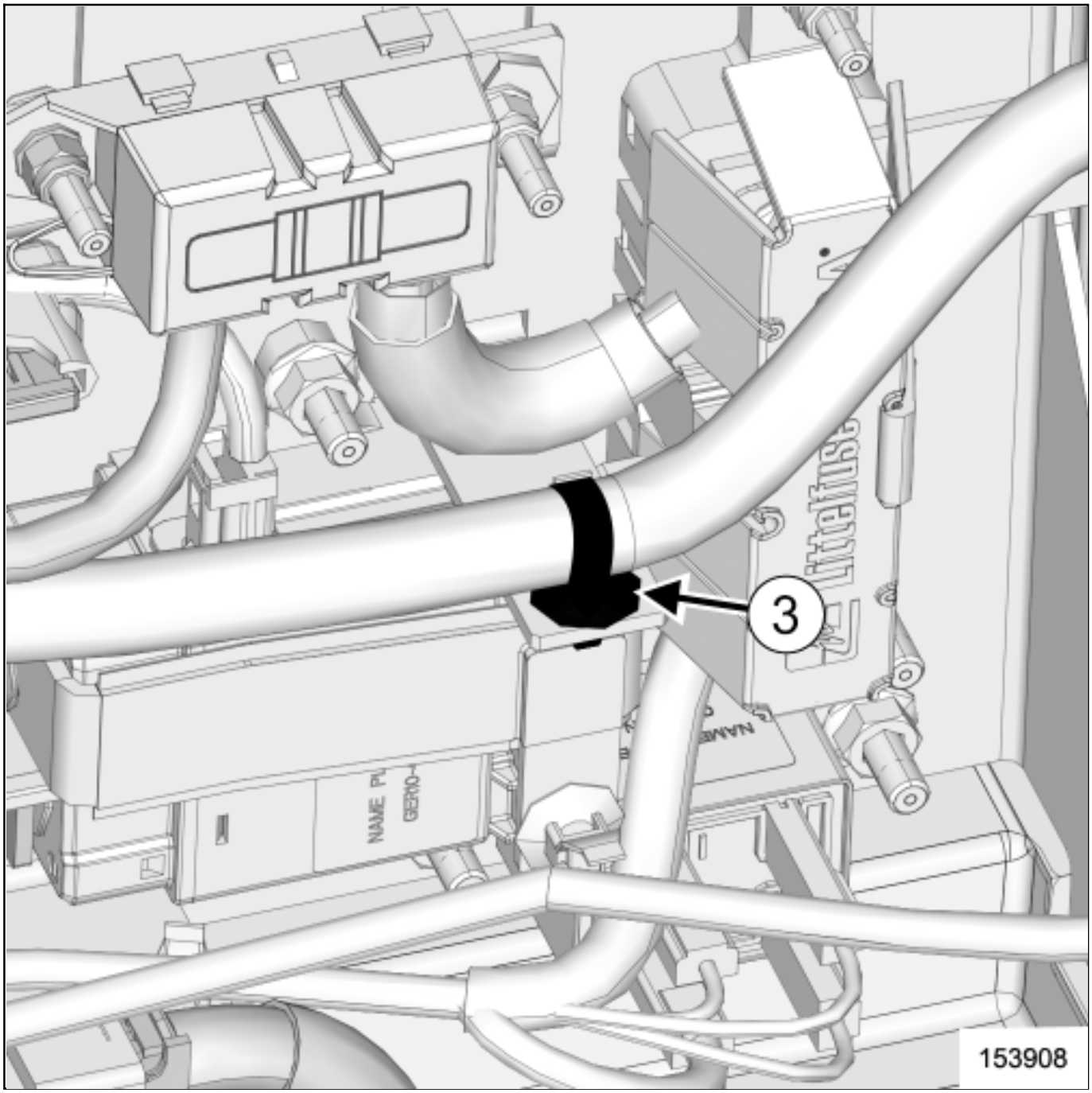

Unclip the clip(3) from the traction battery internal low voltage wiring using an insulated needle nose pliers.

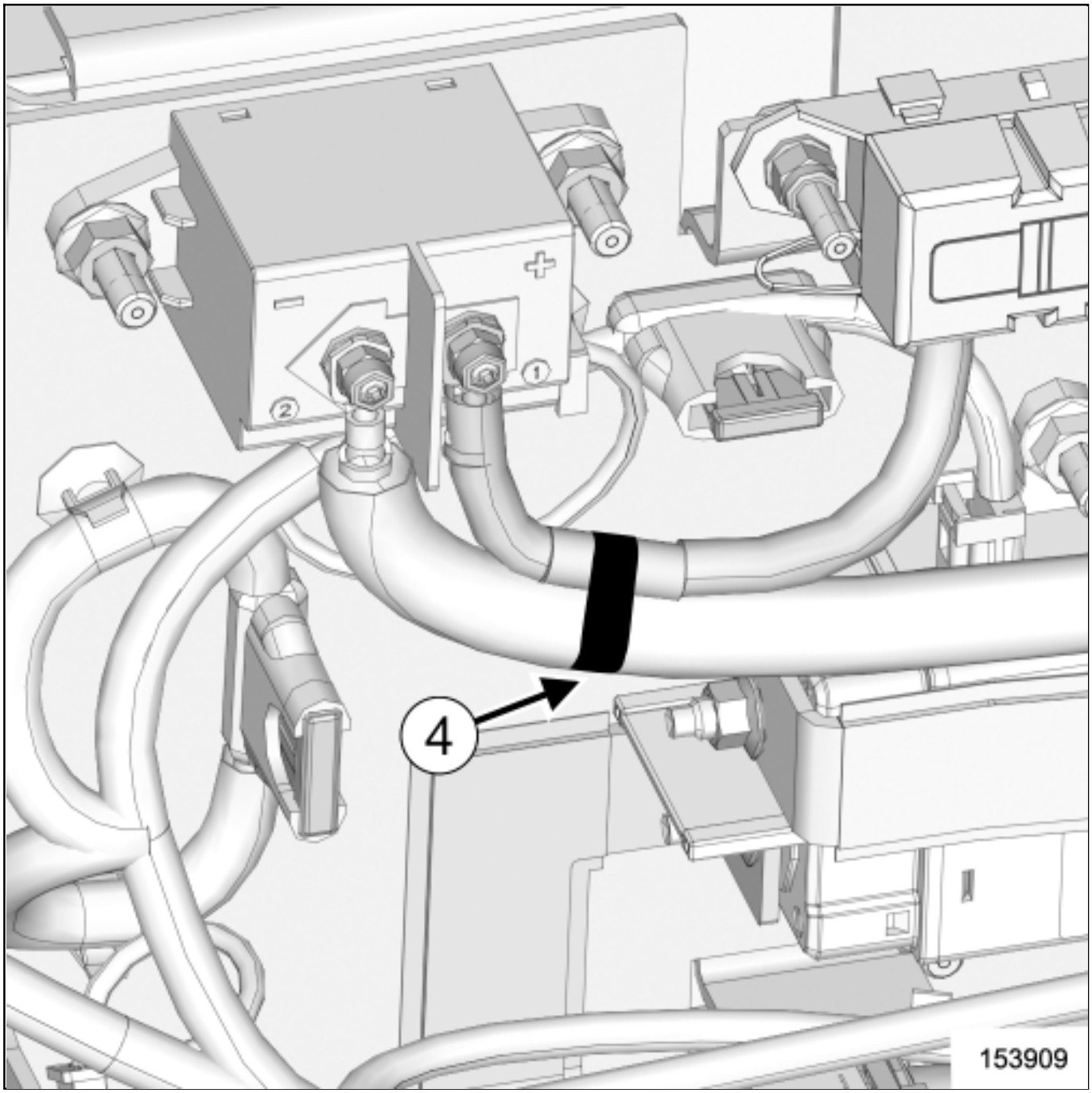

❑

Cut the clamp(4) between the wires using an insulated wire cutters.

2. REMOVAL OPERATION

❑

Remove the electric connection nut from the "-" terminal of the charge relay using an insulated magnetic H7 socket(see 19E, Traction battery, Traction battery module stack assembly : Exploded view) .

❑

Move the "-" wire from the charge relay.

❑

Insulate the "-" wire of the charge relay.

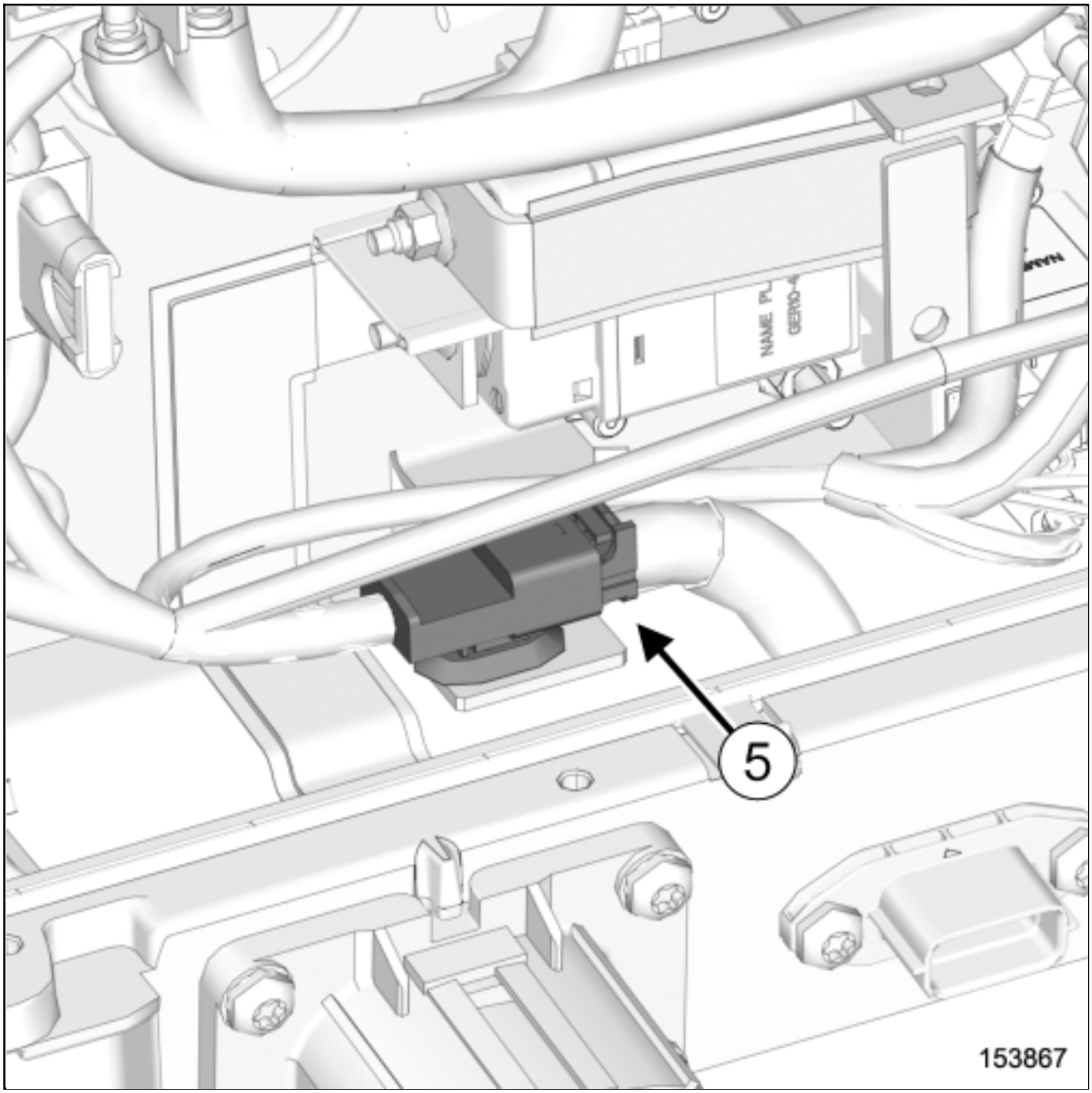

❑

Disconnect the traction battery low voltage connector plug(5) using the toolSet of trim removal levers. (Car. 1363) .

❑

Unclip the traction battery low voltage connector socket using the toolSet of trim removal levers.

(Car. 1363) .

❑

Remove the electric connection screw between the "+" bus bar and high voltage connector between converter and traction battery socket using an insulated magnetic H8 socket(see 19E, Traction battery, Traction battery module stack assembly : Exploded view) .

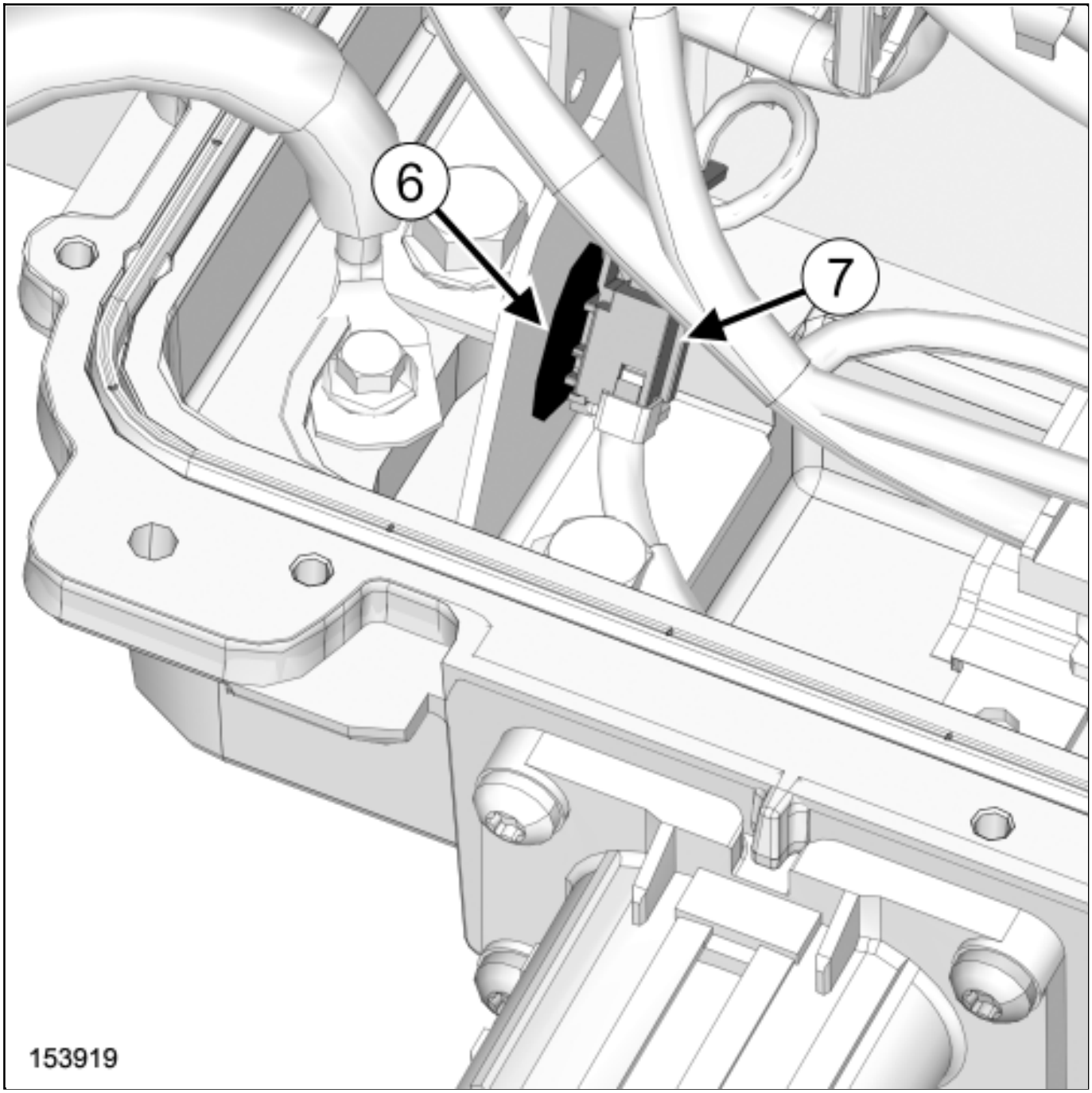

❑

Unclip the high voltage connector between converter and traction battery interlock clip(6) using the toolSet of trim removal levers.(Car. 1363) .

❑

Disconnect the high voltage connector between converter and traction battery interlock plug(7) using the toolSet of trim removal levers.(Car. 1363) .

❑

Remove (see 19E, Traction battery, Traction battery module stack assembly : Exploded view) :

- the traction battery internal junction box screws using an insulated magnetic H13 socket,
- the traction battery internal junction box.

> Note:
>
> Fit the junction box on a clean area.

REFITTING

1. REFITTING PREPARATION OPERATION

❑

Part always to be replaced:

- the electric connection nut on the "-" terminal of the charge relay.

❑

Clean the lower cover rear side with a vacuum cleaner equipped with a plastic nozzle.

❑

Check the presence of the "-" bus bar in the bottom of the lower cover.

2. REFITTING OPERATION

❑

Refit the traction battery internal junction box.

Note:

Pay attention to the wiring.

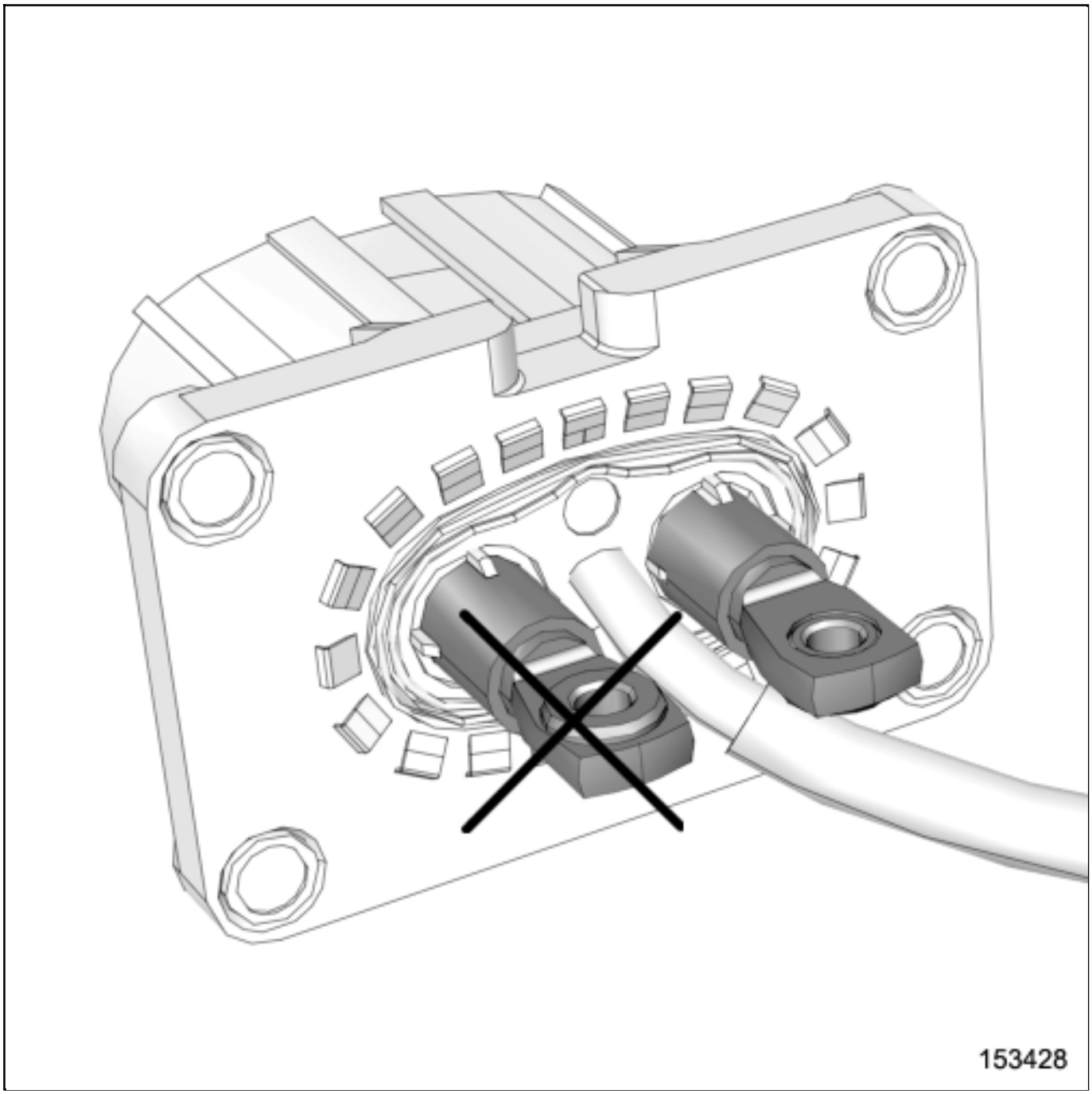

Note:

Pay attention to the orientation of the rods of the connector (flat faces on the top).

Refit the traction battery internal junction box screws using an insulated magnetic H13 socket (see 19E, Traction battery, Traction battery module stack assembly : Exploded view) .

❑

Torque tighten the traction battery internal junction box screws using an insulated magnetic H13 socket (see 19E, Traction battery, Traction battery module stack assembly : Exploded view) .

❑

Mark always screws with a paint markerof a color different from the original.

❑

Connect the high voltage connector between converter and traction battery interlock plug.

❑

Clip the high voltage connector between converter and traction battery interlock clip.

❑

Refit the electric connection screw between the "+" bus bar and high voltage connector between converter and traction battery socket using an insulated magnetic H8 socket(see 19E, Traction battery, Traction battery module stack assembly : Exploded view) .

❑

Torque tighten the electric connection screw between the "+" bus bar and high voltage connector between converter and traction battery socket using an insulated magnetic H8 socket(see 19E, Traction battery, Traction battery module stack assembly : Exploded view) .

❑

Mark always screw with a paint markerof a color different from the original.

❑

Clip the traction battery low voltage connector socket.

❑

Connect the traction battery low voltage connector plug.

❑

Remove the insulation from the "-" wire of the charge relay.

❑

Fit the "-" wire on the charge relay.

❑

Refit the new electric connection nut on the "-" terminal of the charge relay using an insulated magnetic H7 socket(see 19E, Traction battery, Traction battery module stack assembly : Exploded view) .

❑

Torque tighten the electric connection nut on the "-" terminal of the charge relay using an insulated magnetic H7 socket(see 19E, Traction battery, Traction battery module stack assembly : Exploded view) .

❑

Mark always nut with a paint markerof a color different from the original.

❑

Proceed in the reverse order to removal.

TRACTION BATTERY INTERNAL LOW VOLTAGE WIRING : REMOVAL - REFITTING

Note, one or more warnings are present in this procedure

Special tooling required	
Set of trim removal levers.	Car. 1363

Locations and specifications (tightening torques, parts always to be replaced, etc.)(see 19E, Traction battery, Traction battery module stack assembly : Exploded view) .

WARNING

To avoid all risk of damage to the systems, apply the safety and cleanliness instructions and operation recommendations before carrying out any repair:

(see 19E, Traction battery, Traction battery : Precautions for the repair) ,

Vehicle: Precautions for the repair .

WARNING

DANGER: HIGH VOLTAGE VEHICLE.

Risks of serious burns or electric shock that may prove fatal.

Before carrying out any work on the vehicle, it is essential that you adhere to the instructions regarding vehicle voltage cut-off. This work must be carried out by an employee who is qualified and authorized to work on a high-voltage onboard network.

REMOVAL

1. REMOVAL PREPARATION OPERATION

❑

Remove the traction battery upper cover(see 19E, Traction battery, Traction battery housing assembly : Exploded view) .

2. REMOVAL OPERATION

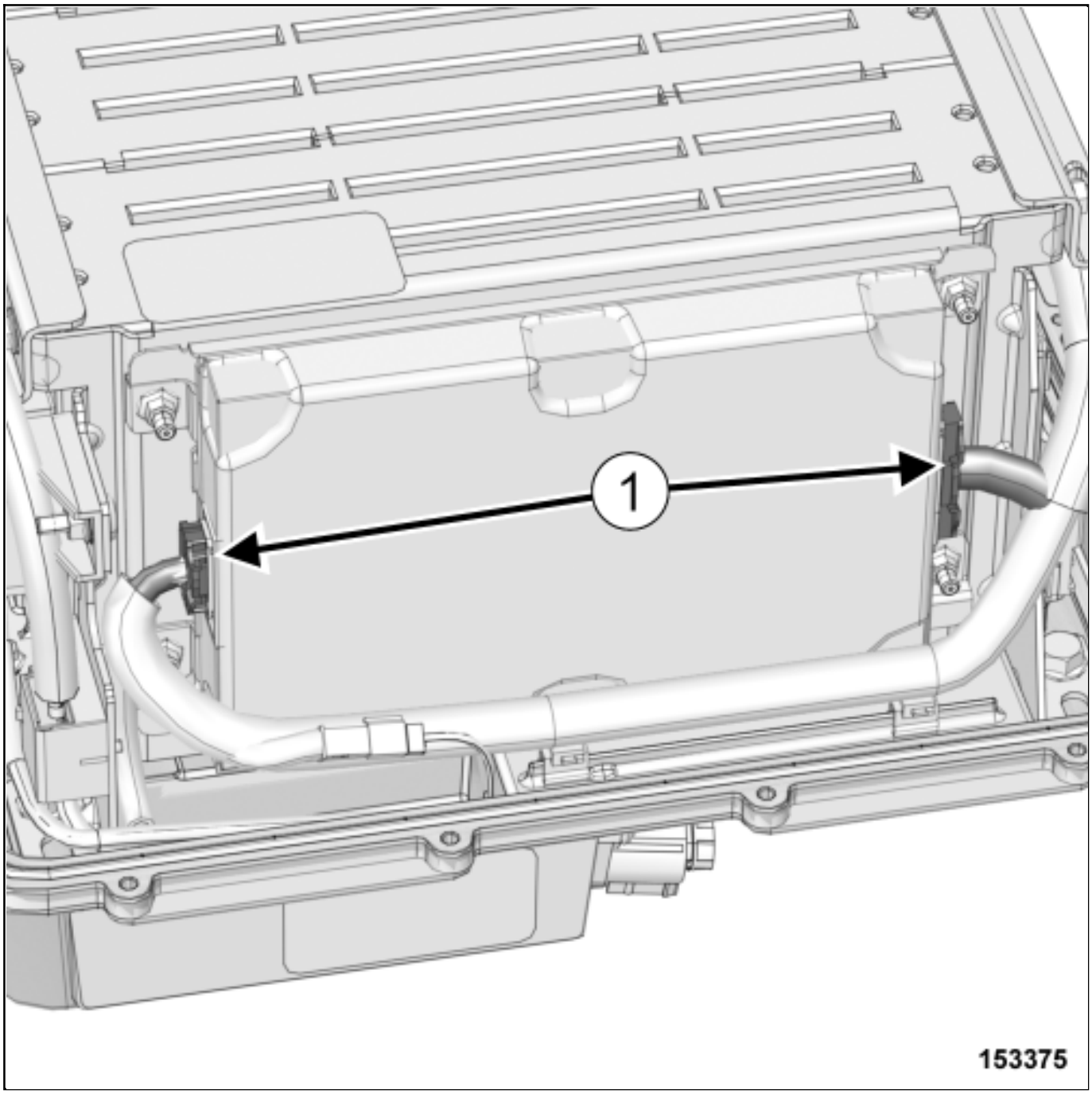

❑

Disconnect the traction battery computer plugs(1) using the toolSet of trim removal levers.(Car. 1363) .

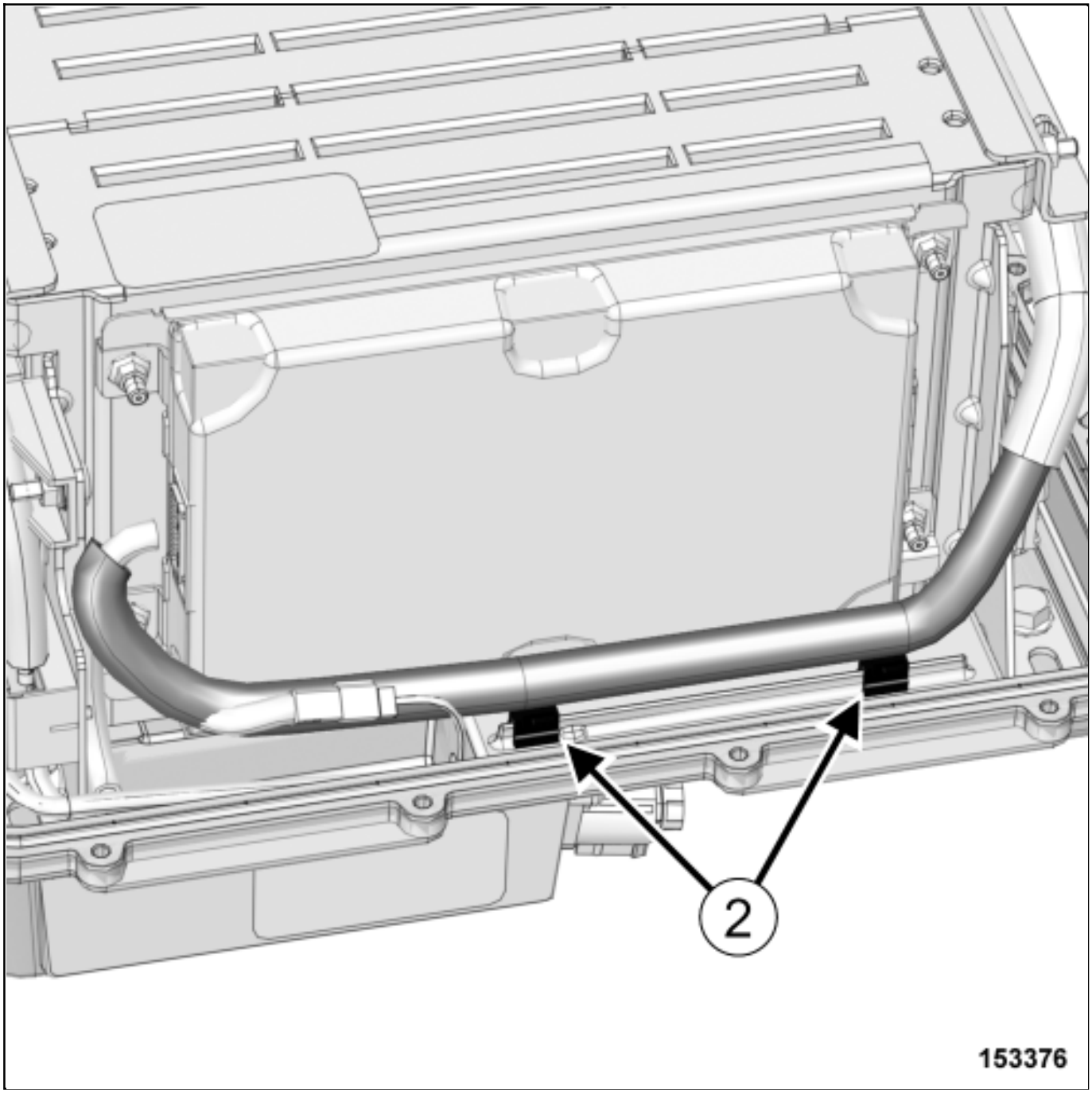

Unclip the traction battery internal low voltage wiring clips(2) from the traction battery lower cover using the toolSet of trim removal levers.(Car. 1363) .

Remove the traction battery internal low voltage wiring "-" electric connection nut from the traction battery lower cover using an insulated magnetic H8 socket(see 19E, Traction battery, Traction battery module stack assembly : Exploded view) .

Move the "-" wire of the high voltage connector between charger and traction battery from the

traction battery lower cover.

- Insulate the "-" wire of the high voltage connector between charger and traction battery.

- Move the "-" wire of the traction battery low voltage wiring from the traction battery lower cover.

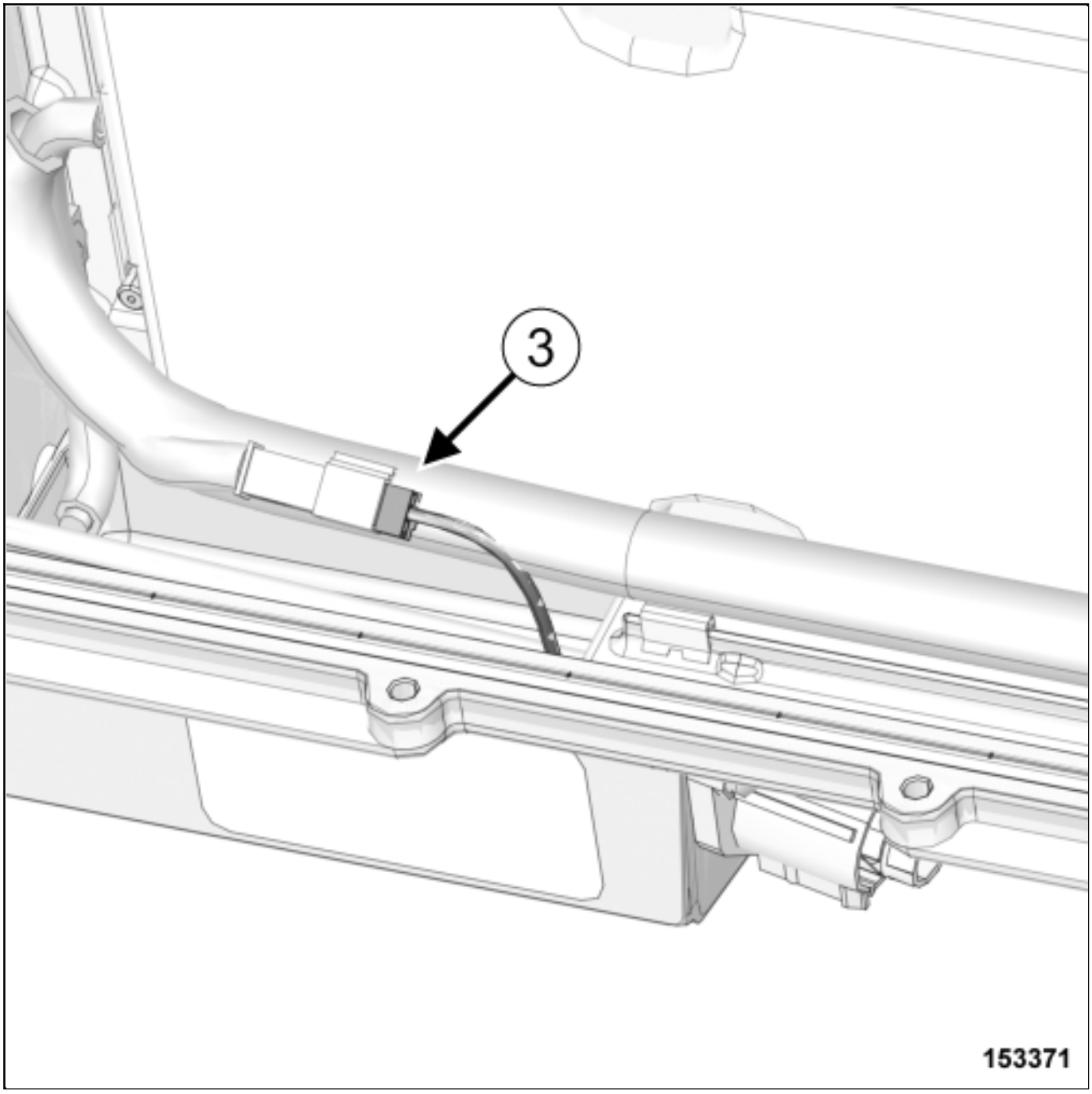

- Disconnect the high voltage connector between charger and traction battery interlock plug(3) using the toolSet of trim removal levers.(Car. 1363) .

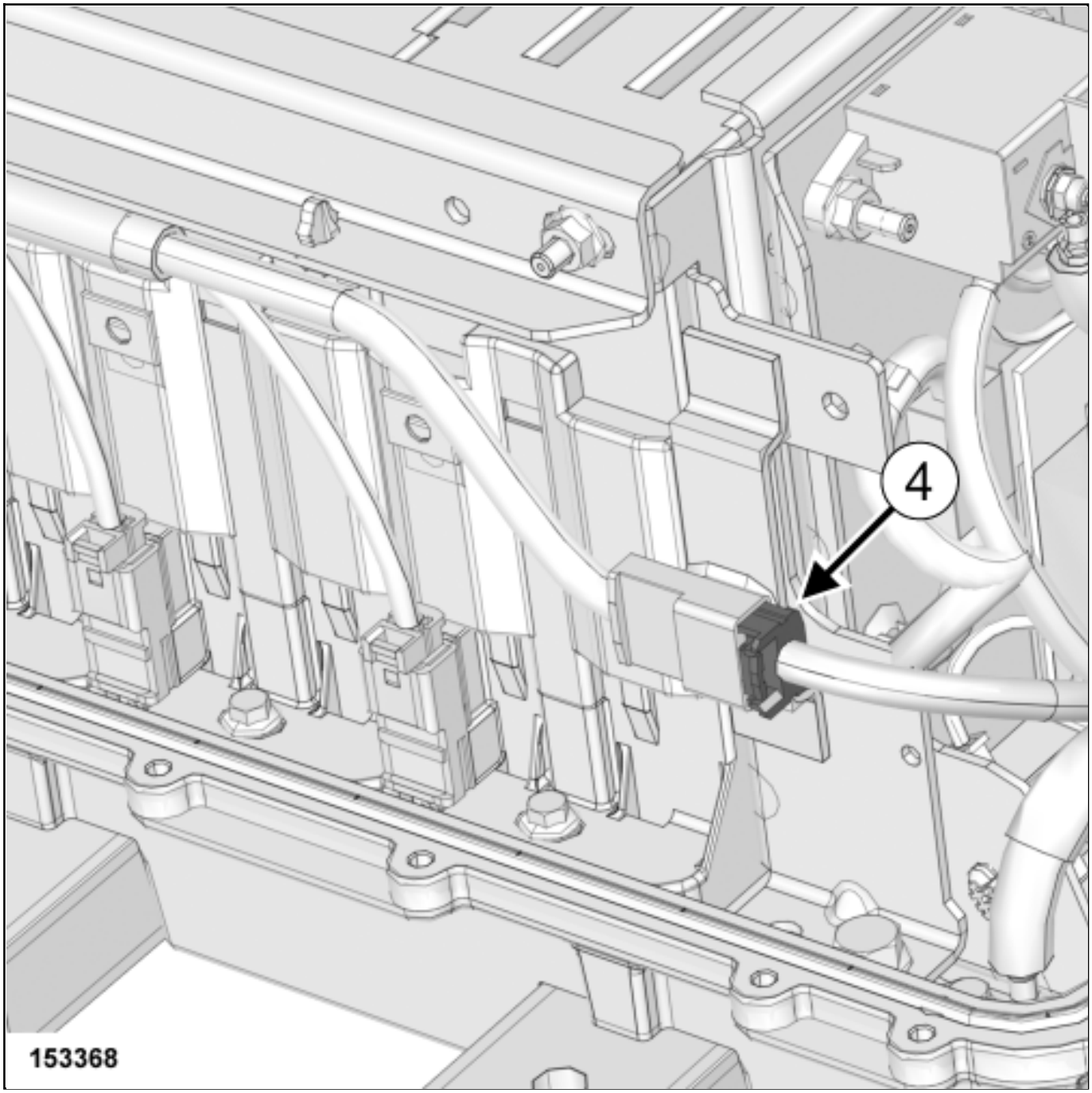

- Disconnect the traction battery internal low voltage wiring plug(4) using the toolSet of trim removal levers. (Car. 1363) .

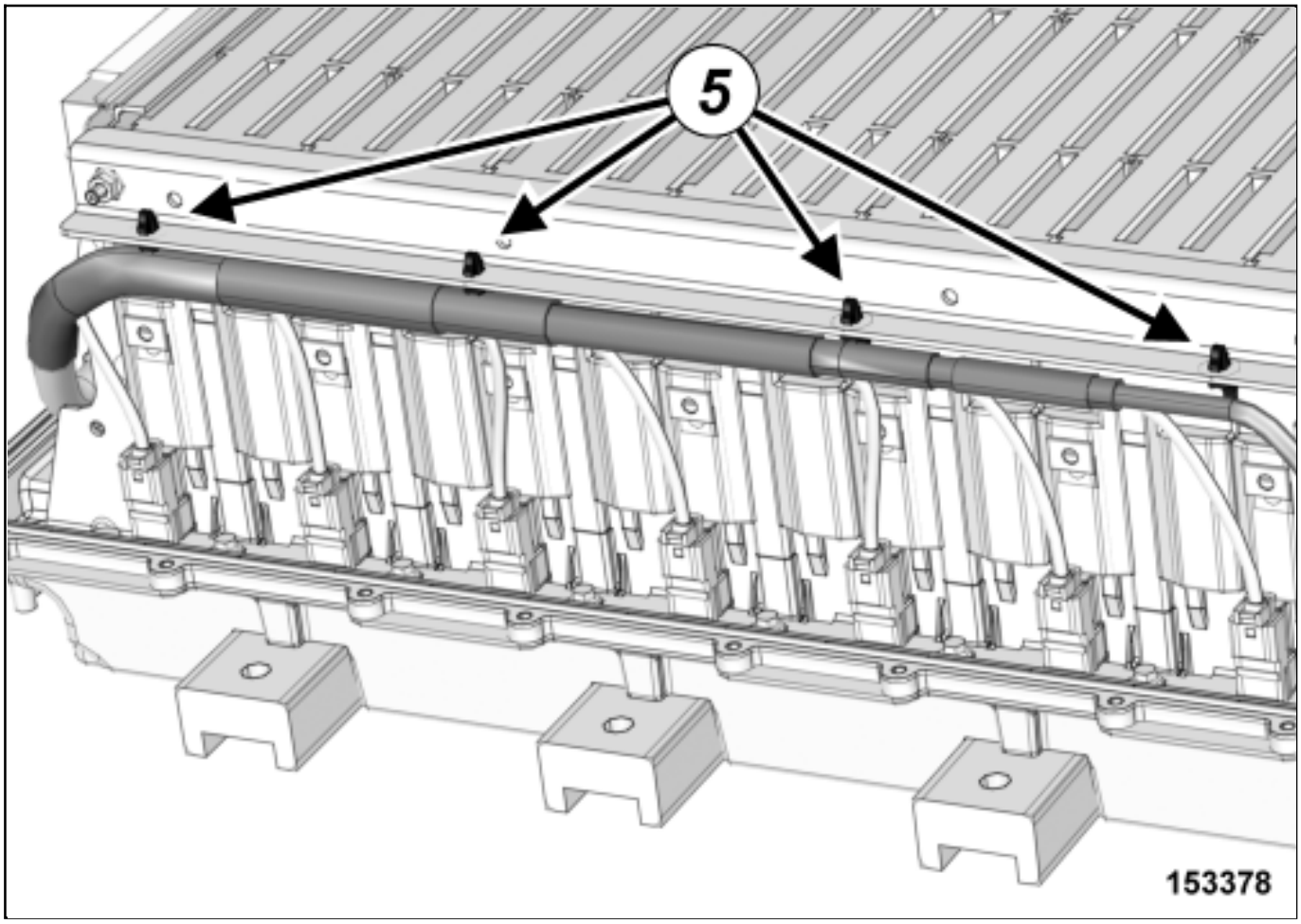

Unclip the clips(5) of the traction battery internal low voltage wiring from the traction battery module stack left transverse bar using an insulated needle nose pliers.

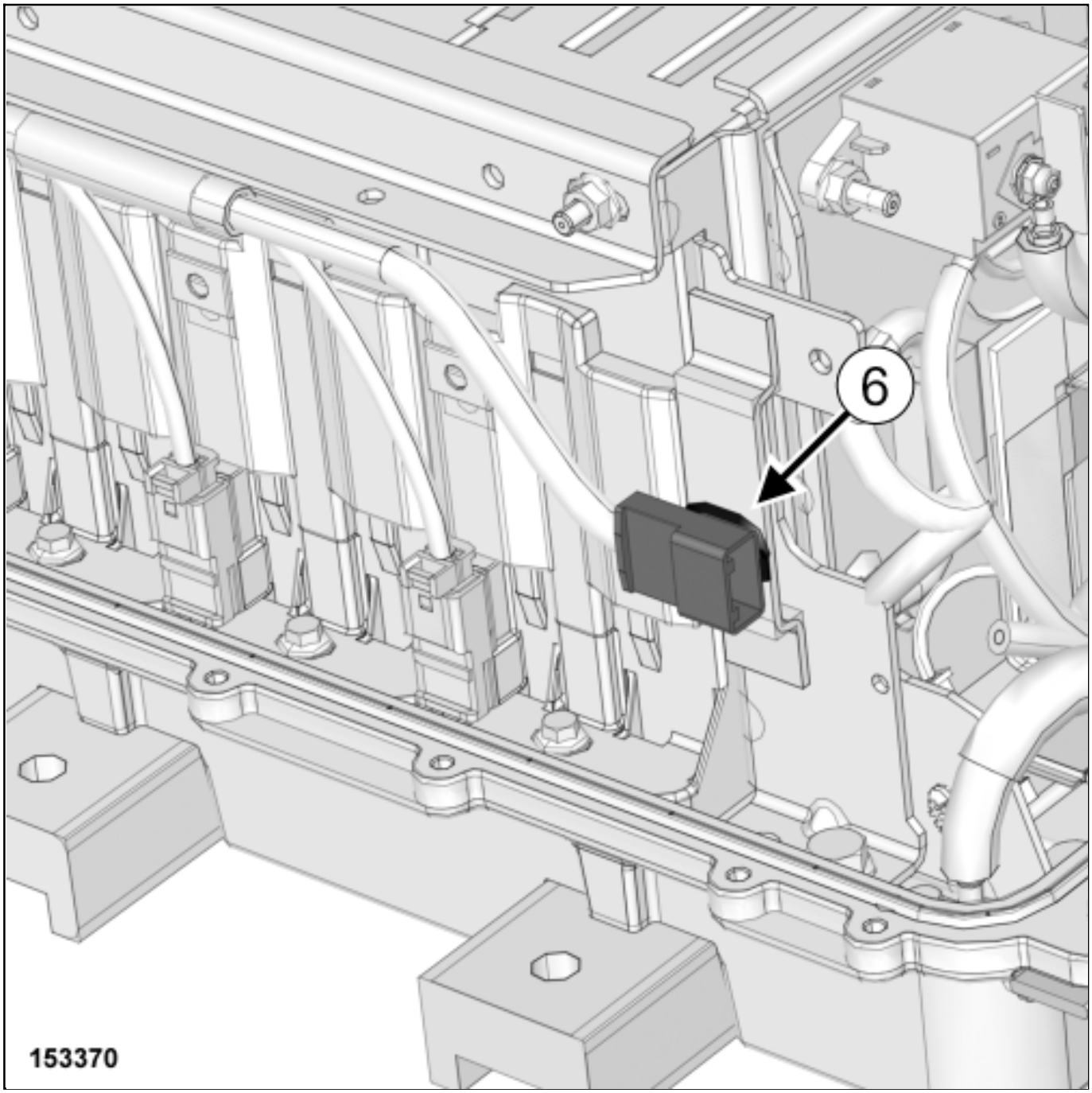

Unclip the traction battery internal low voltage wiring socket(6) from the rear end plate using the tool Set of trim removal levers.(Car. 1363) .

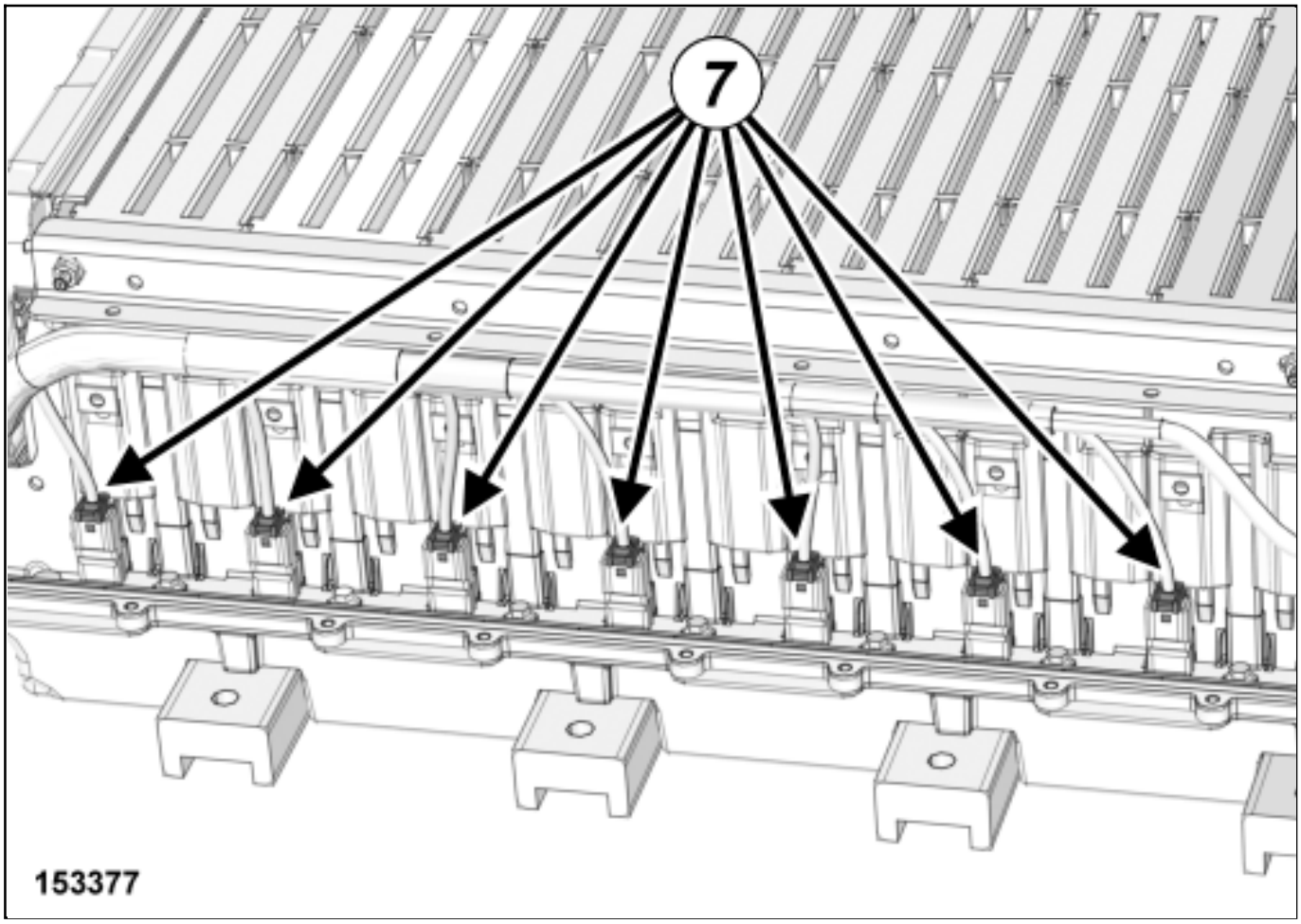

❑

Disconnect the traction battery module connectors(7) using the toolSet of trim removal levers. (Car. 1363) .

❑

Remove the traction battery internal low voltage wiring.

REFITTING

1. REFITTING PREPARATION OPERATION

Note:

In case of refitting of the wiring of origin, replace the damaged clips.

Pay attention to the good state of the wiring.

2. REFITTING OPERATION

- Fit the traction battery internal low voltage wiring.

- Clip:
  - the traction battery internal low voltage wiring socket on the rear end plate,
  - the clips of the the traction battery internal low voltage wiring on the traction battery module stack left transverse bar.

- Refit the "-" wire of the traction battery low voltage wiring on the traction battery lower cover.

- Remove the insulation from the "-" wire of the high voltage connector between charger and traction battery.

- Refit the "-" wire of the high voltage connector between charger and traction battery on the traction battery lower cover.

- Refit the traction battery internal low voltage wiring "-" electric connection nut on the traction battery lower cover using an insulated magnetic H8 socket(see 19E, Traction battery, Traction battery module stack assembly : Exploded view) .

Note:

Pay attention to the wiring, there are two "-" wires.

- Torque tighten the traction battery internal low voltage wiring electric connection nut using an insulated magnetic H8 socket(see 19E, Traction battery, Traction battery module stack assembly : Exploded view).

- Mark always nut with a paint markerof a color diffrent from the original.

- Connect:
  - the high voltage connector between charger and traction battery interlock plug,
  - the traction battery computer plugs.

- Clip the traction battery internal low voltage wiring clips on the traction battery lower cover.

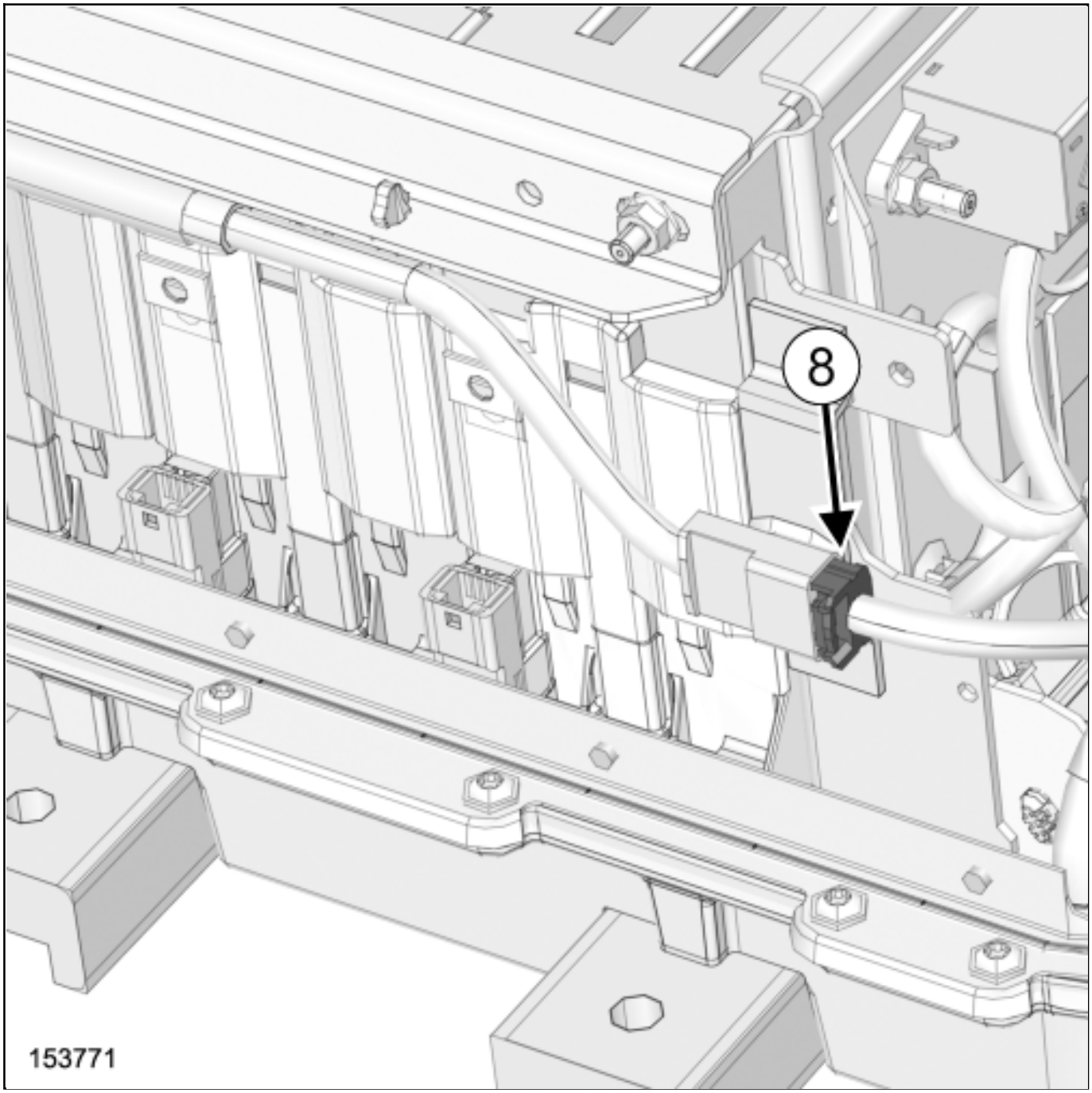

- Connect the traction battery internal low voltage wiring plug(8) .

- Vacuum the 7 traction battery module connectors using a vacuum cleaner equipped with a plastic nozzle.

- Connect the 7 traction battery module connectors.

Note:

Attention to mechanical damage of the wirings (no pinch, no crush).

Observe the path of the wiring.

Proceed in the reverse order to removal.

Repair-14x02x01x74-01x37-1-4-1.xml

XSL version : 3.02 du 22/07/11

TRACTION BATTERY INTERNAL RELAYS : REMOVAL - REFITTING

Note, one or more warnings are present in this procedure

Special tooling required	
Set of trim removal levers.	Car. 1363

Locations and specifications (tightening torques, parts always to be replaced, etc.)(see 19E, Traction battery, Traction battery module stack assembly : Exploded view) .

WARNING

To avoid all risk of damage to the systems, apply the safety and cleanliness instructions and operation recommendations before carrying out any repair:

(see 19E, Traction battery, Traction battery : Precautions for the repair) ,

Vehicle: Precautions for the repair .

WARNING

DANGER: HIGH VOLTAGE VEHICLE.

Risks of serious burns or electric shock that may prove fatal.

Before carrying out any work on the vehicle, it is essential that you adhere to the instructions regarding vehicle voltage cut-off. This work must be carried out by an employee who is qualified and authorized to work on a high-voltage onboard network.

REMOVAL

1. REMOVAL PREPARATION OPERATION

Remove the traction battery upper cover(see 19E, Traction battery, Traction battery housing assembly :

Exploded view) .

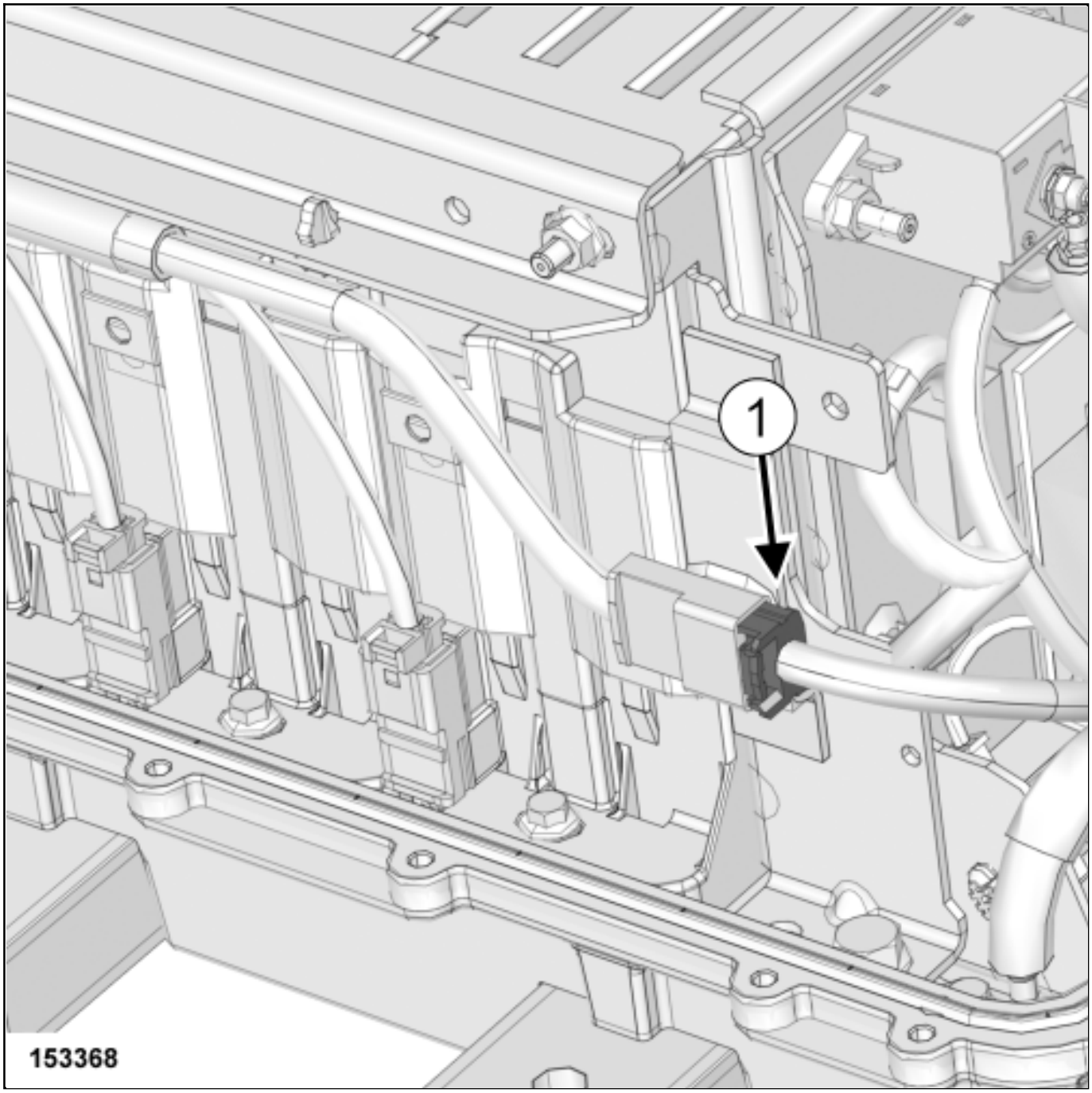

❑

Disconnect the traction battery internal low voltage wiring plug(1) using the toolSet of trim removal levers. (Car. 1363) .

2. REMOVE THE TRACTION BATTERY CHARGE RELAY

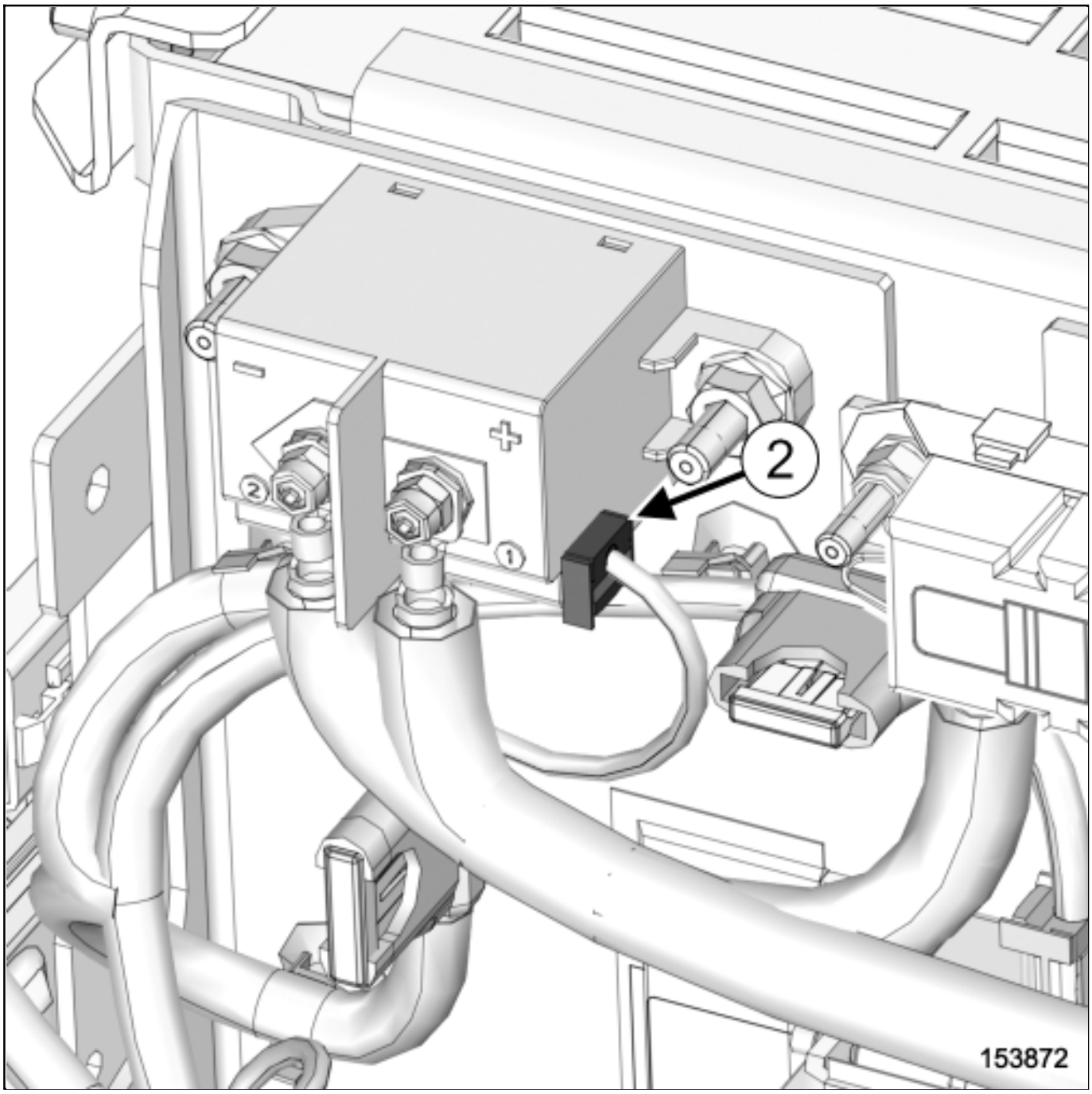

- Disconnect the charge relay plug(2) .

- Remove the charge relay negative electric connection nut using an insulated magnetic H7 socket (see 19E, Traction battery, Traction battery module stack assembly : Exploded view) .

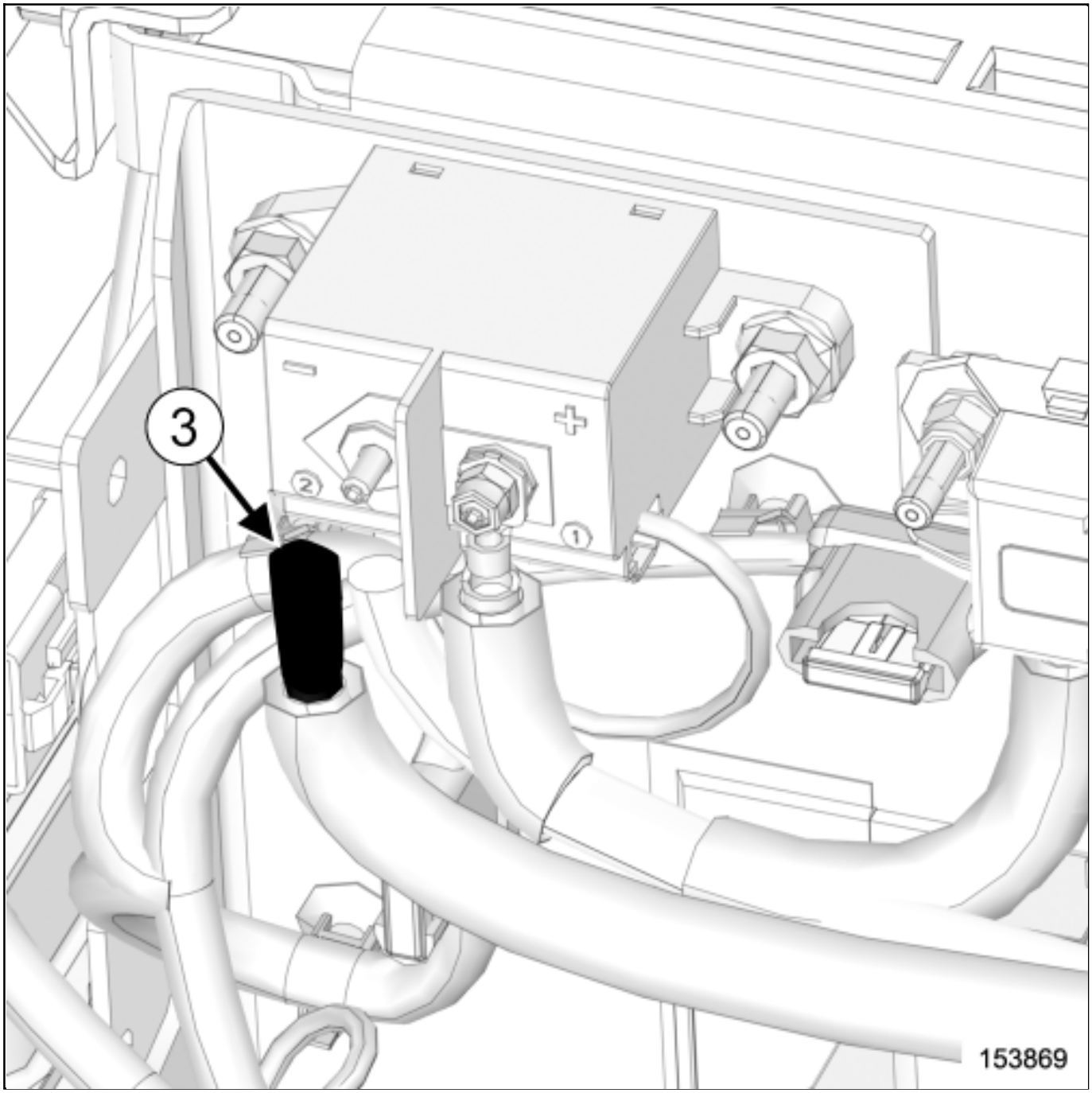

- Move the electric wire between charge relay and traction battery module stack.

- Insulate the electric wire between charge relay and traction battery module stack(3) .

- Remove the charge relay positive electric connection nut using an insulated magnetic H7 socket (see 19E, Traction battery, Traction battery module stack assembly : Exploded view) .

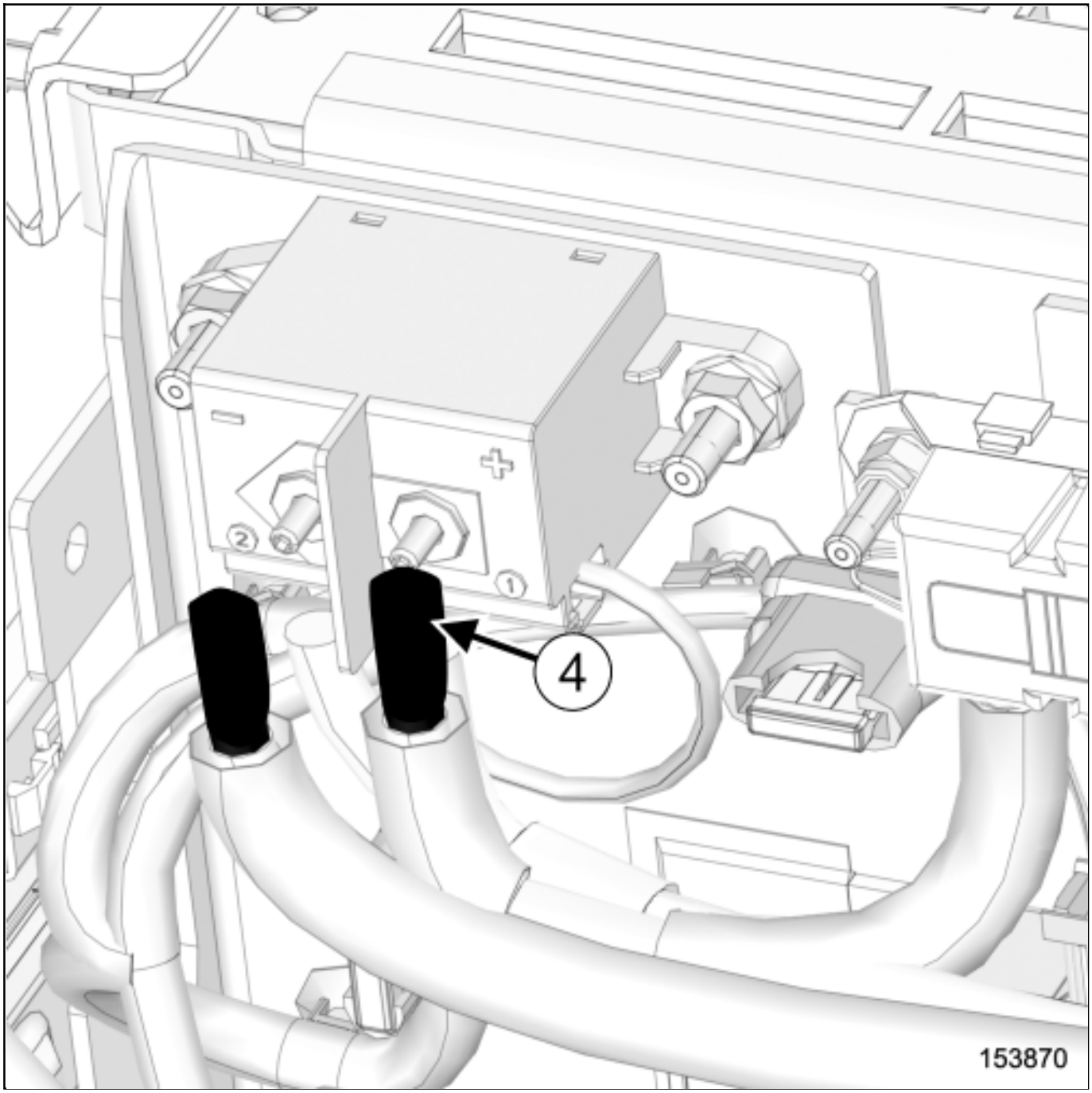

- Move the electric wire between charge fuse and charge relay.

- Insulate the electric wire between charge fuse and charge relay(4) .

- Remove (see 19E, Traction battery, Traction battery module stack assembly : Exploded view) :

  - the traction battery charge relay nuts using an insulated magnetic H10 socket,

■ the traction battery charge relay.

3. REMOVE THE TRACTION BATTERY MAIN RELAY

❑ Remove the traction battery main fuse(see 19E, Traction battery, Traction battery module stack assembly : Exploded view) .

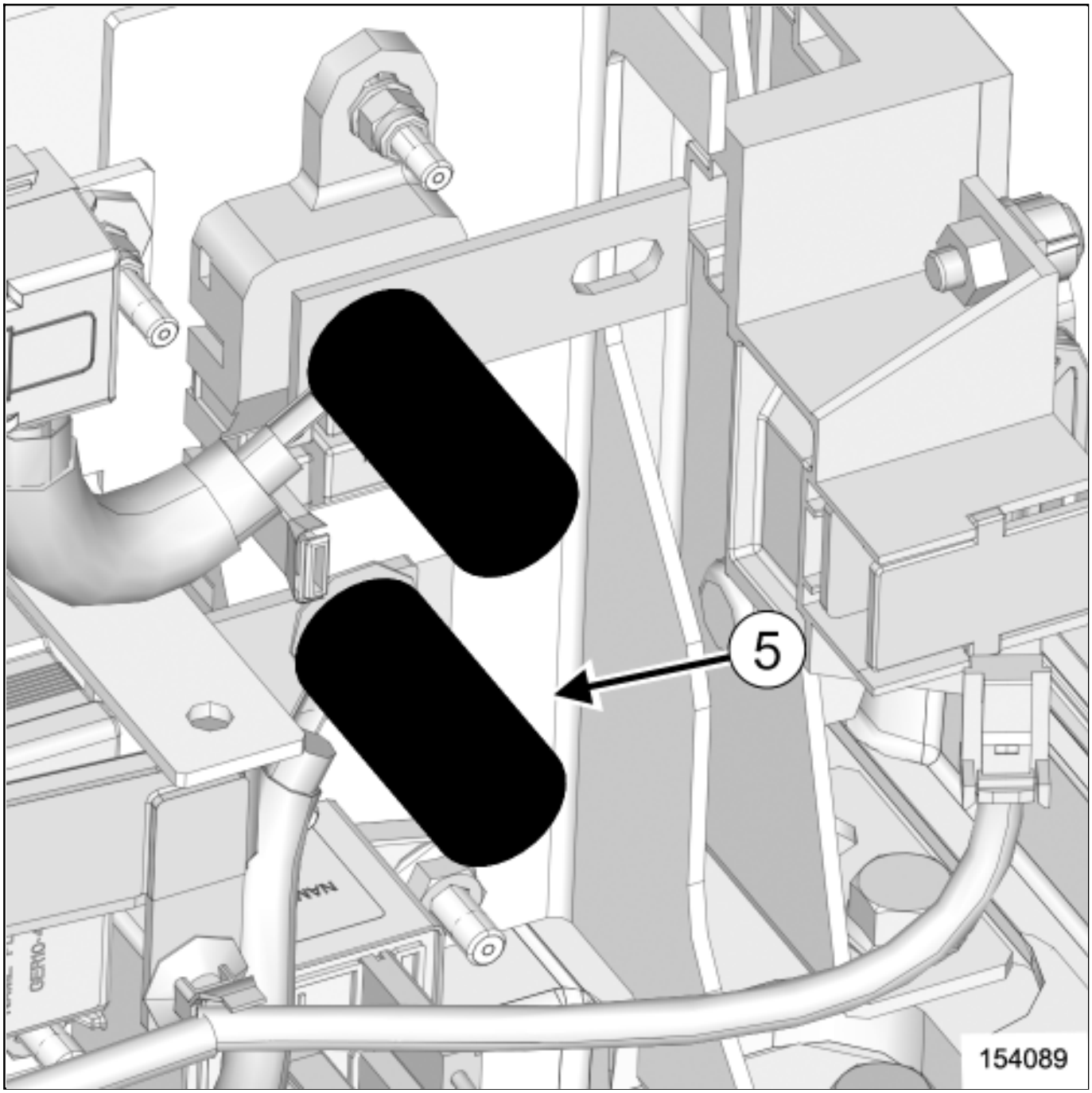

❑ Remove the insulation(5) from the lower terminal of the traction battery main fuse support.

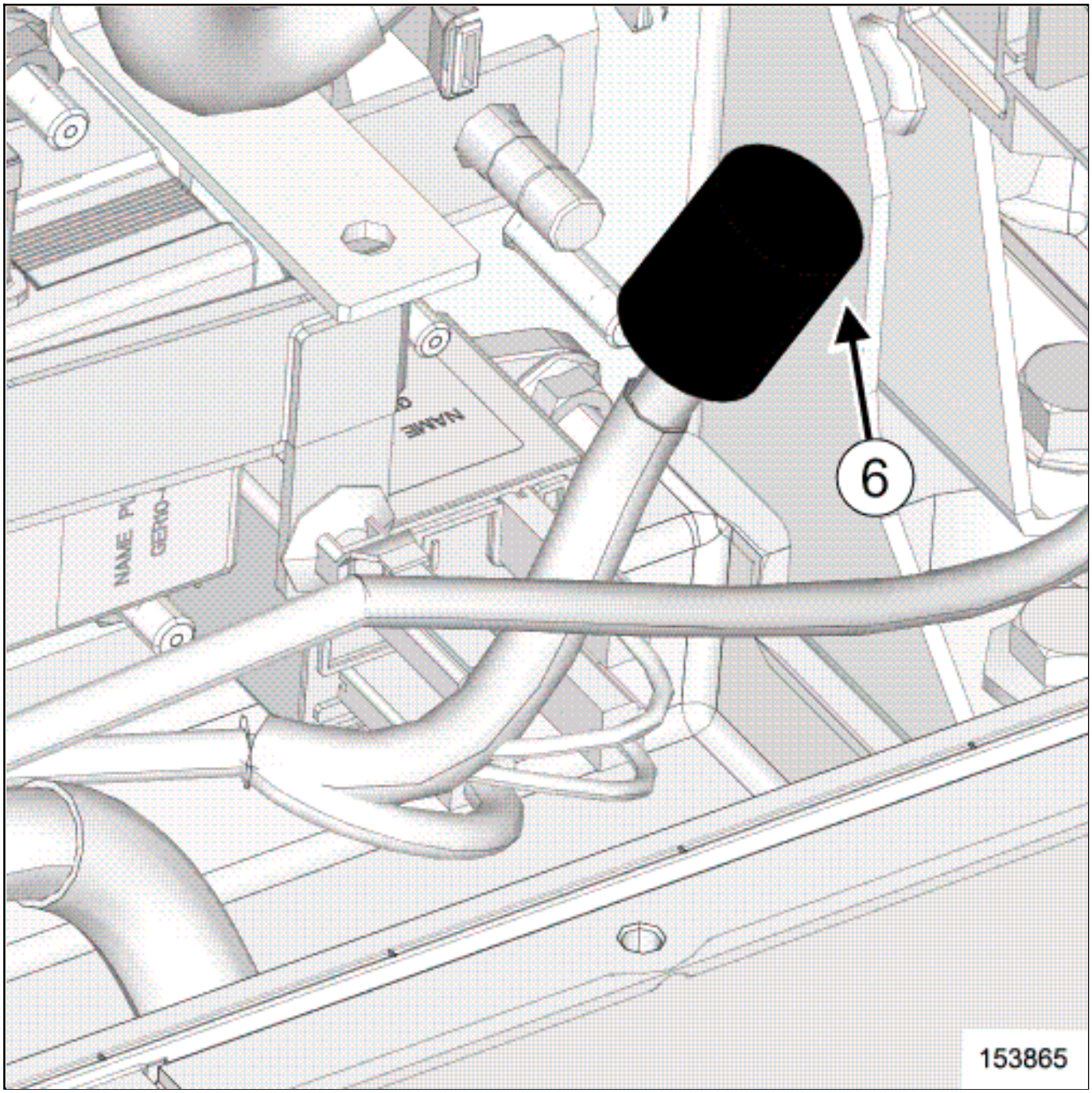

❑ Move the traction battery internal junction box wiring lug from the lower terminal of the traction battery main fuse support using the toolSet of trim removal levers.(Car. 1363) .

❑ Insulate the lug (6) .

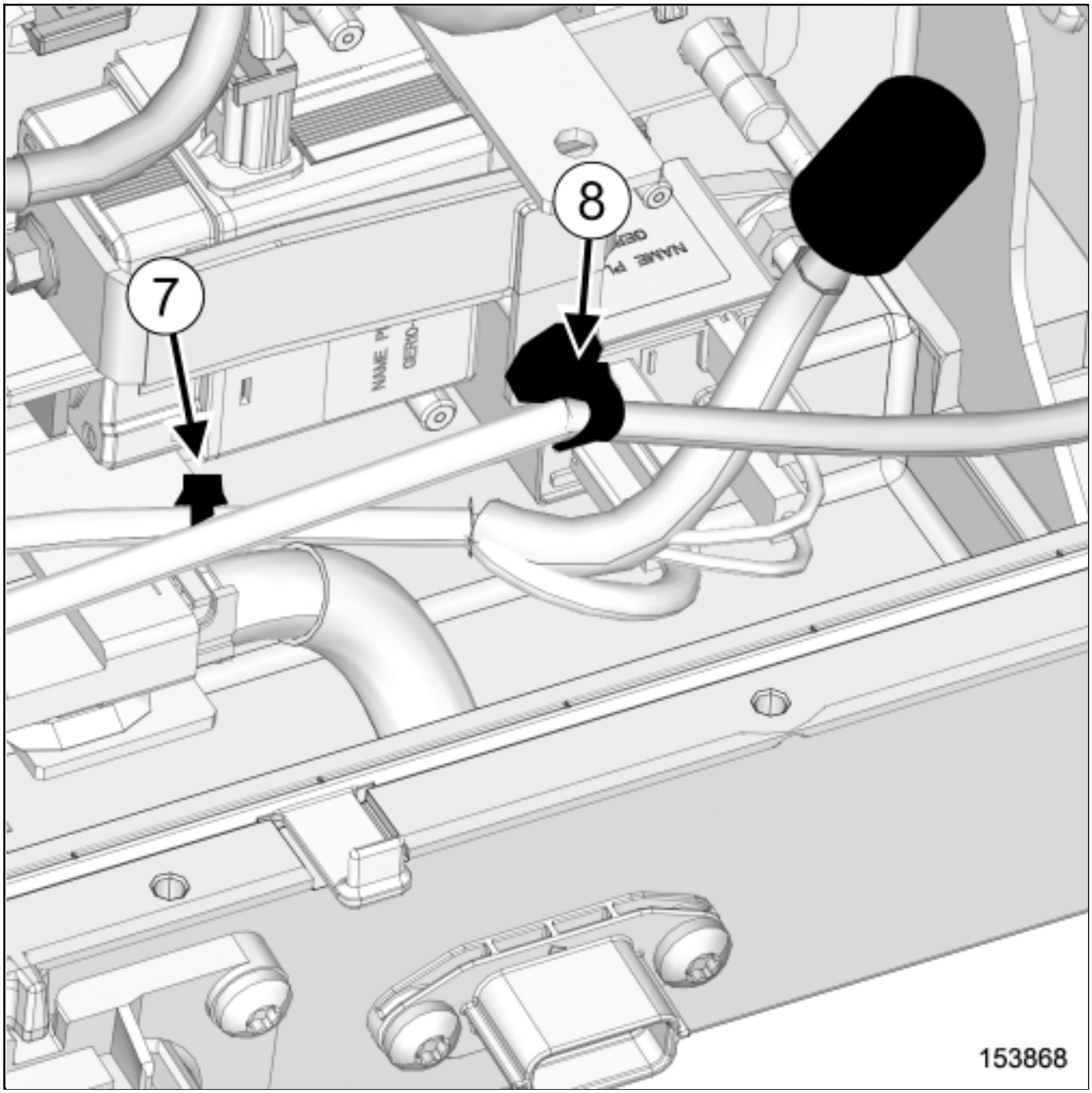

❑ Unclip:

- the clip(7) from the precharge relay wiring using an insulated needle pliers,
- the clip(8) from the traction battery internal junction box wiring using an insulated needle pliers.

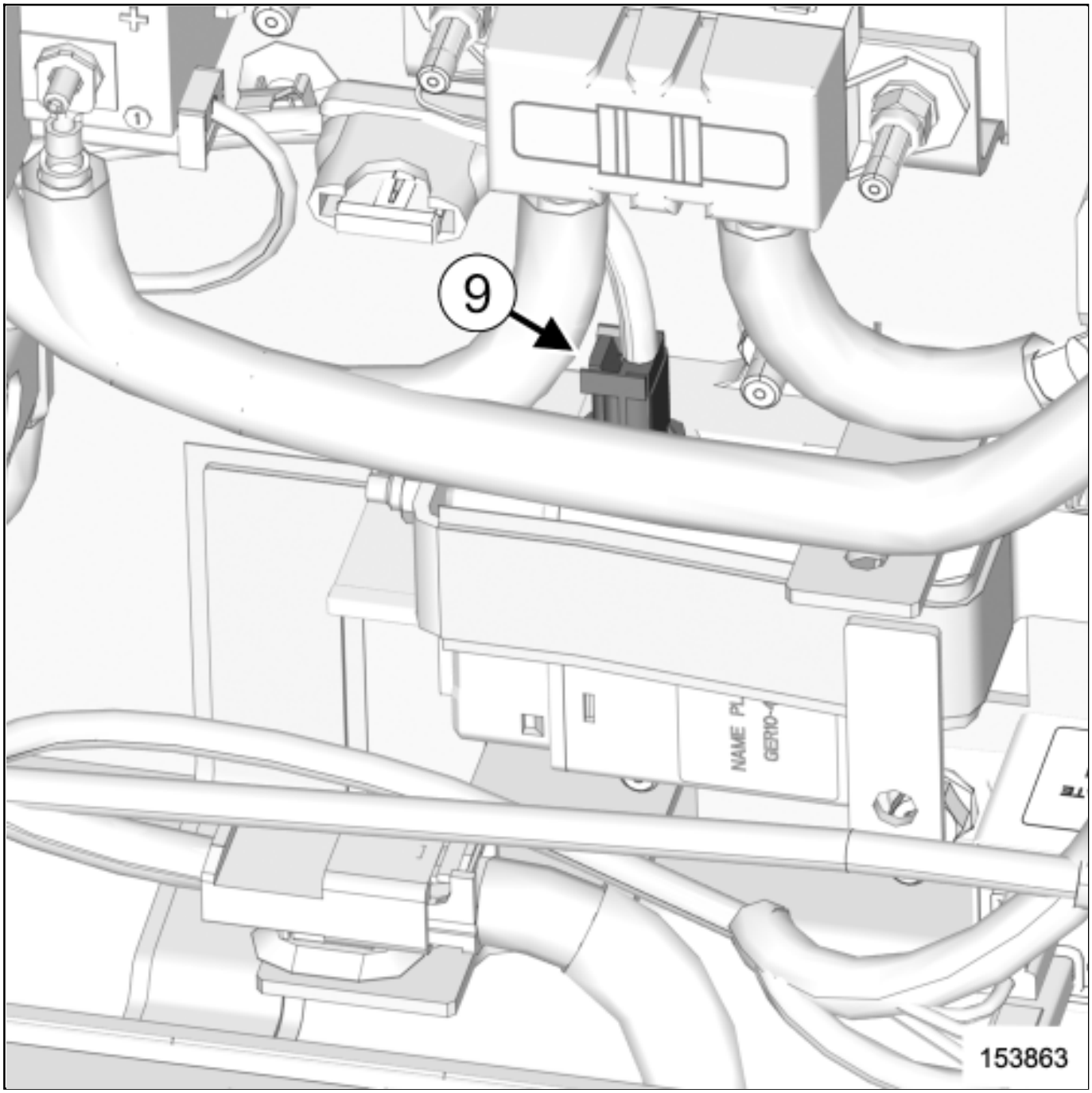

- Disconnect the traction battery main relay plug(9) using the toolSet of trim removal levers.(Car. 1363) .
- Move the traction battery main relay wiring.

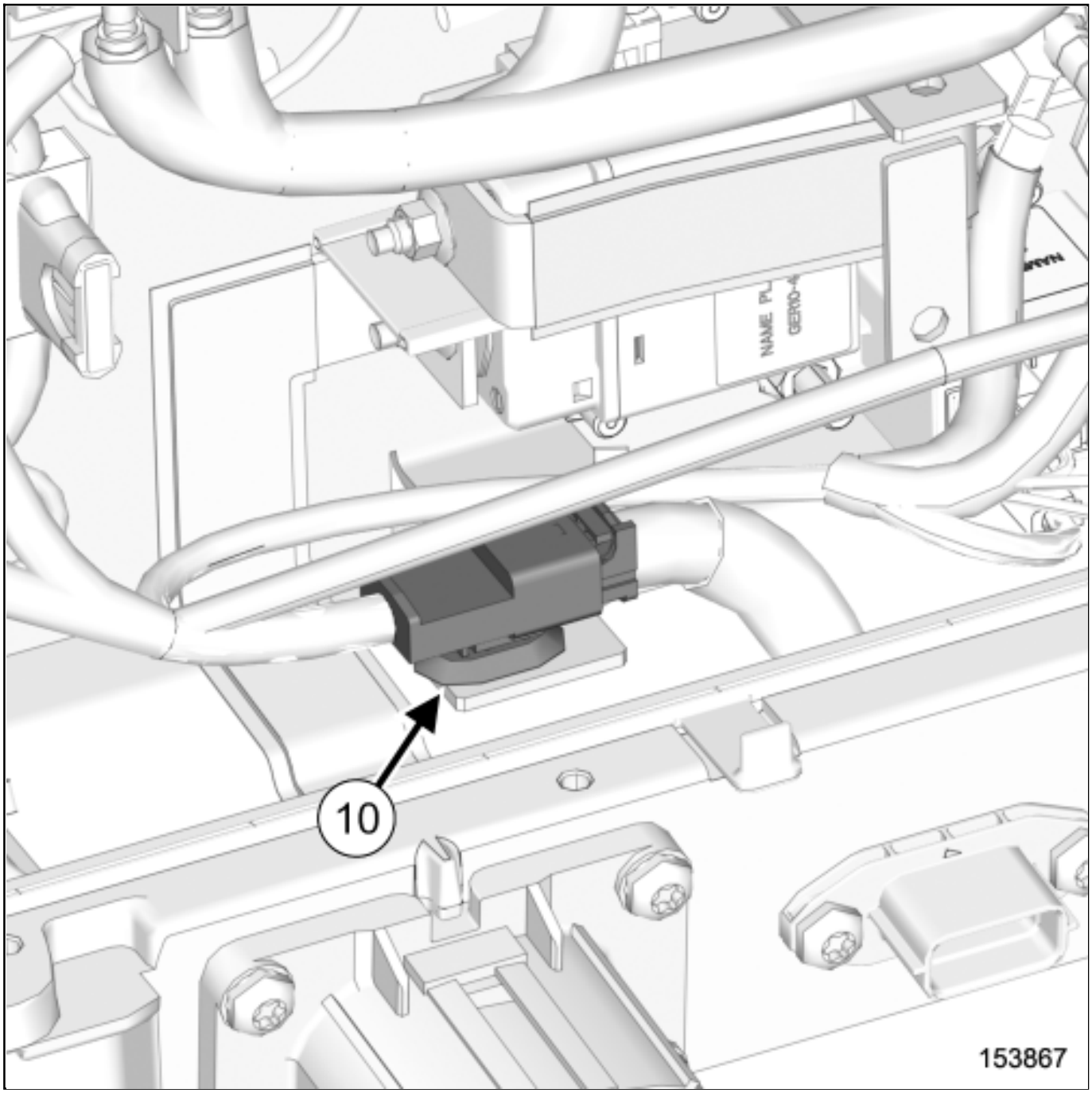

❑ Unclip the traction battery internal junction box wiring clamp(10) using the toolSet of trim removal levers. (Car. 1363) .

❑ Remove (see 19E, Traction battery, Traction battery module stack assembly : Exploded view) :

- the traction battery positive bus bar electric connection screw using an insulated mangetic H8 socket,
- the traction battery main relay lower nut using an insulated magnetic H10 socket,
- the traction battery main relay upper nut using an insulated magnetic H10 socket.

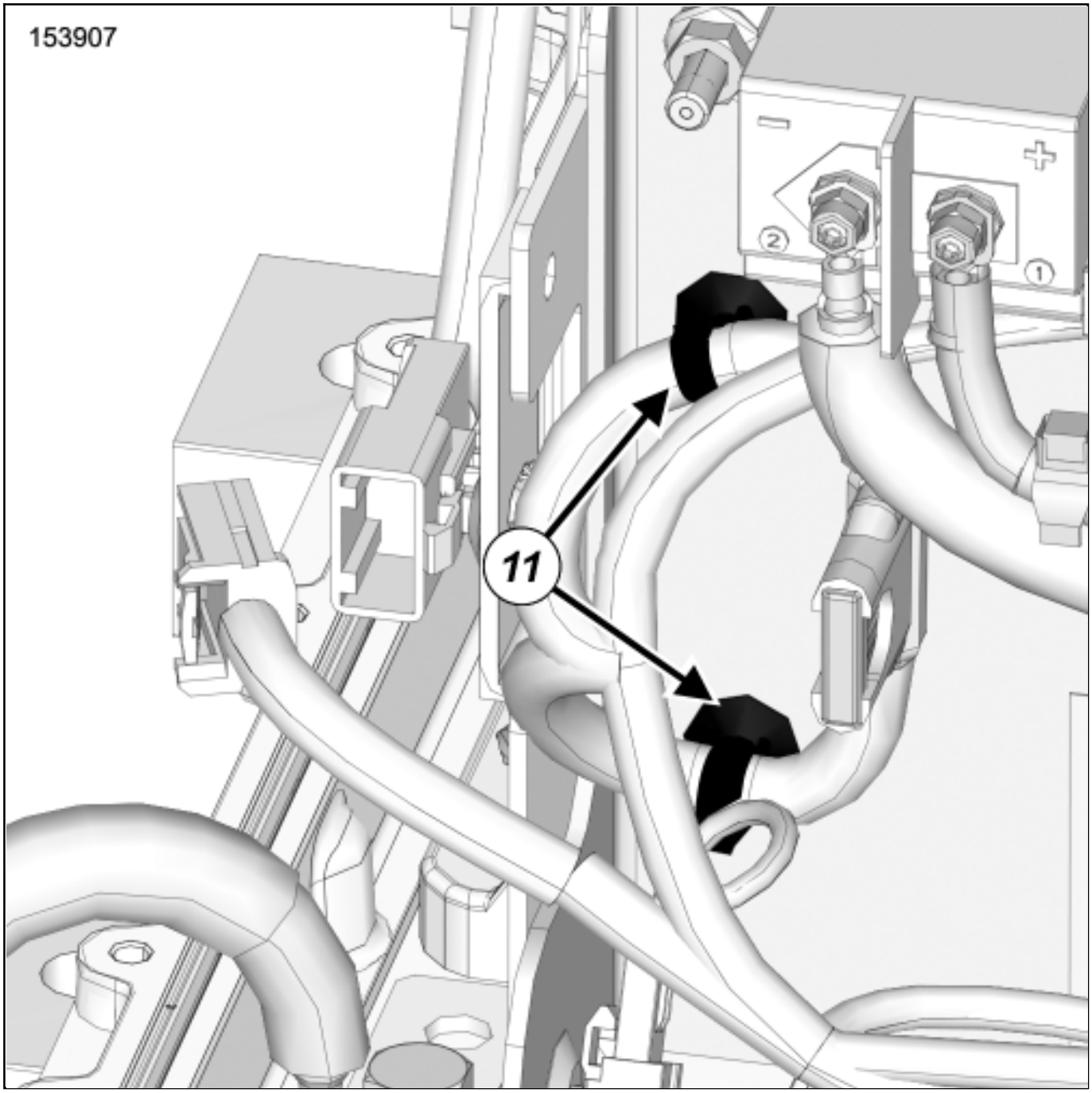

- Unclip the clips(11) from the traction battery internal junction box using the toolSet of trim removal levers. (Car. 1363) .

- Move the traction battery main relay.

- Remove traction battery positive bus bar electric connection nut using an insulated magnetic H10 socket (see 19E, Traction battery, Traction battery module stack assembly : Exploded view) .

- Move the traction battery positive bus bar from the main relay.

- Remove (see 19E, Traction battery, Traction battery module stack assembly : Exploded view) :
  - the traction battery main relay with its bus bar between main fuse and main relay,

- the bus bar between main fuse and main relay electric connection nut using an insulated magnetic H10 socket,
- the bus bar between main fuse and main relay from the main relay.

4. REMOVE THE TRACTION BATTERY PRECHARGE RELAY

❑ Remove the traction battery internal junction box(see 19E, Traction battery, Traction battery module stack assembly : Exploded view) .

❑ Fit the traction battery internal junction box on an insulated carpet.

❑ Remove (see 19E, Traction battery, Traction battery module stack assembly : Exploded view) :

- the traction battery precharge relay nuts using an insulated magnetic H10 socket,
- the traction battery precharge relay.

Note:

Leave the traction battery precharge relay plugs in position. At the refitting, disconnect one plug at a time and connect it on the new precharge relay. Repeat this operation 4 times.

REFITTING

1. REFIT THE TRACTION BATTERY CHARGE RELAY

❑ Refit the traction battery charge relay(see 19E, Traction battery, Traction battery module stack assembly : Exploded view) .

Note:

The traction battery charge relay "+" terminal is on the right side.

❑

Refit the traction battery charge relay nuts using an insulated magnetic H10 socket(see 19E, Traction battery, Traction battery module stack assembly : Exploded view) .

❑

Torque tighten the traction battery charge relay nuts using an insulated magnetic H10 socket (see 19E, Traction battery, Traction battery module stack assembly : Exploded view) .

- Mark always the nuts with a paint markerof a color different from the original.
- Remove the insulation from the electric wire between charge fuse and charge relay.
- Fit the electric wire between charge fuse and charge relay.
- Refit the new charge relay positive electric connection nut using an insulated magnetic H7 socket (see 19E, Traction battery, Traction battery module stack assembly : Exploded view) .
- Torque tighten the charge relay positive electric connection nut using an insulated magnetic H7 socket (see 19E, Traction battery, Traction battery module stack assembly : Exploded view) .
- Mark always the nut with a paint markerof a color different from the original.
- Remove the insulation from the electric wire between charge relay and traction battery module stack.
- Fit the electric wire between charge relay and traction battery module stack.
- Refit the new charge relay negative electric connection nut using an insulated magnetic H7 socket (see 19E, Traction battery, Traction battery module stack assembly : Exploded view) .
- Torque tighten the charge relay negative electric connection nut using an insulated magnetic H7 socket (see 19E, Traction battery, Traction battery module stack assembly : Exploded view) .
- Mark always the nut with a paint markerof a color different from the original.
- Connect the charge relay plug.

2. REFIT THE TRACTION BATTERY MAIN RELAY

Refit (see 19E, Traction battery, Traction battery module stack assembly : Exploded view) :

- the bus bar between main fuse and main relay on the main relay,
- the bus bar between main fuse and main relay electric connection nut using an insulated magnetic H10 socket,
- the traction battery main relay with its bus bar between main fuse and main relay,
- the traction battery positive bus bar on the main relay,
- the traction battery positive bus bar electric connection nut using an insulated magnetic H10 socket,
- the traction battery positive bus bar electric connection screw using an insulated mangetic H8 socket.

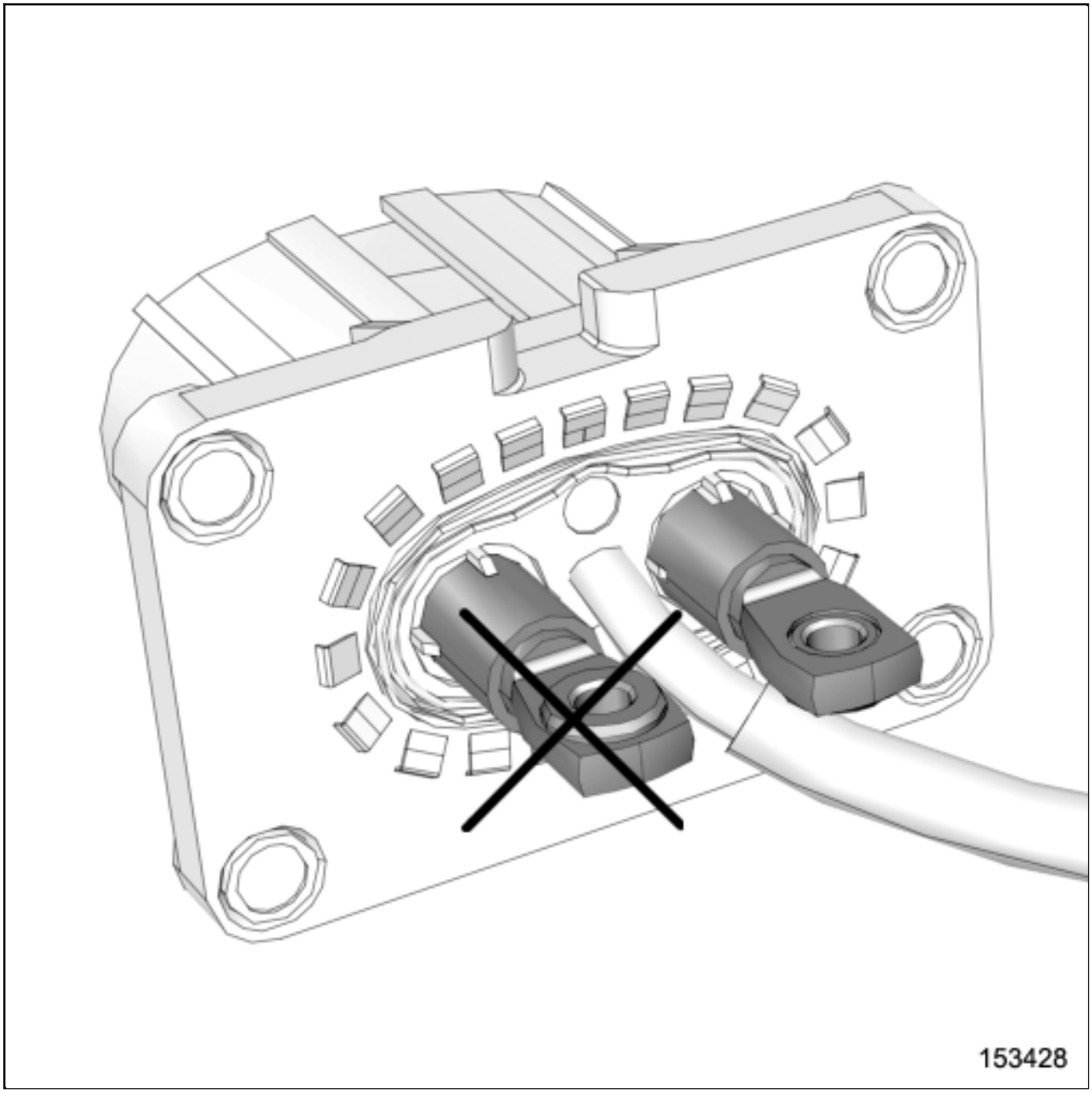

Note:

Pay attention to the orientation of the rods of the connector (flat faces on the top).

Pay attention to the position of the bus bar (no contact between bus bar and junction box).

Refit (see 19E, Traction battery, Traction battery module stack assembly : Exploded view) :

- the traction battery main relay upper nut using an insulated magnetic H10 socket,
- the traction battery main relay lower nut using an insulated magnetic H10 socket.

❑

Torque tighten the traction battery main relay upper nut using an insulated magnetic H10 socket (see 19E, Traction battery, Traction battery module stack assembly : Exploded view) .

❑

Mark always the nut with a paint markerof a color different from the original.

❑

Torque tighten the traction battery main relay lower nut using an insulated magnetic H10 socket (see 19E, Traction battery, Traction battery module stack assembly : Exploded view) .

❑

Mark always the nut with a paint markerof a color different from the original.

❑

Torque tighten the traction battery positive bus bar electric connection nut using an insulated magnetic H10 socket(see 19E, Traction battery, Traction battery module stack assembly : Exploded view) .

❑

Mark always the nut with a paint markerof a color different from the original.

❑

Torque tighten the bus bar between main fuse and main relay electric connection nut using an insulated magnetic H10 socket(see 19E, Traction battery, Traction battery module stack assembly : Exploded view) .

Note:

Keep the bus bar between main fuse and main relay in contact on the main fuse support.

❑

Mark always the nut with a paint markerof a color different from the original.

❑

Torque tighten the traction battery positive bus bar electric connection screw using an insulated mangetic H8 socket(see 19E, Traction battery, Traction battery module stack assembly : Exploded view) .

- Mark always the screw with a paint markerof a color different from the original.

- Remove the insulation from the traction battery internal junction box wiring lug.

- Fit the lug on the lower terminal of the traction battery main fuse support.

- Insulate the lower terminal of the main fuse.

- Connect the traction battery main relay plug.

- Clip:
  - the clip of the precharge relay wiring,
  - the traction battery internal junction box wiring clamp,
  - the clips of the traction battery internal junction box wiring.

- Refit the traction battery main fuse(see 19E, Traction battery, Traction battery module stack assembly : Exploded view) .

3. REFIT THE TRACTION BATTERY PRECHARGE RELAY

- Refit (see 19E, Traction battery, Traction battery module stack assembly : Exploded view) :
  - the traction battery precharge relay,
  - the traction battery precharge relay nuts using an insulated magnetic H10 socket.

❑

Torque tighten the traction battery precharge relay nuts using an insulated magnetic H10 socket (see 19E, Traction battery, Traction battery module stack assembly : Exploded view) .

❑

Mark always the nuts with a paint markerof a color different from the original.

❑

Connect the traction battery precharge relay plugs.

Note:

Disconnect one plug at a time and connect it on the new precharge relay. Repeat this operation 4 times.

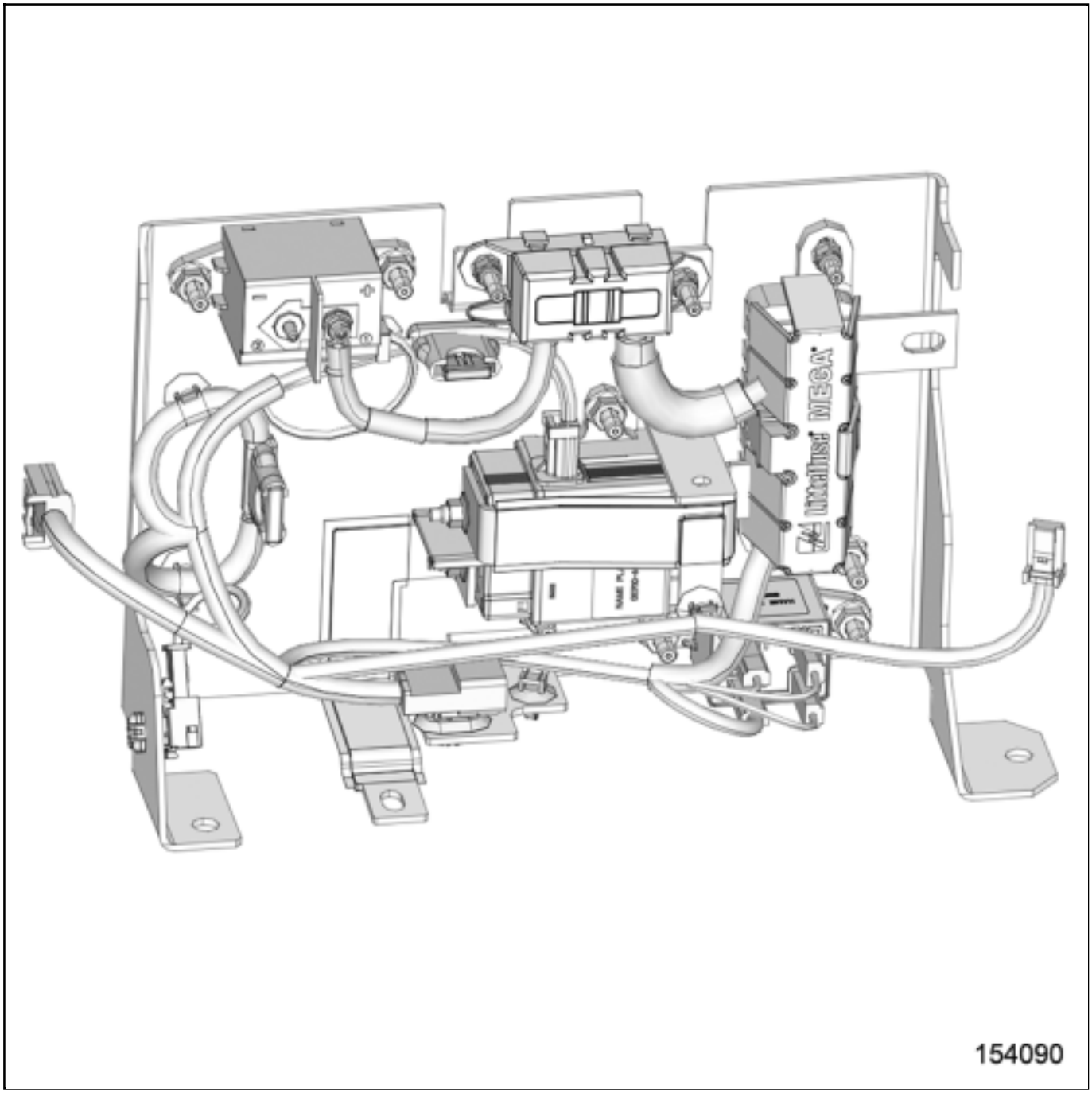

❑

Make a check of the traction battery internal junction box.

❑

Refit the traction battery internal junction box(see 19E, Traction battery, Traction battery module stack assembly : Exploded view) .

4. FINAL OPERATION

❑

Proceed in the reverse order to removal.

Repair-14x02x01x30-01x37-1-1-1.xml

XSL version : 3.02 du 22/07/11

TRACTION BATTERY LOW VOLTAGE CONNECTOR : REMOVAL - REFITTING

Note, one or more warnings are present in this procedure

Special tooling required	
Set of trim removal levers.	Car. 1363

Locations and specifications (tightening torques, parts always to be replaced, etc.)(see 19E, Traction battery, Traction battery housing assembly : Exploded view) .

WARNING

To avoid all risk of damage to the systems, apply the safety and cleanliness instructions and operation recommendations before carrying out any repair:

(see 19E, Traction battery, Traction battery : Precautions for the repair) ,

Vehicle: Precautions for the repair .

WARNING

DANGER: HIGH VOLTAGE VEHICLE.

Risks of serious burns or electric shock that may prove fatal.

Before carrying out any work on the vehicle, it is essential that you adhere to the instructions regarding vehicle voltage cut-off. This work must be carried out by an employee who is qualified and authorized to work on a high-voltage onboard network.

REMOVAL

1. REMOVAL PREPARATION OPERATION

Remove the traction battery upper cover(see 19E, Traction battery, Traction battery housing assembly :

Exploded view) .

2. REMOVAL OPERATION

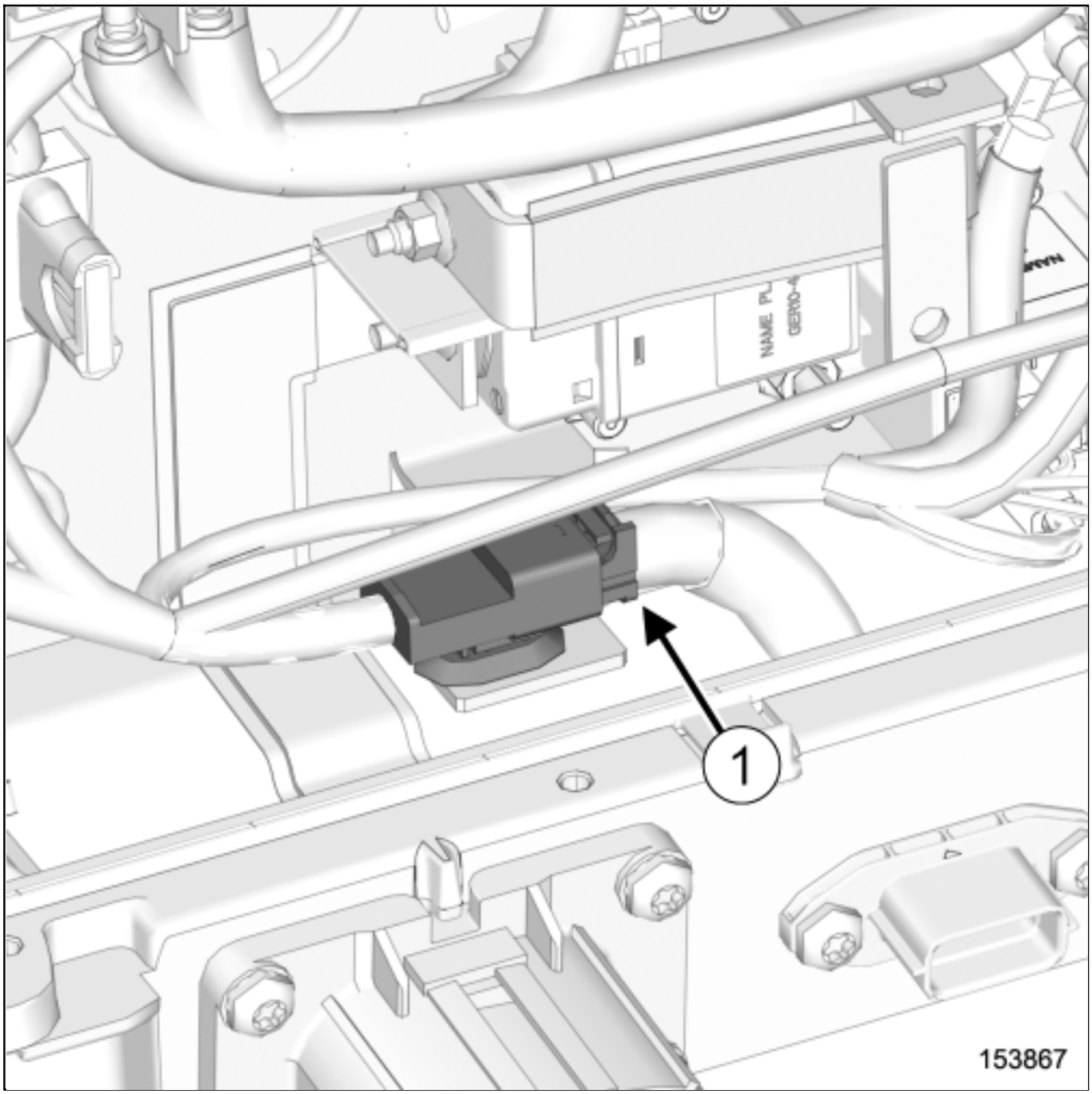

❑

Disconnect the traction battery low voltage connector plug(1) using the toolSet of trim removal levers. (Car. 1363) .

❑

Remove (see 19E, Traction battery, Traction battery housing assembly : Exploded view) :

■

- the traction battery low voltage connector screws using an insulated magnetic T30 socket,

the traction battery low voltage connector.

> Note:
>
> Pay attention to the wiring.

REFITTING

1. REFITTING PREPARATION OPERATION

- Clean the faces:
  - around the connector hole on the traction battery lower cover using the brake cleanerand lint-free cloth Vehicle: Parts and consumables for the repair ,
  - on the low voltage connector socket using the lint-free clothVehicle: Parts and consumables for the repair .

2. REFITTING OPERATION

- Refit the traction battery low voltage connector(see 19E, Traction battery, Traction battery housing assembly : Exploded view) .

> Note:
>
> Pay attention to the wiring.
>
> Beware of not pinching the sealing

- Refit the traction battery low voltage connector screws using an insulated magnetic T30 socket (see 19E, Traction battery, Traction battery housing assembly : Exploded view) .

❑

Torque tighten the traction battery low voltage connector screws using an insulated magnetic T30 socket (see 19E, Traction battery, Traction battery housing assembly : Exploded view) .

> Note:
>
> Make sure the low voltage connector socket is perfectly in place on the lower cover.

❑

Mark the screws with a paint markerof a color different of the original.

❑

Proceed in reverse order to removal.

TRACTION BATTERY LOWER COVER : REMOVAL - REFITTING

Note, one or more warnings are present in this procedure

Special tooling required	
Set of trim removal levers.	Car. 1363

Locations and specifications (tightening torques, parts always to be replaced, etc.)(see 19E, Traction battery, Traction battery housing assembly : Exploded view) .

WARNING

To avoid all risk of damage to the systems, apply the safety and cleanliness instructions and operation recommendations before carrying out any repair:

(see 19E, Traction battery, Traction battery : Precautions for the repair) ,

Vehicle: Precautions for the repair .

WARNING

DANGER: HIGH VOLTAGE VEHICLE.

Risks of serious burns or electric shock that may prove fatal.

Before carrying out any work on the vehicle, it is essential that you adhere to the instructions regarding vehicle voltage cut-off. This work must be carried out by an employee who is qualified and authorized to work on a high-voltage onboard network.

REMOVAL

1. REMOVAL PREPARATION OPERATION

Remove:

the traction battery upper cover(see 19E, Traction battery, Traction battery housing assembly : Exploded view) ,

the traction battery module semi-rigid connection plate(see 19E, Traction battery, Traction battery module stack assembly : Exploded view) ,

the traction battery internal low voltage wiring(see 19E, Traction battery, Traction battery module stack assembly : Exploded view) ,

the traction battery computer(see 19E, Traction battery, Traction battery module stack assembly : Exploded view) ,

the traction battery internal junction box(see 19E, Traction battery, Traction battery module stack assembly : Exploded view) ,

the 7 traction battery modules(see 19E, Traction battery, Traction battery module stack assembly : Exploded view) ,

the high voltage connector between charger and traction battery(see 19E, Traction battery, Traction battery housing assembly : Exploded view) ,

the high voltage connector between converter and traction battery(see 19E, Traction battery, Traction battery housing assembly : Exploded view) ,

the traction battery low voltage connector(see 19E, Traction battery, Traction battery housing assembly : Exploded view) .

Unclip the protective cover of the "+" terminal using the toolSet of trim removal levers.(Car. 1363) .

Move the "+" high voltage charger wire from the "+" terminal.

Remove (see 19E, Traction battery, Traction battery module stack assembly : Exploded view) :

the traction battery internal positive terminal screw using an insulated magnetic H10 socket,

the traction battery internal positive terminal,

- the traction battery module stack front end plate screws using an insulated magnetic H13 socket,

  the traction battery module stack front end plate.

2. REMOVAL OPERATION

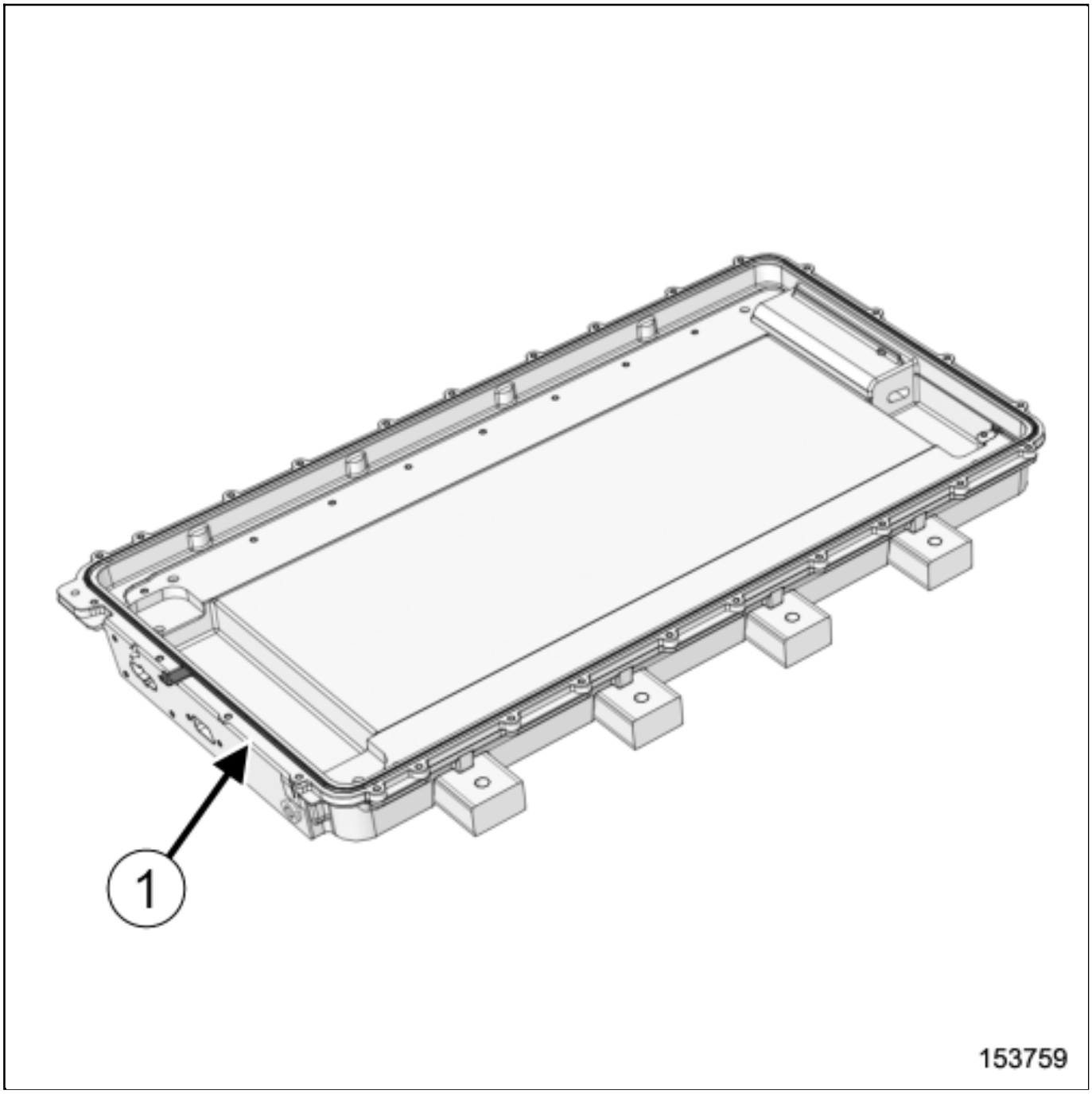

Remove (see 19E, Traction battery, Traction battery housing assembly : Exploded view) :

- the seal between traction battery lower and upper cover(1) ,

- the crossmember screws from the traction battery lower cover using an insulated magnetic T40 socket,
- the 4 crossmembers from the traction battery lower cover.

1- ONLY FOR BATTERY WITH AIR LEAK SCREW

❑

Remove the air leak screw(see 19E, Traction battery, Traction battery housing assembly : Exploded view) using the drain plug spanner.

REFITTING

1. REFITTING OPERATION

❑

Refit (see 19E, Traction battery, Traction battery housing assembly : Exploded view) :

- the safety label on the traction battery lower cover,
- the 4 crossmembers on the traction battery lower cover,
- the crossmember screws on the traction battery lower cover using an insulated magnetic T40 socket.

❑

Torque tighten the crossmember screws on the traction battery lower cover using an insulated magnetic T40 socket(see 19E, Traction battery, Traction battery housing assembly : Exploded view) .

❑

Mark always screws with a paint markerof a color different from the original.

❑

Refit the seal between traction battery lower and upper cover(see 19E, Traction battery, Traction battery housing assembly : Exploded view) .

❑

Refit (see 19E, Traction battery, Traction battery module stack assembly : Exploded view) :

- the traction battery module stack front end plate,
- the traction battery module stack front end plate screws using an insulated magnetic H13 socket.

Torque tighten the traction battery module stack front end plate screws using an insulated magnetic H13 socket(see 19E, Traction battery, Traction battery module stack assembly : Exploded view) .

Mark always the screws with a paint markerof a color different from the original.

Refit (see 19E, Traction battery, Traction battery module stack assembly : Exploded view) :

- the traction battery internal positive terminal,
- the traction battery internal positive terminal screw using an insulated magnetic H10 socket.

Torque tighten the traction battery internal positive terminal screw using an insulated magnetic H10 socket(see 19E, Traction battery, Traction battery module stack assembly : Exploded view) .

Mark always the screw with a paint markerof a color different from the original.

Proceed in the reverse order to removal.

TRACTION BATTERY MODULE SEMI-RIGID CONNECTION PLATE : REMOVAL - REFITTING

Note, one or more warnings are present in this procedure

Special tooling required	
Set of trim removal levers.	Car. 1363

Locations and specifications (tightening torques, parts always to be replaced, etc.)(see 19E, Traction battery, Traction battery module stack assembly : Exploded view) .

WARNING

To avoid all risk of damage to the systems, apply the safety and cleanliness instructions and operation recommendations before carrying out any repair:

(see 19E, Traction battery, Traction battery : Precautions for the repair) ,

Vehicle: Precautions for the repair .

WARNING

DANGER: HIGH VOLTAGE VEHICLE.

Risks of serious burns or electric shock that may prove fatal.

Before carrying out any work on the vehicle, it is essential that you adhere to the instructions regarding vehicle voltage cut-off. This work must be carried out by an employee who is qualified and authorized to work on a high-voltage onboard network.

REMOVAL

1. REMOVAL PREPARATION OPERATION

❑

Remove the traction battery upper cover(see 19E, Traction battery, Traction battery housing assembly : Exploded view) .

2. REMOVAL OPERATION

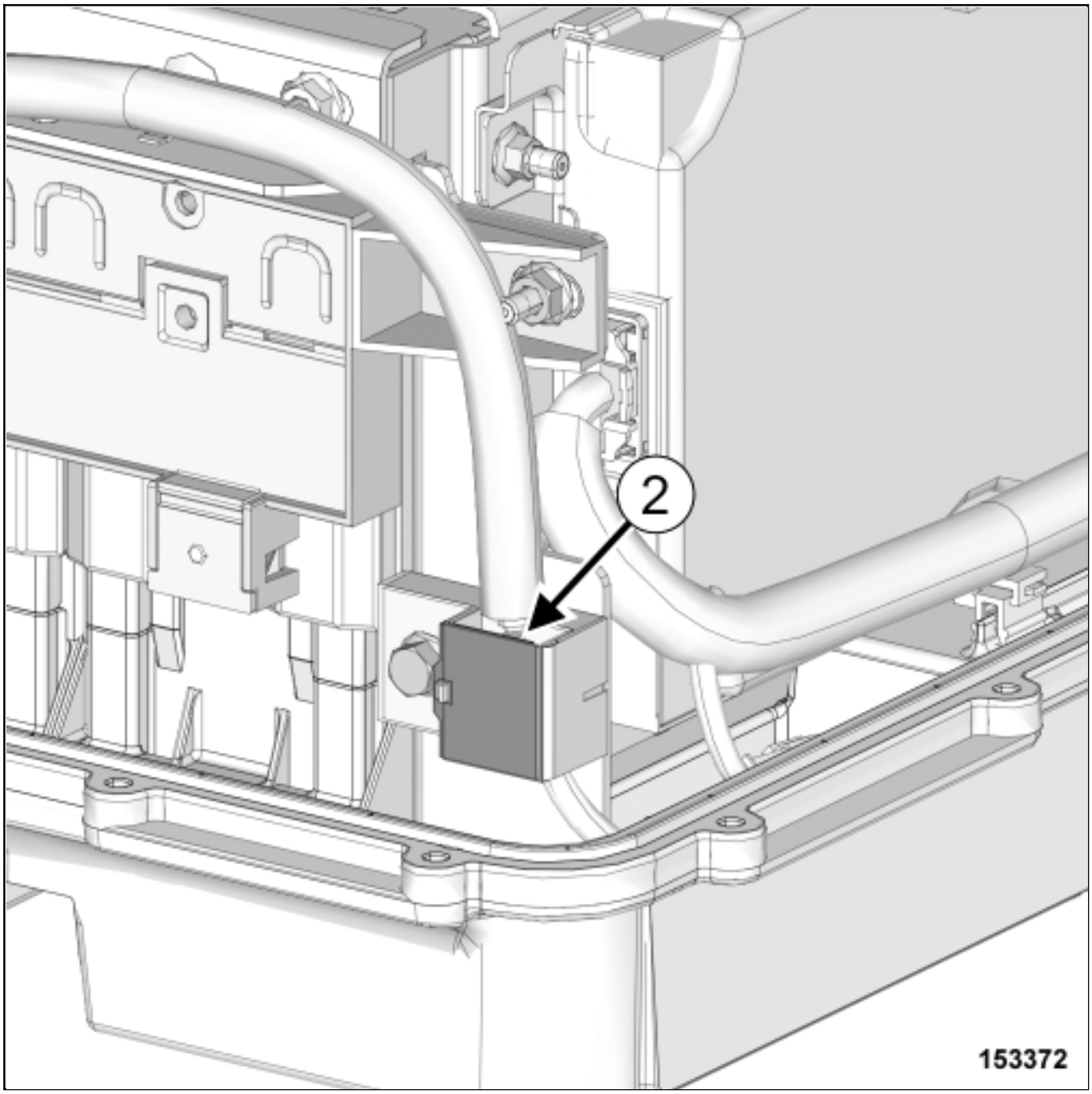

❑

Unclip the protective cover(2) of the "+" terminal using the toolSet of trim removal levers.(Car. 1363) .

Remove the traction battery internal positive terminal electric connection nut using an insulated magnetic H10 socket(see 19E, Traction battery, Traction battery module stack assembly : Exploded view) .

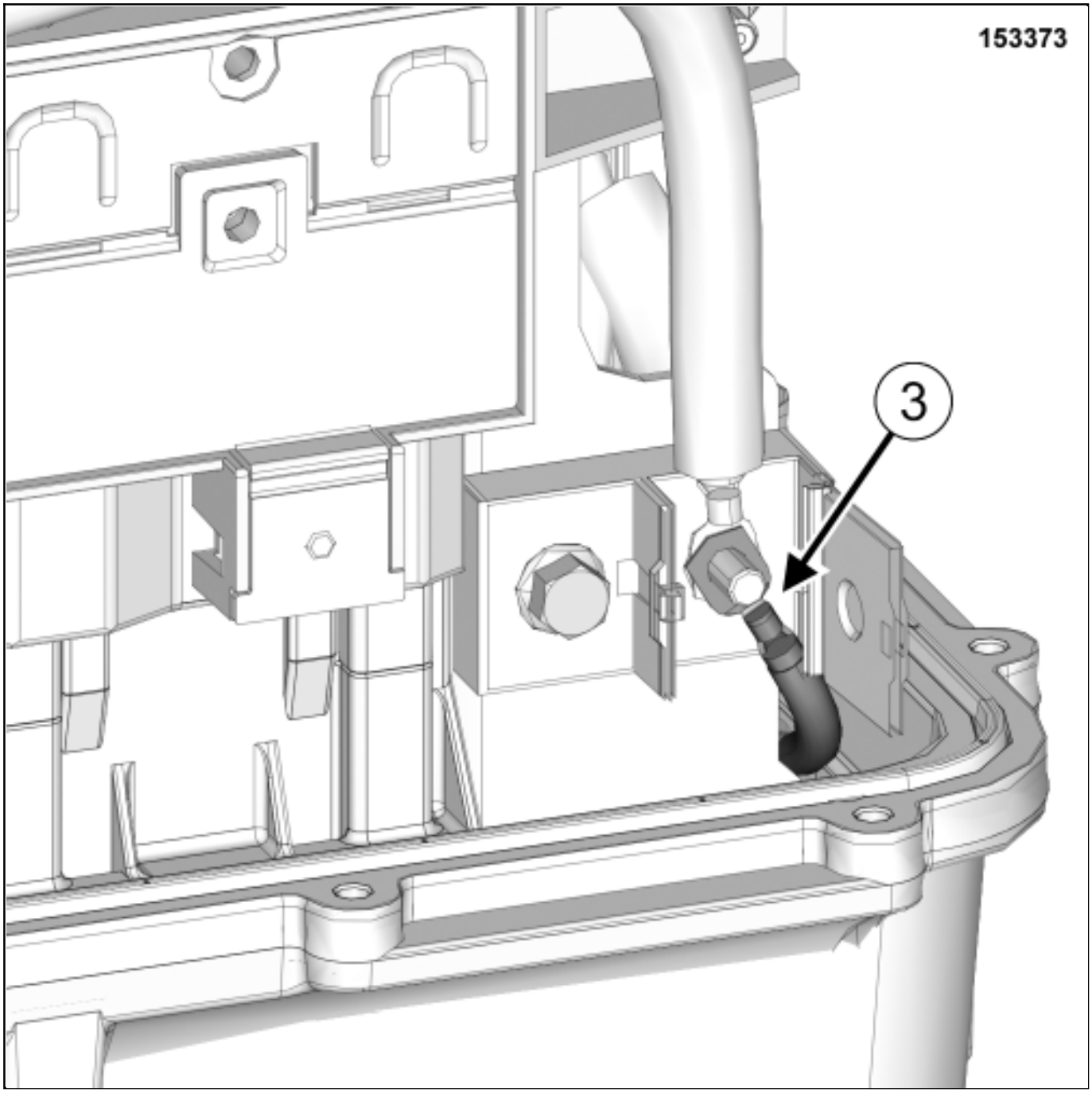

Move the "+" high voltage charger wire(3) from the "+" terminal.

Insulate the "+" high voltage charger wire.

Clip the protective cover of the "+" terminal.

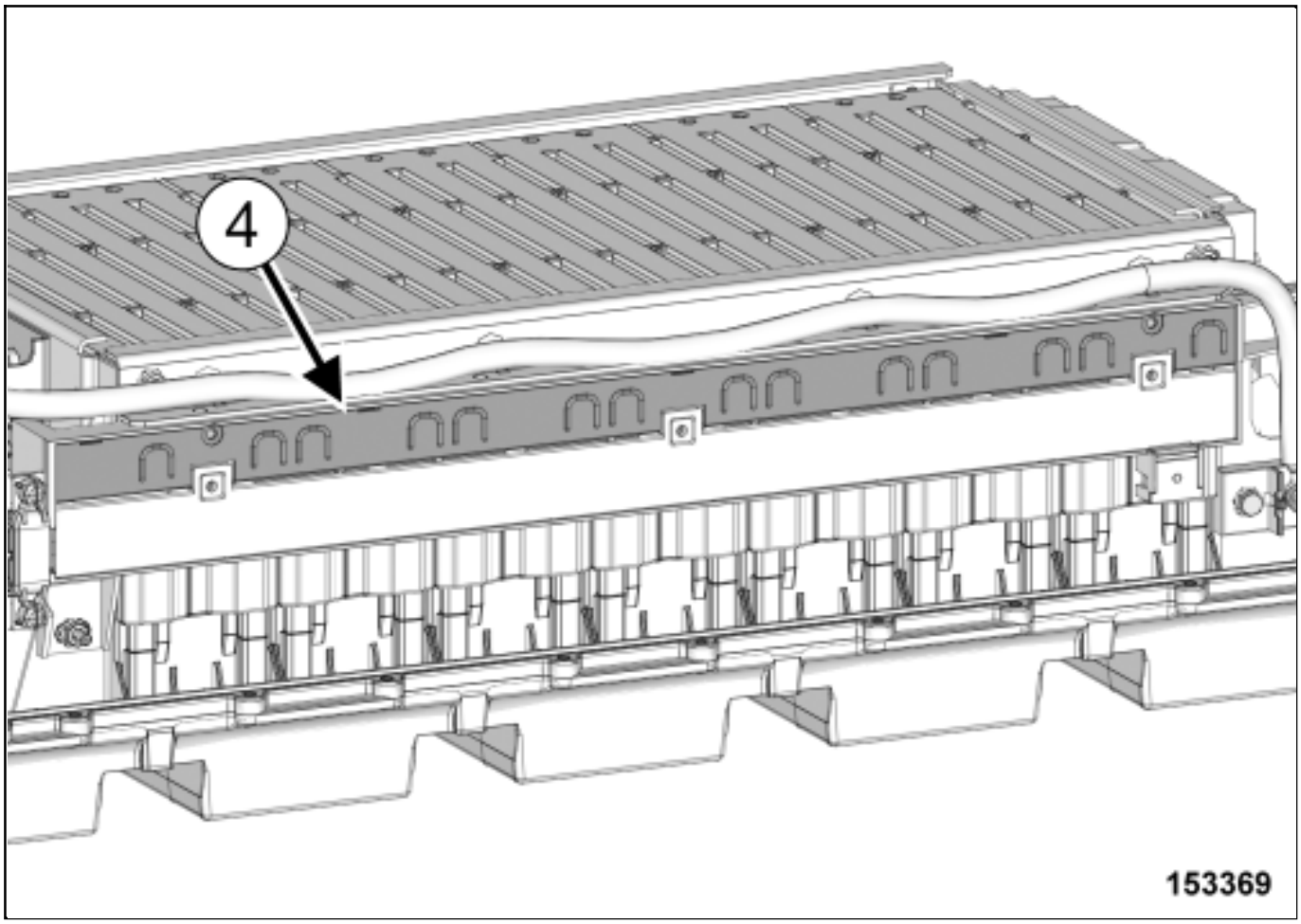

Unclip the protective cover(4) from the traction battery module semi-rigid connection plate using the toolSet of trim removal levers.(Car. 1363) beginning with the left side.

Remove (see 19E, Traction battery, Traction battery module stack assembly : Exploded view) :

- the 13 electric connection nuts of the traction battery module semi-rigid connection plate using an insulated magnetic H10 socket,
- the traction battery module semi-rigid connection plate nuts using an insulated magnetic H10 socket beginning with the left side,
- the traction battery module semi-rigid connection plate.

Note:

Pay attention to the risk of short-circuit between the teminals of the traction battery module semi-rigid connection plate.

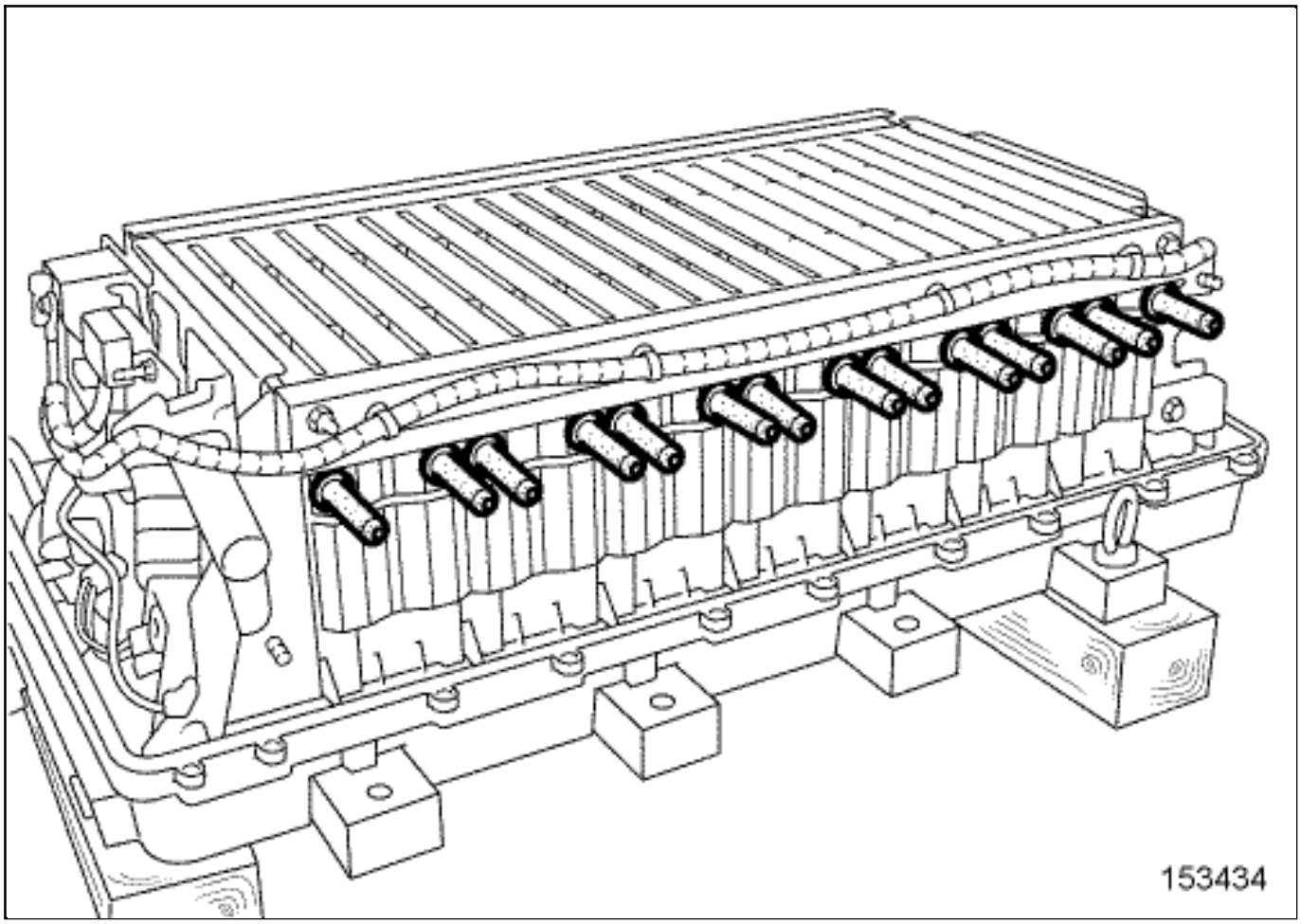

- Fit the 14 modules terminal covers.

REFITTING

1. REFITTING PREPARATION OPERATION

Note:

Check the state of the bar plugs and modules terminals (no black marks, no corrosion, no trace of electrolusis, no tapping damages, no deformation of the contacts, no sign of breakage, or cracking on the plastic endings).

Replace it in case of damage and analyse the origin.

2. REFITTING OPERATION

❑

Remove the 14 modules terminal covers.

❑

Refit (see 19E, Traction battery, Traction battery module stack assembly : Exploded view) :

- the traction battery module semi-rigid connection plate in gauge on the traction battery internal safety lockout tool,
- the 13 electric connection nuts of the traction battery module semi-rigid connection plate using an insulated magnetic H10 socket.

❑

Torque tighten the 13 electric connection nuts of the traction battery module semi-rigid connection plate using an insulated magnetic H10 socket(see 19E, Traction battery, Traction battery module stack assembly : Exploded view) .

❑

Mark always nuts with a paint markerof a color different from the original.

❑

Clip the protective cover on the traction battery module semi-rigid connection plate.

❑

Refit the traction battery module semi-rigid connection plate nuts using an insulated magnetic H10 socket beginning with the right side(see 19E, Traction battery, Traction battery module stack assembly : Exploded view) .

❑

Torque tighten the traction battery module semi-rigid connection plate nuts using an insulated magnetic H10 socket(see 19E, Traction battery, Traction battery module stack assembly : Exploded view) .

- Mark always nuts with a paint markerof a color different from the original.

- Unclip the protective cover of the "+" terminal using the toolSet of trim removal levers.(Car. 1363) .

- Remove the insulation protection from the "+" high voltage charger wire.

- Fit the "+" high voltage charger wire on the "+" terminal.

- Refit the traction battery internal positive terminal electric connection nut using an insulated magnetic H10 socket(see 19E, Traction battery, Traction battery module stack assembly : Exploded view) .

- Torque tighten the traction battery internal positive terminal electric connection nut using an insulated magnetic H10 socket(see 19E, Traction battery, Traction battery module stack assembly : Exploded view) .

- Mark always nut with a paint markerof a color different from the original.

- Clip the protective cover of the "+" terminal from the high voltage charger wire on the traction battery module semi-rigid connection plate.

- Proceed in the reverse order to removal.

TRACTION BATTERY MODULE : REMOVAL - REFITTING

Note, one or more warnings are present in this procedure

Equipment required
multimeter

Locations and specifications (tightening torques, parts always to be replaced, etc.)(see 19E, Traction battery, Traction battery module stack assembly : Exploded view) .

WARNING

To avoid all risk of damage to the systems, apply the safety and cleanliness instructions and operation recommendations before carrying out any repair:

- (see 19E, Traction battery, Traction battery : Precautions for the repair) ,
- Vehicle: Precautions for the repair .

WARNING

DANGER: HIGH VOLTAGE VEHICLE.

Risks of serious burns or electric shock that may prove fatal.

Before carrying out any work on the vehicle, it is essential that you adhere to the instructions regarding vehicle voltage cut-off. This work must be carried out by an employee who is qualified and authorized to work on a high-voltage onboard network.

REMOVAL

1. REMOVAL PREPARATION OPERATION

Remove:

- the traction battery upper cover(see 19E, Traction battery, Traction battery housing assembly : Exploded view) ,
- the traction battery module semi-rigid connection plate(see 19E, Traction battery, Traction battery module stack assembly : Exploded view) ,
- the traction battery internal low voltage wiring(see 19E, Traction battery, Traction battery module stack

assembly : Exploded view) ,

- the traction battery computer(see 19E, Traction battery, Traction battery module stack assembly : Exploded view) ,
- the traction battery internal junction box(see 19E, Traction battery, Traction battery module stack assembly : Exploded view) ,
- the traction battery negative bus bar(see 19E, Traction battery, Traction battery module stack assembly : Exploded view) ,
- the insulation from the traction battery module electric connections of the module to be replaced.

2. REMOVAL OPERATION

- Measure the voltage on the "+" and "-" terminals of the module to be replaced using the multimeter.

Note:

The touch points of the multimeter must be in contact with the terminals "+" and "-" of the module.

- Insulate the traction battery module electric connection of the module to be replaced.

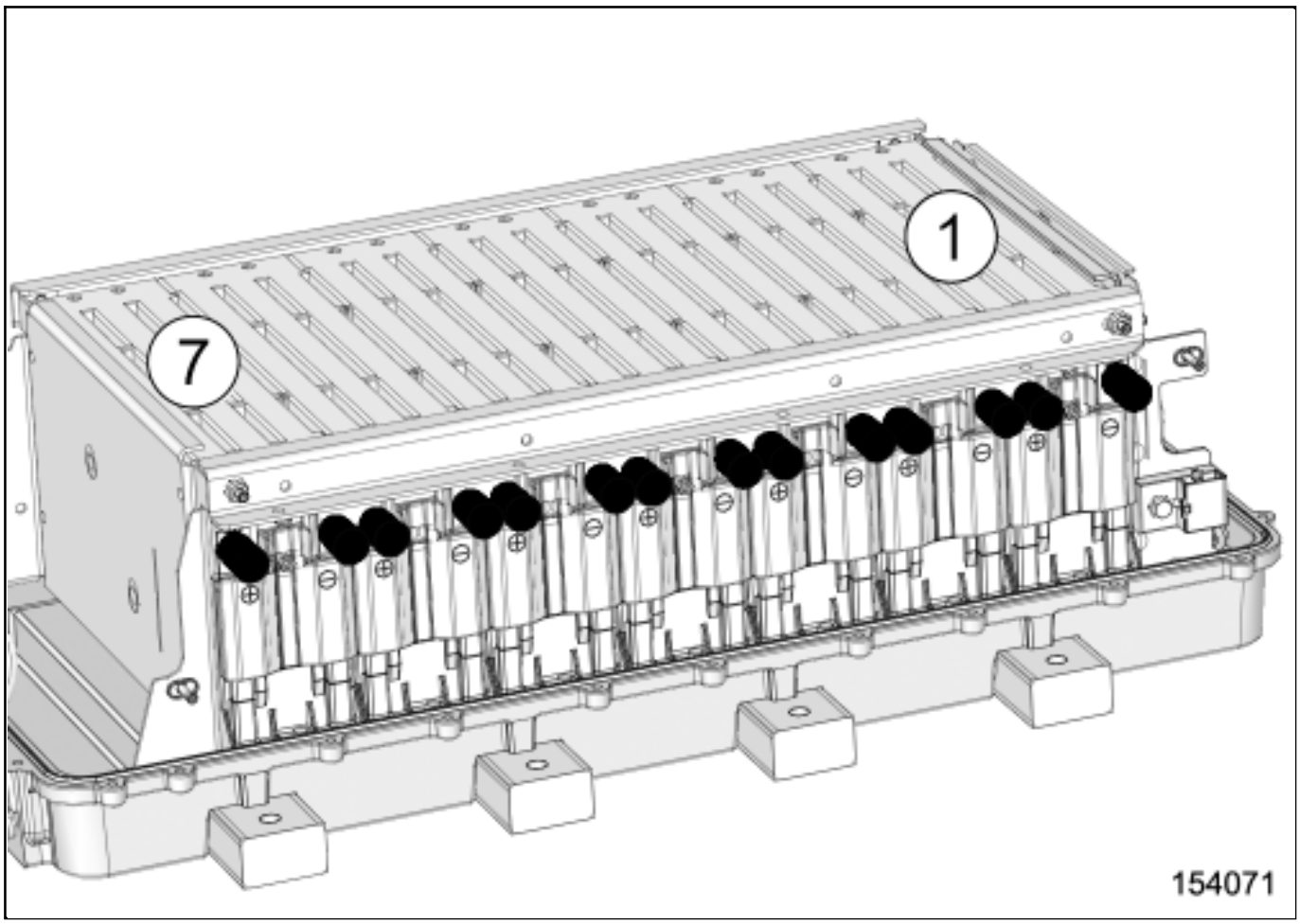

- Mark with a paint marker:
  - the number of modules (module number 1 side computer),
  - the module to be replaced.

- Remove (see 19E, Traction battery, Traction battery module stack assembly : Exploded view) :
  - the traction battery module stack left transverse bar nuts using an insulated magnetic H10 socket,
  - the traction battery module stack left transverse bar,
  - the traction battery module stack right transverse bar nuts using an insulated magnetic H10 socket,
  - the traction battery module stack right transverse bar,
  - the traction battery module stack rear end plate screws using an insulated magnetic H13 socket,
  - the traction battery module stack rear end plate.

- Loosen the traction battery module screws using an insulated magnetic H8 socket(see 19E, Traction battery, Traction battery module stack assembly : Exploded view) .

- Remove (see 19E, Traction battery, Traction battery module stack assembly : Exploded view) :
  - the traction battery module screws using an insulated magnetic H8 socket,
  - the 7 traction battery modules.

- Fit the modules on the insulated cover.

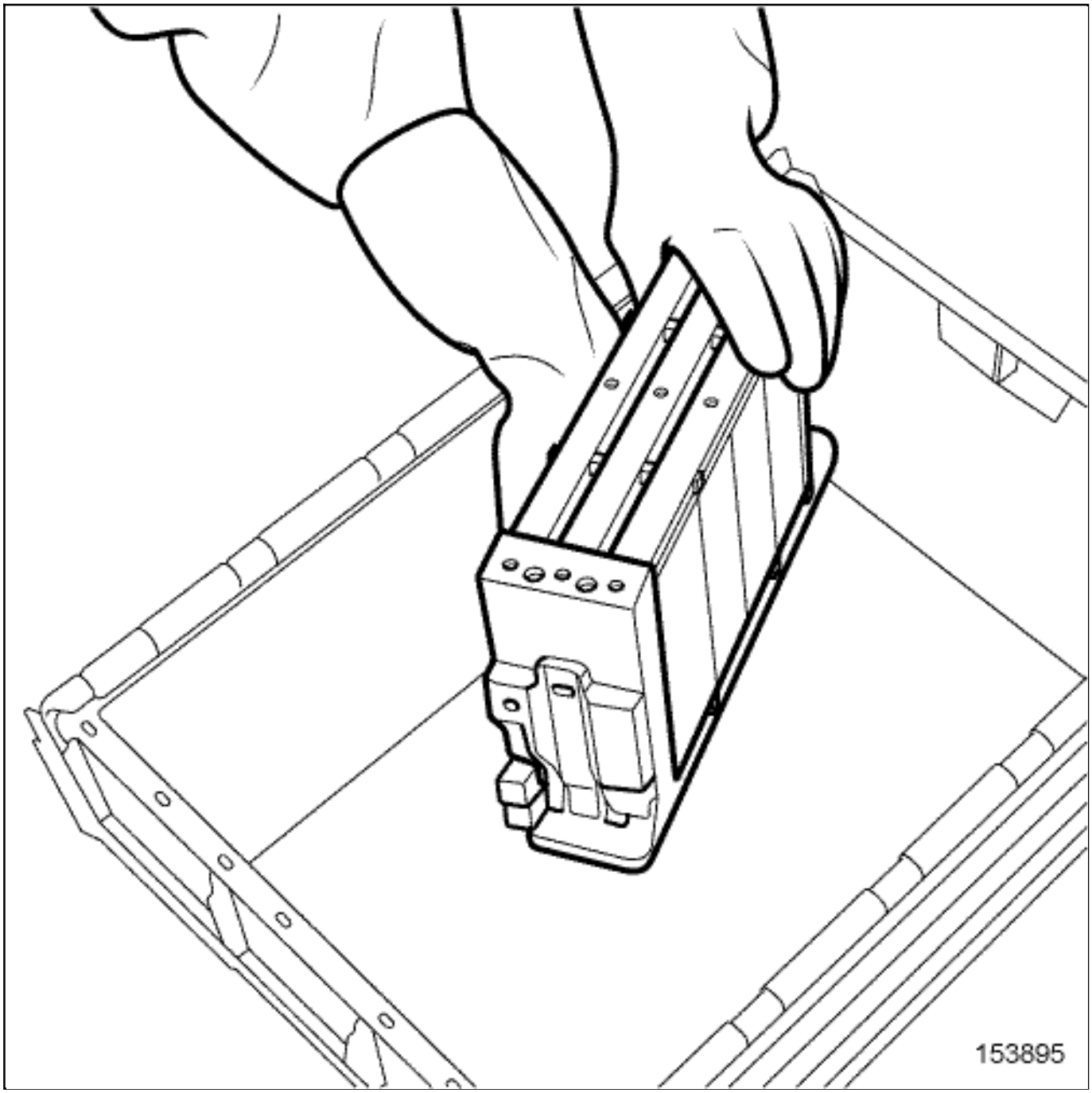

- Fit the modules to be replaced in the recycling bin.

- Record the serial number of the new module.

> Note:
>
> This record is mandatory for the traceability of modules (battery world database).

REFITTING

1. REFITTING PREPARATION OPERATION

- Clean the bottom of the traction battery lower cover and the bearing surface of the seal between upper and lower cover using the vacuum cleaner equipped with a plastic nozzle.

- Equalize the voltage of the new module to the target voltage value diagnosed.

Note:

Voltage equalization could last many hours, so anticipate voltage equalization as much as possible.

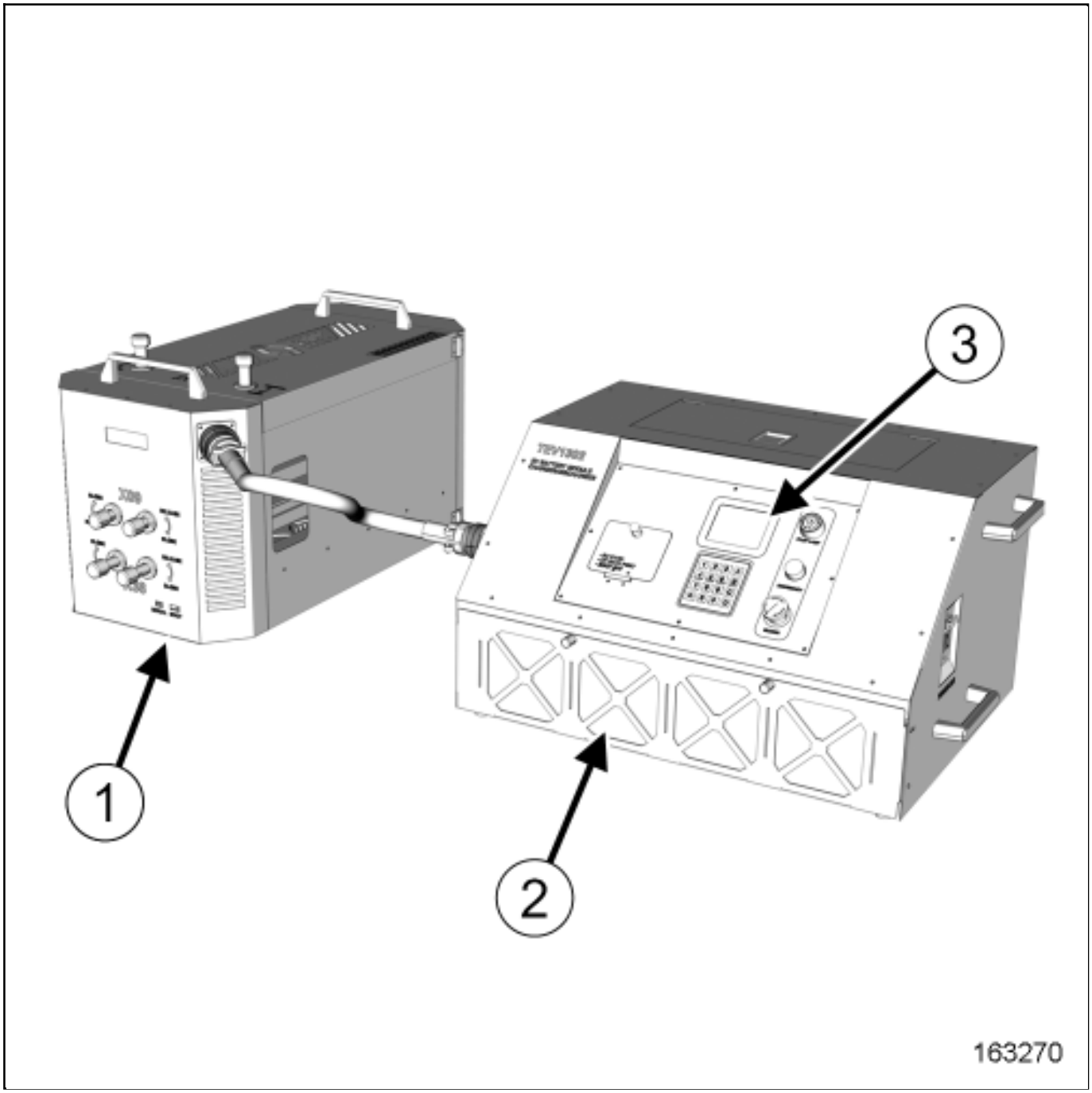

- Position the Electric Vehicle module charger / discharger tool on the working table.

- Set up the cradle(1) and the main box(3) .

> Note:
>
> Refer to the user's manual for the detail tool set up process.

- Remove one module, which is well-balanced, from the traction battery assembly.

> Note:
>
> Find and determine the well-balanced module using diagnostic tool.

- Insert the well-balanced module into the cradle(1) .
- Measure the module's total voltage using the main box(2) .
- Write down the measured module's total voltage, shown on the display(3) of the main box(2) .
- Remove the well-balanced module from the cradle(1) .
- Refit the well-balanced module back to the original position of the traction battery assembly.
- Insert the new module, which needs voltage balancing, into the cradle(1) .
- Set the target voltage which was measured with the well-balanced module.
- Charge or discharge the new module.

Note:

Do not set the target voltage reference by diagnostic tool or other measuring tool.

Measured voltage in diagnostic tool (or other) and charger / discharger tool's main box can be slightly different by calibration issue.

The method described above is to minimize the voltage calibration issue by setting up the target voltage using well-balanced module as reference.

Note:

Charging or discharging protocol is automatically processed by the Electric Vehicle module charger / discharger tool to the target voltage.

Refer to the user's manual of the tool for detail usage.

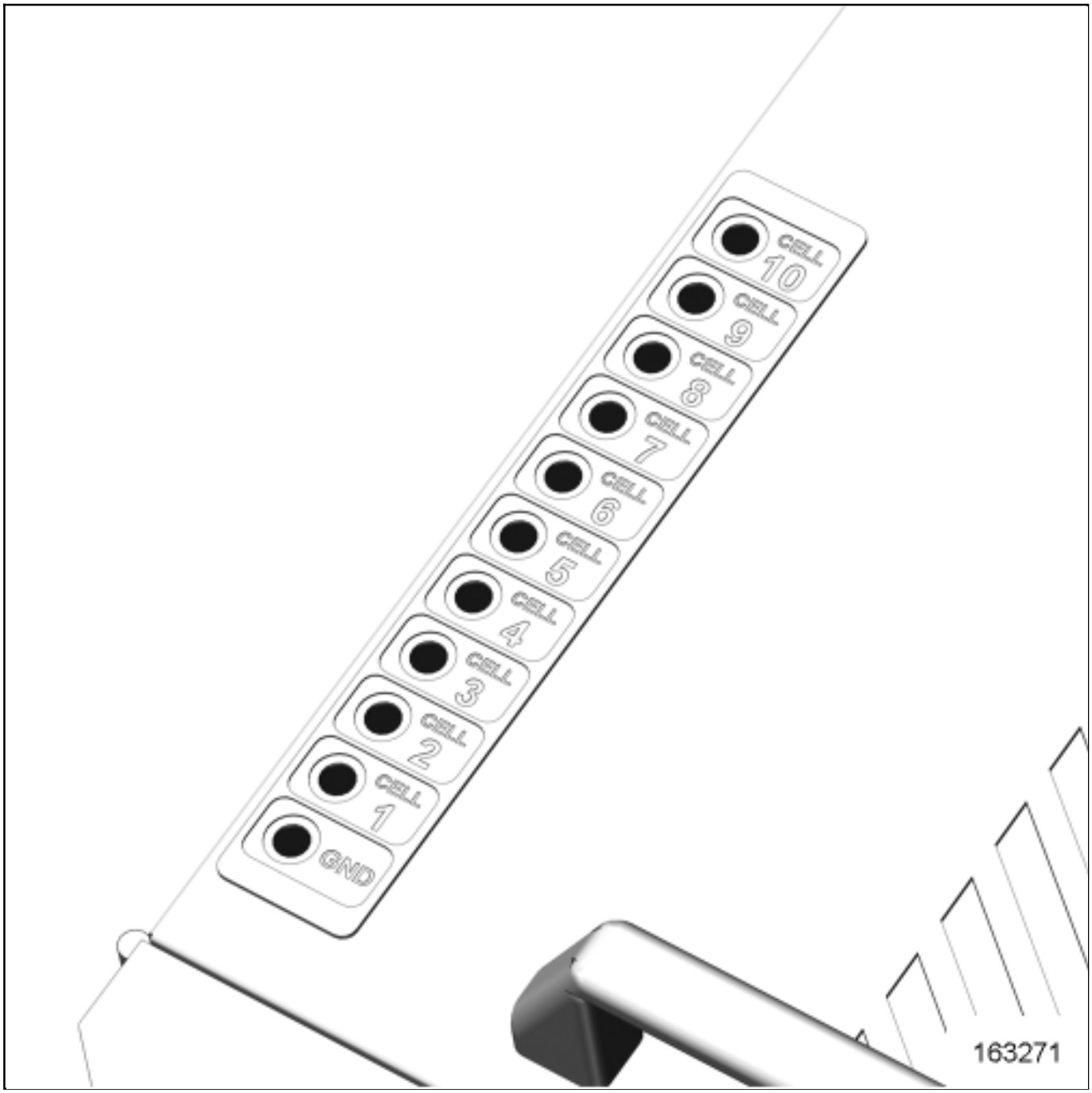
CELL 10
CELL 9
CELL 8
CELL 7
CELL 6
CELL 5
CELL 4
CELL 3
CELL 2
CELL 1
GND
163271

Note:

During charging or discharging set up process, main box display(3) shows cell voltage status. If the new module's maximum voltage deviation between each cell is more than 50mV, check again with a manual tool to confirm.

Manually measure each cell's voltage on the ports of the cradle(1) .

Cell 1 : between GND – CELL 1

Cell 2 : between CELL 1 – CELL 2

If the deviation (find MAX. and MIN. voltages and subtract MIN. from MAX.) exceeds more than 50mV,use another new module. 50mV is maximum tolerance cell deviation voltage of a brand new module.

Note:

During cell voltage deviation checking, ABSOLUTEvalues of voltage can be different between the manual tool and the main box display(3) by voltage calibration issue.

Check RELATIVEcell voltage deviation only.

Note:

Make sure that the manual tool (voltage meter) is in VOLTAGE MEASURING MODE (V) .

Current (Ampere)or other mode may cause short-circuit inside the module.

Make sure that the manual tool's probes are securely insulated from each other during measurement.

Do not put any other materials (pins, probe extensions...) inside the ports.

Keep the ports clean and unplugged except specific cell voltage deviation confirming process.

2. REFITTING OPERATION

- Measure the voltage on the "+" and "-" terminals of the new module using the multimeter.

> Note:
>
> The touch points of the multimeter must be in contact with the terminals "+" and "-" of the module.

- Insulate the traction battery module electric connections of the new module.

- Tape the wiring of the connectors on the lower cover.

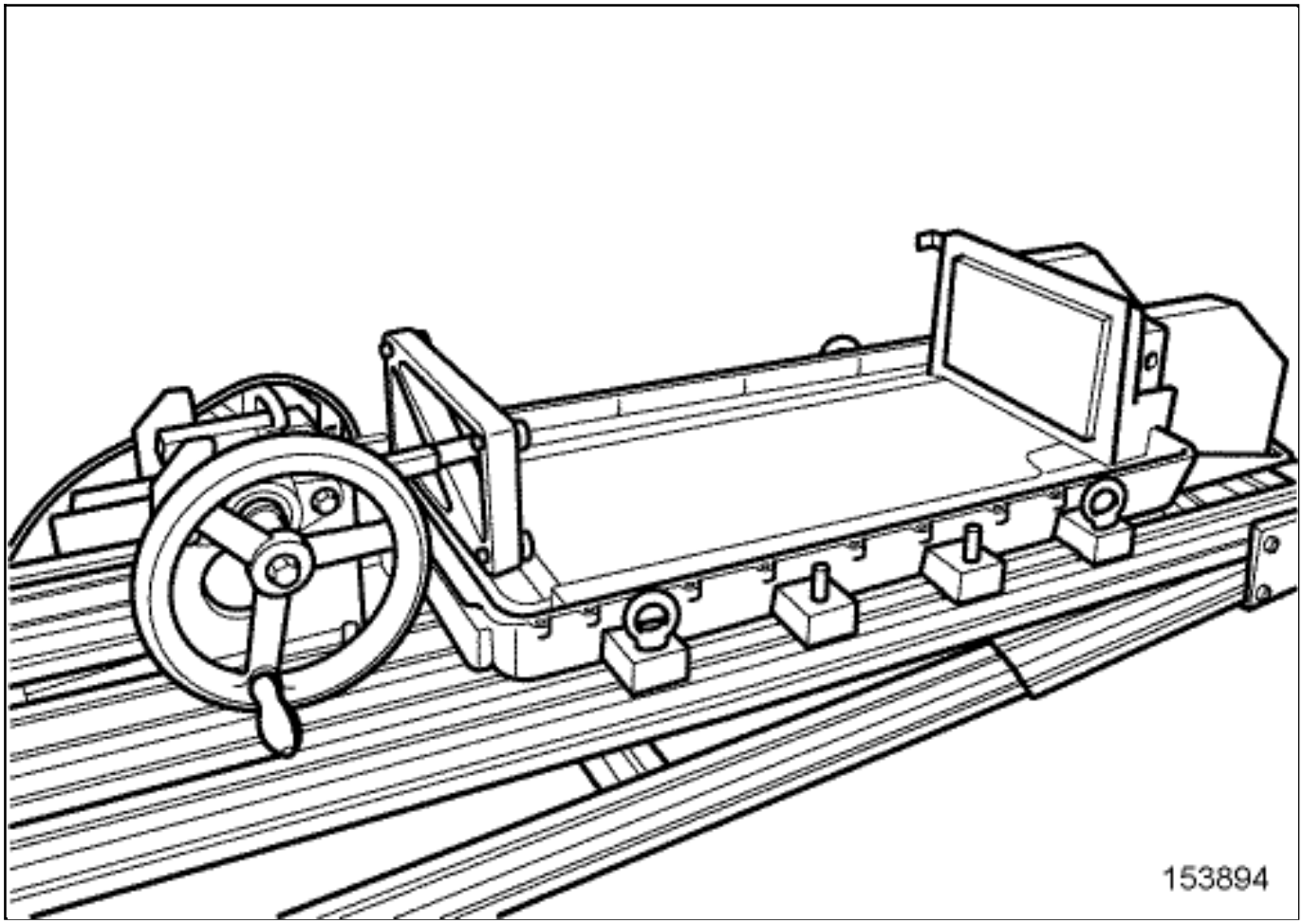

-

Fit the traction battery lower cover on the compressor tool.

❑

Refit the 7 traction battery modules(see 19E, Traction battery, Traction battery module stack assembly : Exploded view) .

Note:

Place the modules against the end plate.

❑

Refit the traction battery module stack rear end plate(see 19E, Traction battery, Traction battery module stack assembly : Exploded view) .

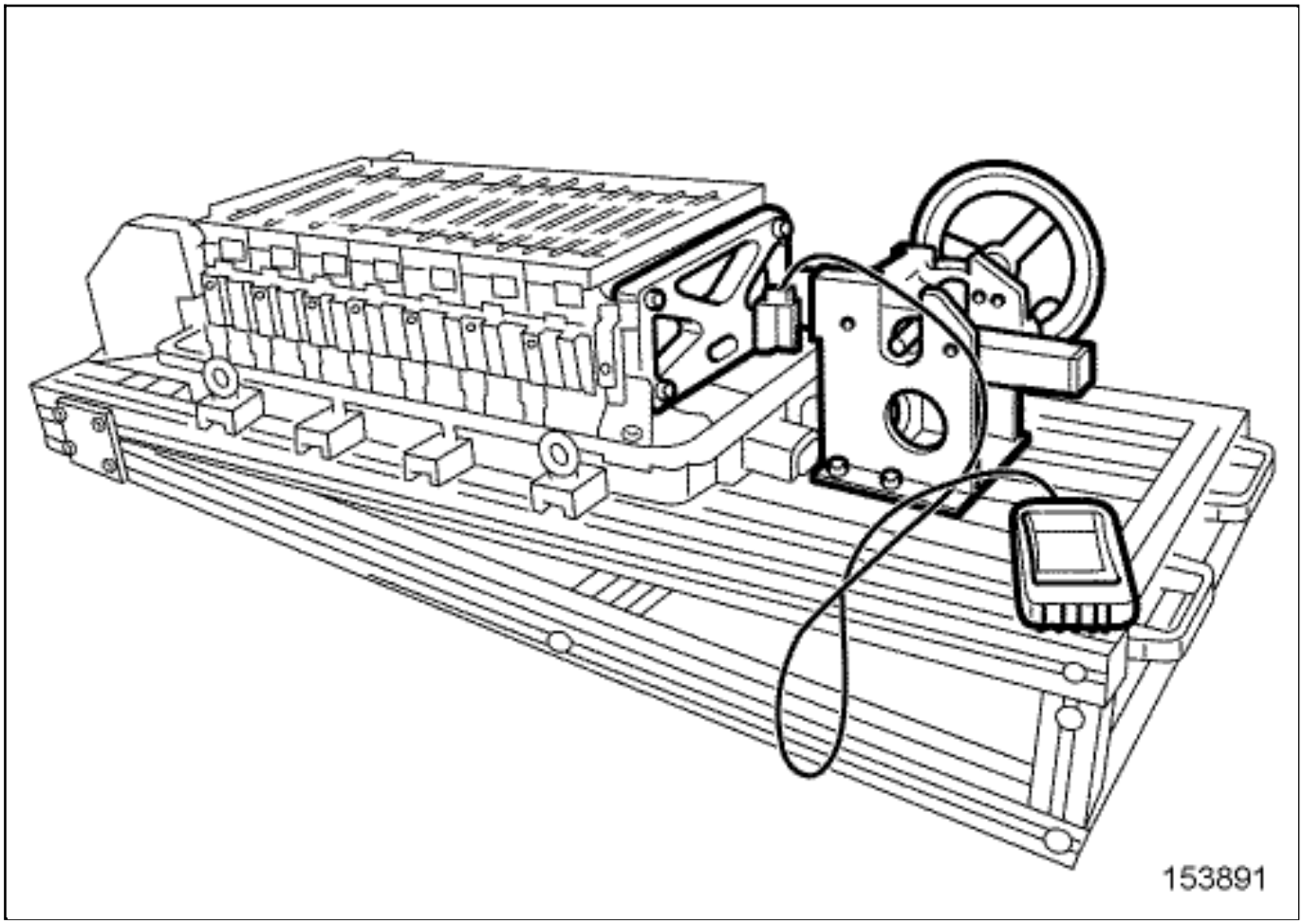

❑

Partially compress the stack using the compressor tool.

Refit (see 19E, Traction battery, Traction battery module stack assembly : Exploded view) :

- the traction battery module screws using an insulated magnetic H8 socket,
- the traction battery module stack rear end plate screws using an insulated magnetic H13 socket.

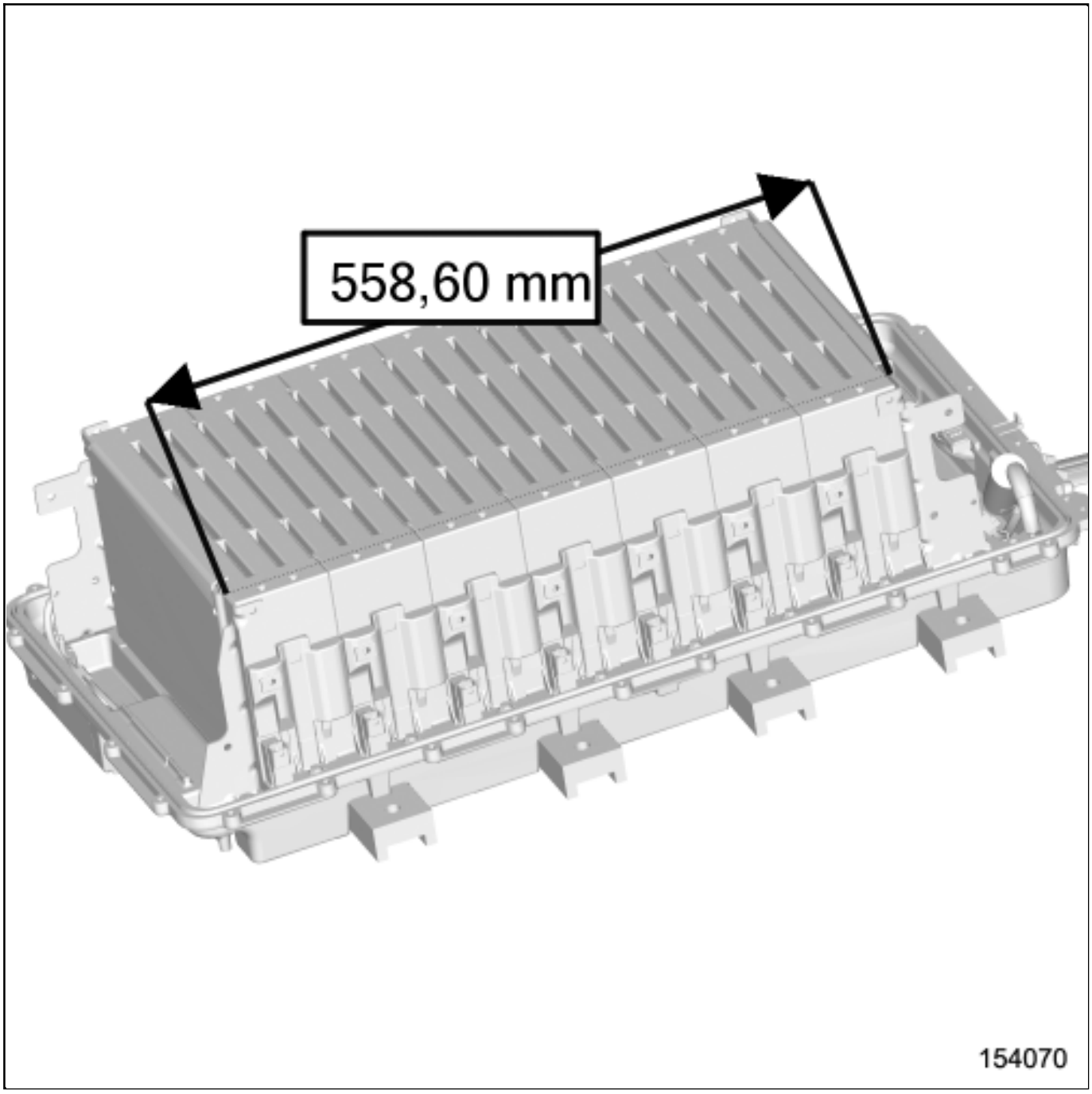

Finally compress the stack using the compressor tool of the stack.

Note:

Compression up to 250 Nto obtain a stack length equal to 558,6 mm.

Not exceed 2000 N.

- Torque tighten the traction battery module screws using an insulated magnetic H8 socket(see 19E, Traction battery, Traction battery module stack assembly : Exploded view) .

- Mark always the screws with a paint markerof a color different from the original.

- Torque tighten the traction battery module stack rear end plate screws using an insulated magnetic H13 socket(see 19E, Traction battery, Traction battery module stack assembly : Exploded view) .

- Mark always the screws with a paint markerof a color different from the original.

- Refit (see 19E, Traction battery, Traction battery module stack assembly : Exploded view) :
  - the traction battery module stack left transverse bar,
  - the traction battery module stack left transverse bar nuts using an insulated magnetic H10 socket,
  - the traction battery module stack right transverse bar,
  - the traction battery module stack right transverse bar nuts using an insulated magnetic H10 socket.

- Torque tighten(see 19E, Traction battery, Traction battery module stack assembly : Exploded view) :
  - the traction battery module stack left transverse bar nuts using an insulated magnetic H10 socket,
  - the traction battery module stack right transverse bar nuts using an insulated magnetic H10 socket.

- Mark always the nuts with a paint markerof a color different from the original.
- Decompress the compression tool.
- Remove the lower cover from the compressor tool.
- Fit the lower cover on the working table equipped with an insulated cover.
- Refit the traction battery negative bus bar into the traction battery lower cover(see 19E, Traction battery, Traction battery module stack assembly : Exploded view) .
- Proceed in the reverse order to removal.

TRACTION BATTERY UPPER COVER : REMOVAL - REFITTING

Note, one or more warnings are present in this procedure

Special tooling required	
Set of trim removal levers.	Car. 1363
Voltage detector	Ele. 1993

Locations and specifications (tightening torques, parts always to be replaced, etc.)(see 19E, Traction battery, Traction battery housing assembly : Exploded view) .

WARNING

- To avoid all risk of damage to the systems, apply the safety and cleanliness instructions and operation recommendations before carrying out any repair:
  - (see 19E, Traction battery, Traction battery : Precautions for the repair) ,
  - Vehicle: Precautions for the repair .

WARNING

DANGER: HIGH VOLTAGE VEHICLE.

Risks of serious burns or electric shock that may prove fatal.

Before carrying out any work on the vehicle, it is essential that you adhere to the instructions regarding vehicle voltage cut-off. This work must be carried out by an employee who is qualified and authorized to work on a high-voltage onboard network.

REMOVAL

1. REMOVAL PREPARATION OPERATION

- Lift the traction batteryTraction battery : Lifting .
- Place the traction battery on the working table (equipped with an insulated cover).

Note:

It is recommended to put wooden blocks under the battery.

- Check the presence of the protective cover on the 3 connectors.

Note:

If no protective covers, check the status of each connector and replace if necessary.

- Clean using a vacuum cleaner equipped with a plastic nozzleand the lint-free clothall traces of dust and dirt on the traction battery upper cover.

2. REMOVAL OPERATION

- Remove the protective covers from the 3 connectors.

- Make sure that the voltage detectorVoltage detector(Ele. 1993) is working correctly before measuring.

WARNING

Never use a voltage detector if its self-test is incorrect as it could provide erroneous data that could place you in danger.

CAUTION

If there is any permanent voltage remaining during measurments, there is an electrical default on the traction battery. It could be an insulation default or default on one the relays inside the junction box.

It is mandatory to determine the root cause of the failure and then to fix it.

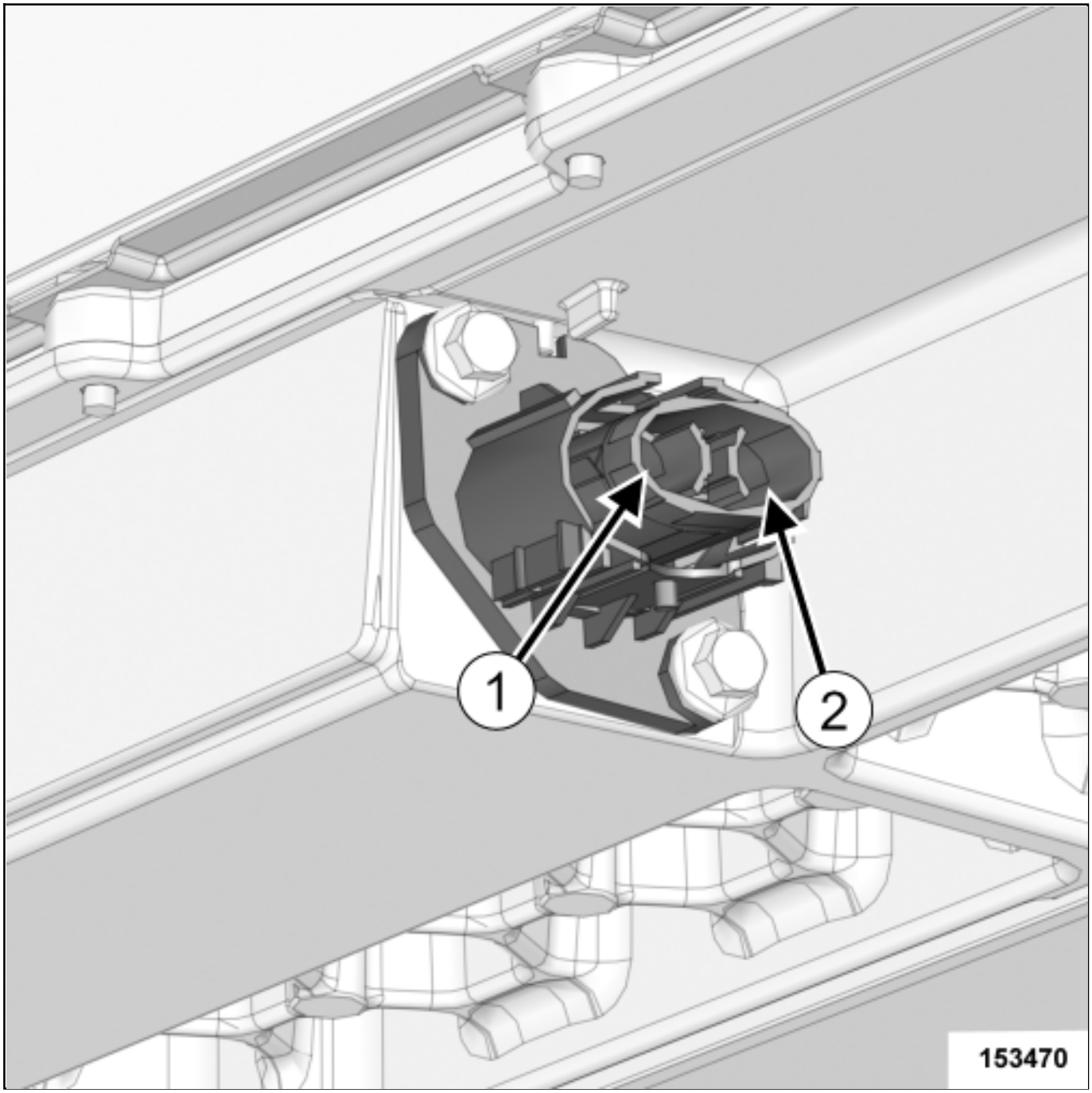

❑

Check that there is no voltage using a voltage detectorVoltage detector(Ele. 1993) between the terminals "+" (1) and "-" (2) of the high voltage connector between charger and traction battery.

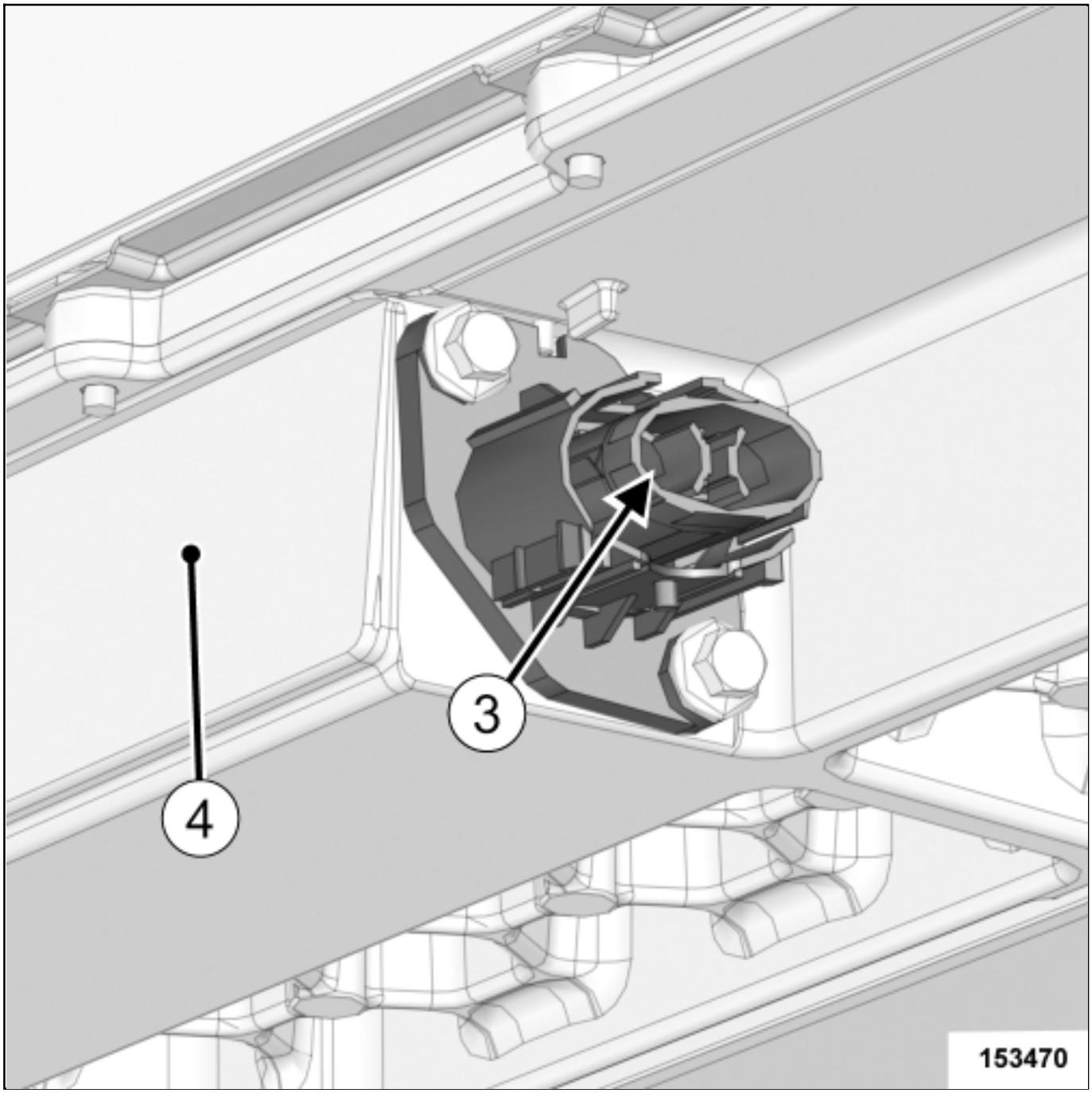

Check that there is no voltage using a voltage detectorVoltage detector(Ele. 1993) between the terminals "+" (3) of the high voltage connector between charger and traction battery and the traction battery lower cover(4) .

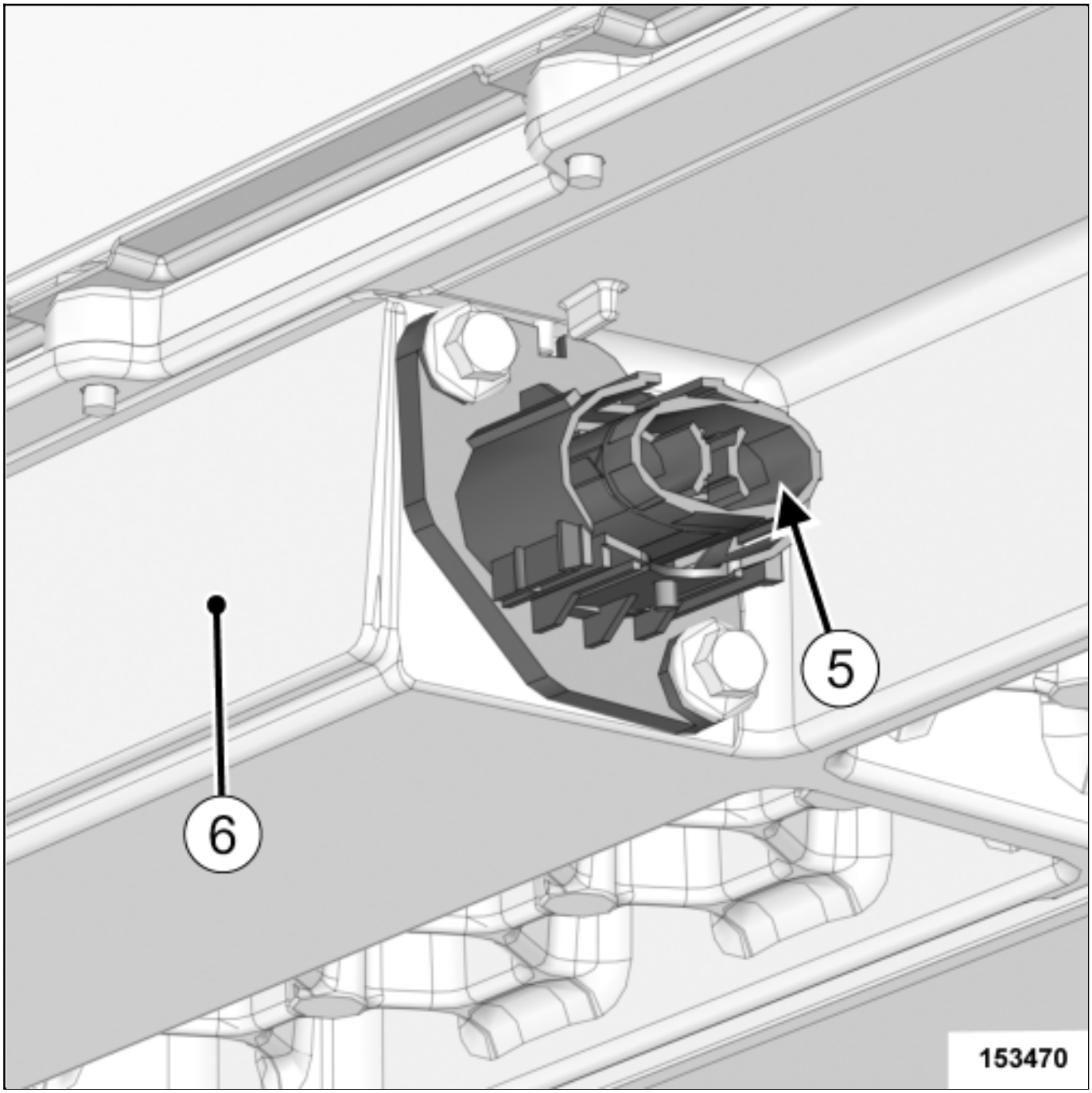

Check that there is no voltage using a voltage detectorVoltage detector(Ele. 1993) between the terminals "-" (5) of the high voltage connector between charger and traction battery and the traction battery lower cover(6) .

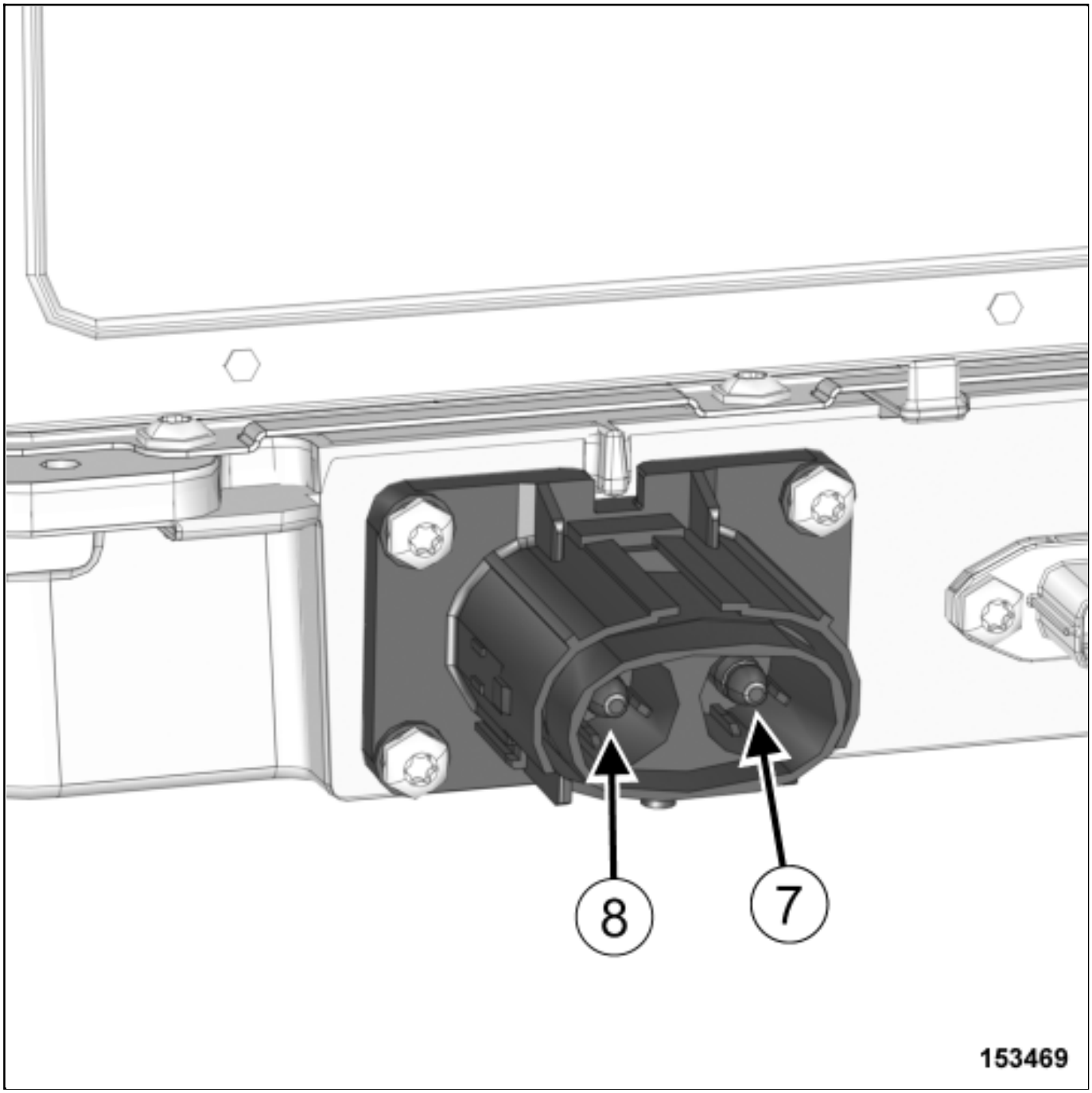

Check that there is no voltage using a voltage detectorVoltage detector(Ele. 1993) between the terminals "+" (7) and "-" (8) of the high voltage connector between converter and traction battery.

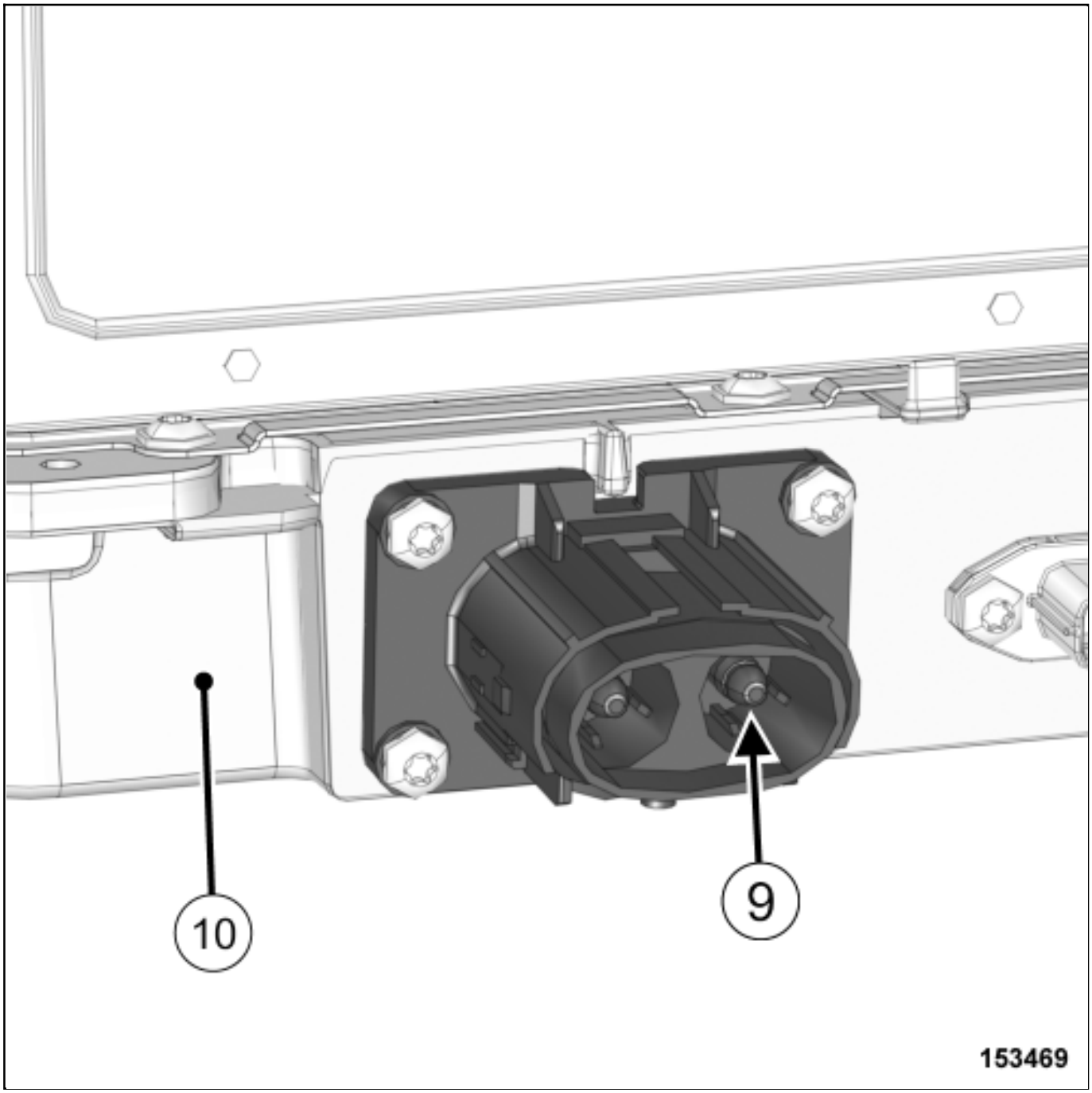

Check that there is no voltage using a voltage detectorVoltage detector(Ele. 1993) between the terminals "+" (9) of the high voltage connector between converter and traction battery and the traction battery lower cover(10) .

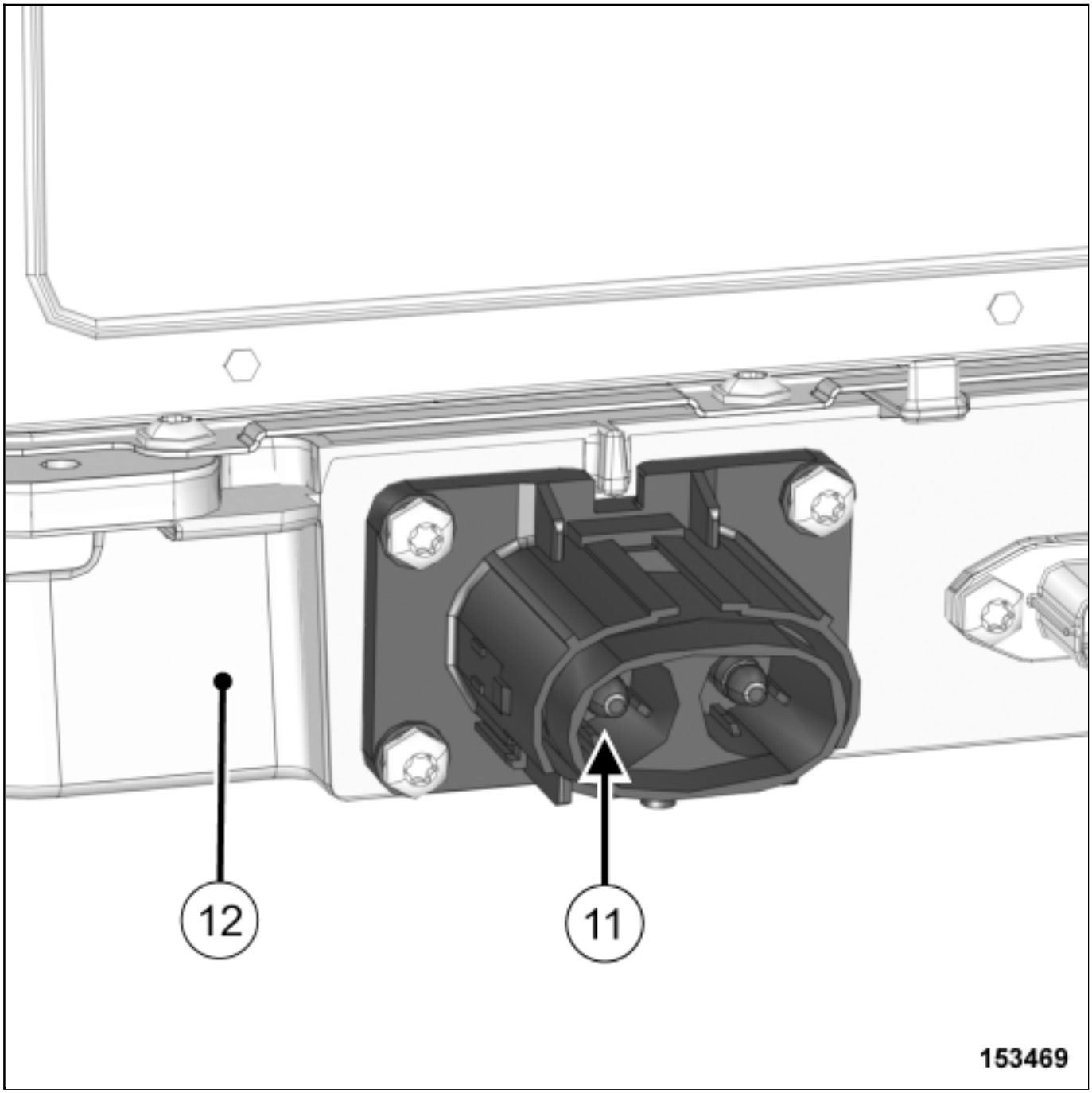

Check that there is no voltage using a voltage detectorVoltage detector(Ele. 1993) between the terminals "-" (11) of the high voltage connector between converter and traction battery and the traction battery lower cover(12) .

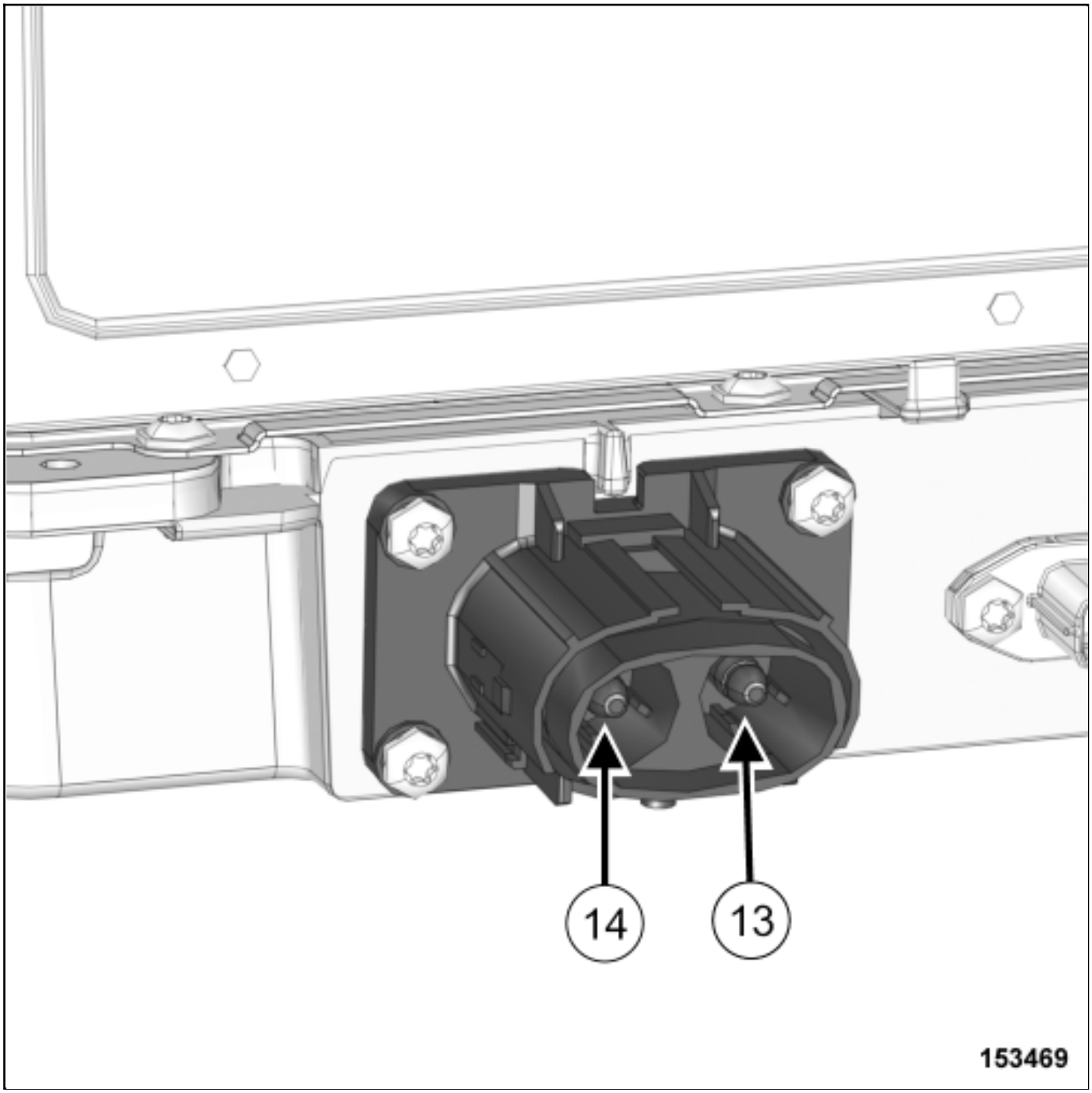
14
13
153469

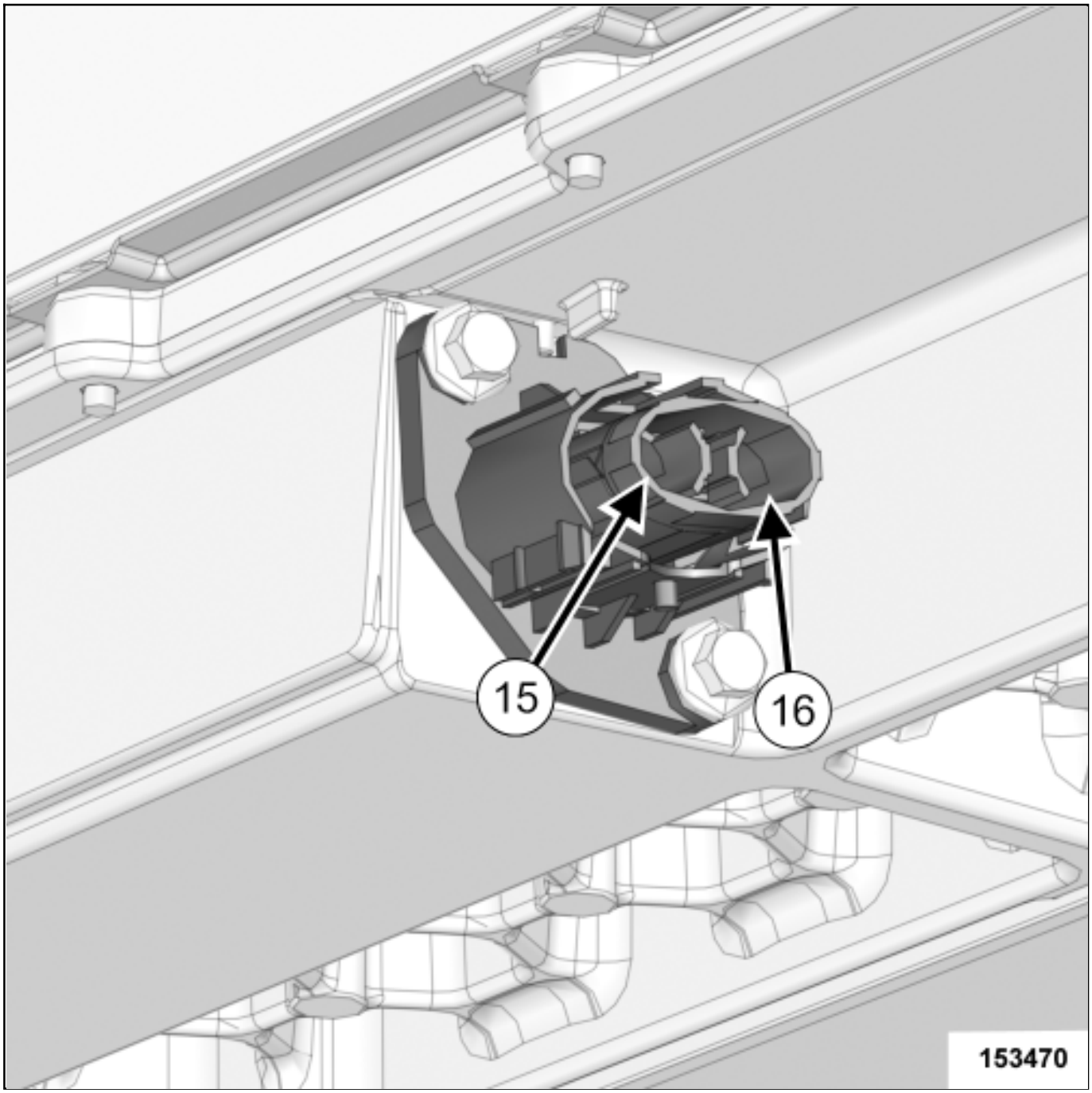

Check that there is no voltage using a voltage detectorVoltage detector(Ele. 1993) :

- between the terminal "+"(13) of the high voltage connector between converter and traction battery and the terminal "+" (15) of the high voltage connector between charger and traction battery,
- between the terminal "+"(13) of the high voltage connector between converter and traction battery and the terminal "-" (16) of the high voltage connector between charger and traction battery,
- between the terminal "-"(14) of the high voltage connector between converter and traction battery and the terminal "+" (15) of the high voltage connector between charger and traction battery,

- between the terminal "-"(14) of the high voltage connector between converter and traction battery and the terminal "-" (16) of the high voltage connector between charger and traction battery,

> Note:
>
> This operation requires two operators and an extension wire.

- Make sure that the voltage detectorVoltage detector(Ele. 1993) is working correctly after measuring.

- Refit the protective covers on the 3 connectors.

- Remove (see 19E, Traction battery, Traction battery housing assembly : Exploded view) :
  - the traction battery upper cover screws using an insulated magnetic H8 socket,
  - the traction battery upper cover.

- Turn it upside down an put it on a working table.

- Remove the traction battery jumper connection screw using an insulated magnetic H8 socket (see 19E, Traction battery, Traction battery module stack assembly : Exploded view) .

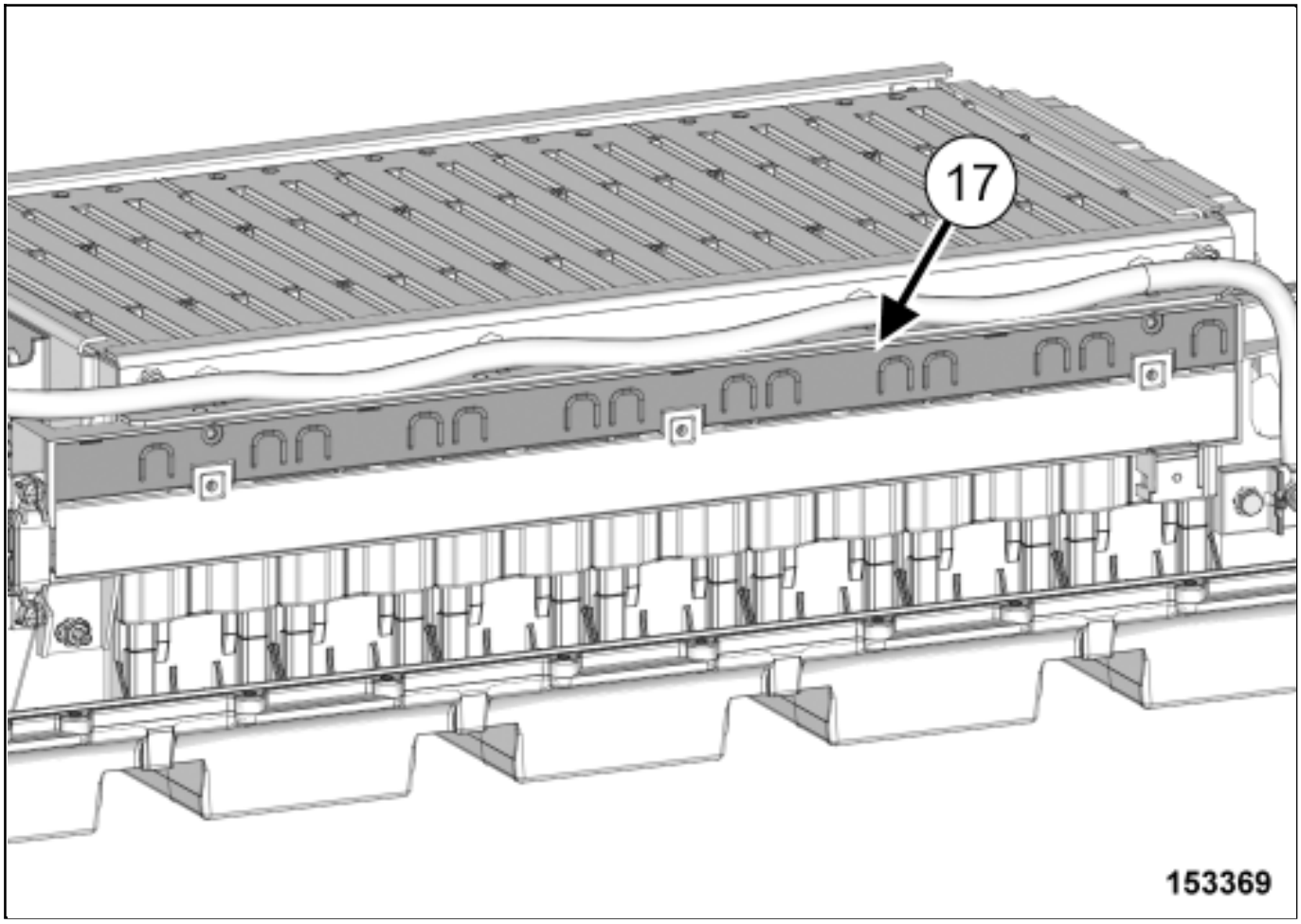

- Unclip the traction battery module semi-rigid connection plate protective cover(17) using the tool Set of trim removal levers.(Car. 1363) .

- Remove the traction battery module electric connection nut from the "+" terminal of the rear module using an insulated magnetic H10 socket(see 19E, Traction battery, Traction battery module stack assembly : Exploded view) .

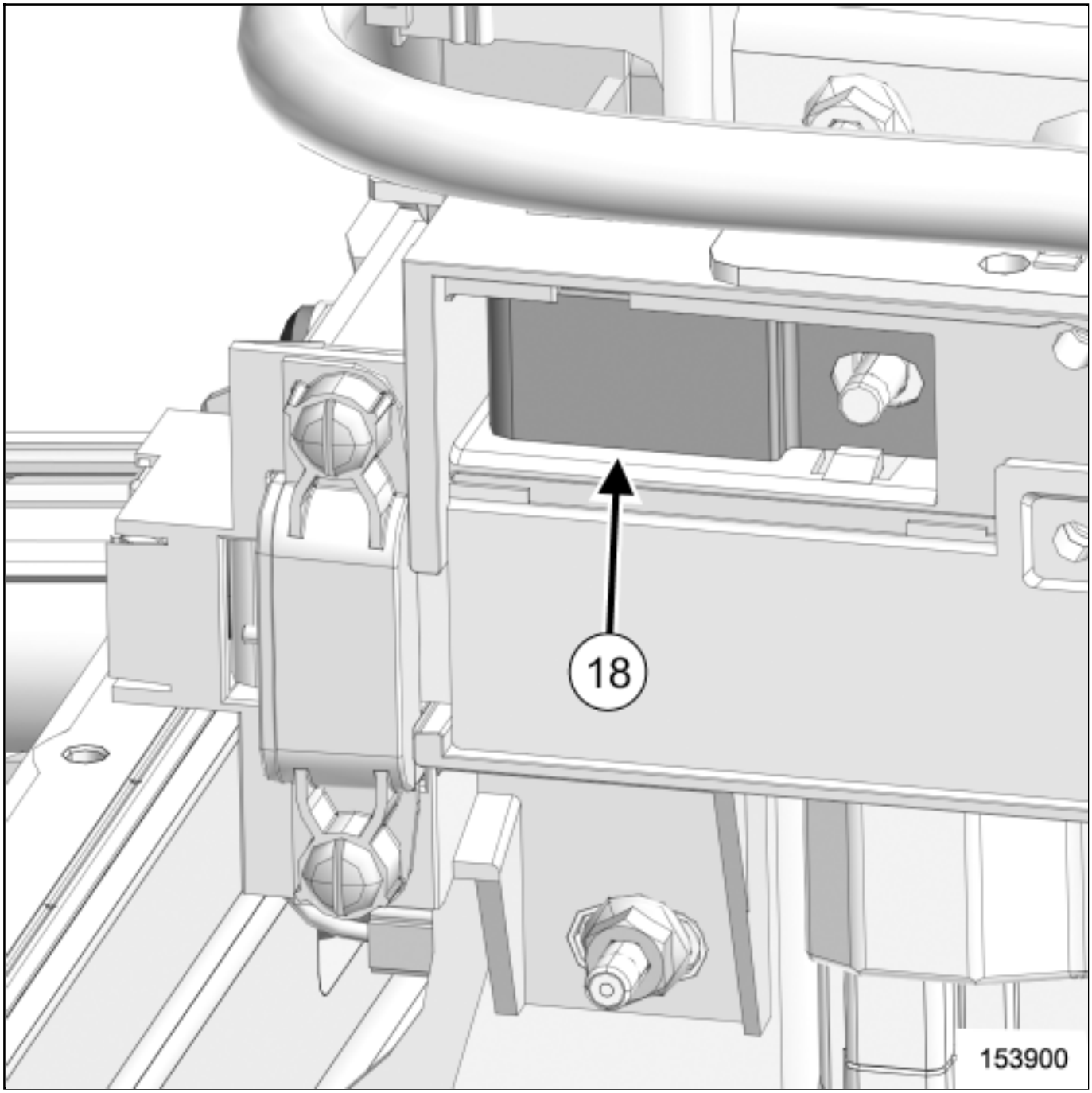

❑

Remove the traction battery bus bar between rear module and jumper connection(18) using the tool Set of trim removal levers.(Car. 1363) .

❑

Clip the traction battery module semi-rigid connection plate protective cover.

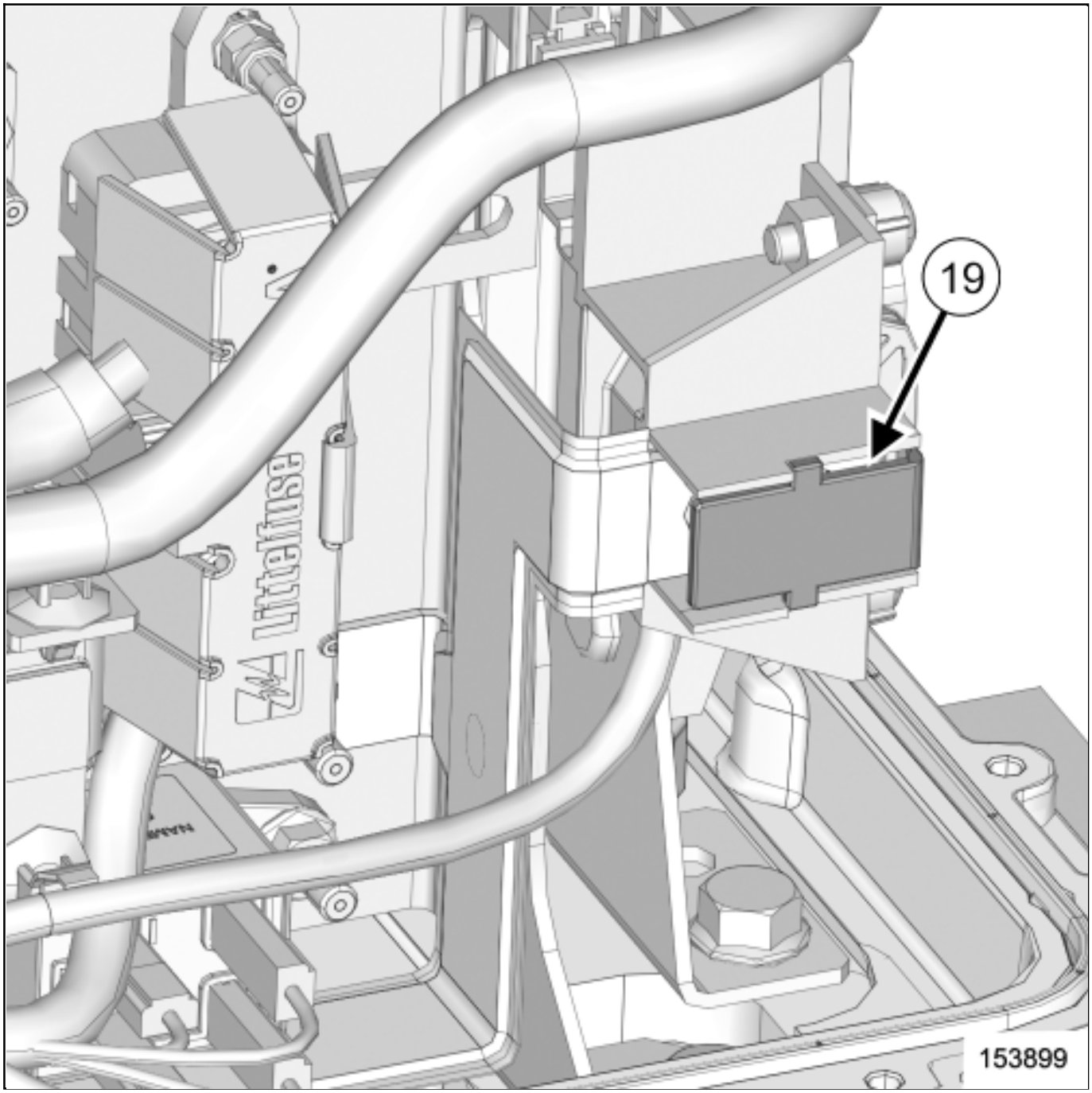

❑

Unclip the protective cover(19) from the "-" terminal using the toolSet of trim removal levers.(Car. 1363) .

❑

Remove the traction battery negative bus bar electric connection nut using an insulated magnetic H10 socket(see 19E, Traction battery, Traction battery module stack assembly : Exploded view) .

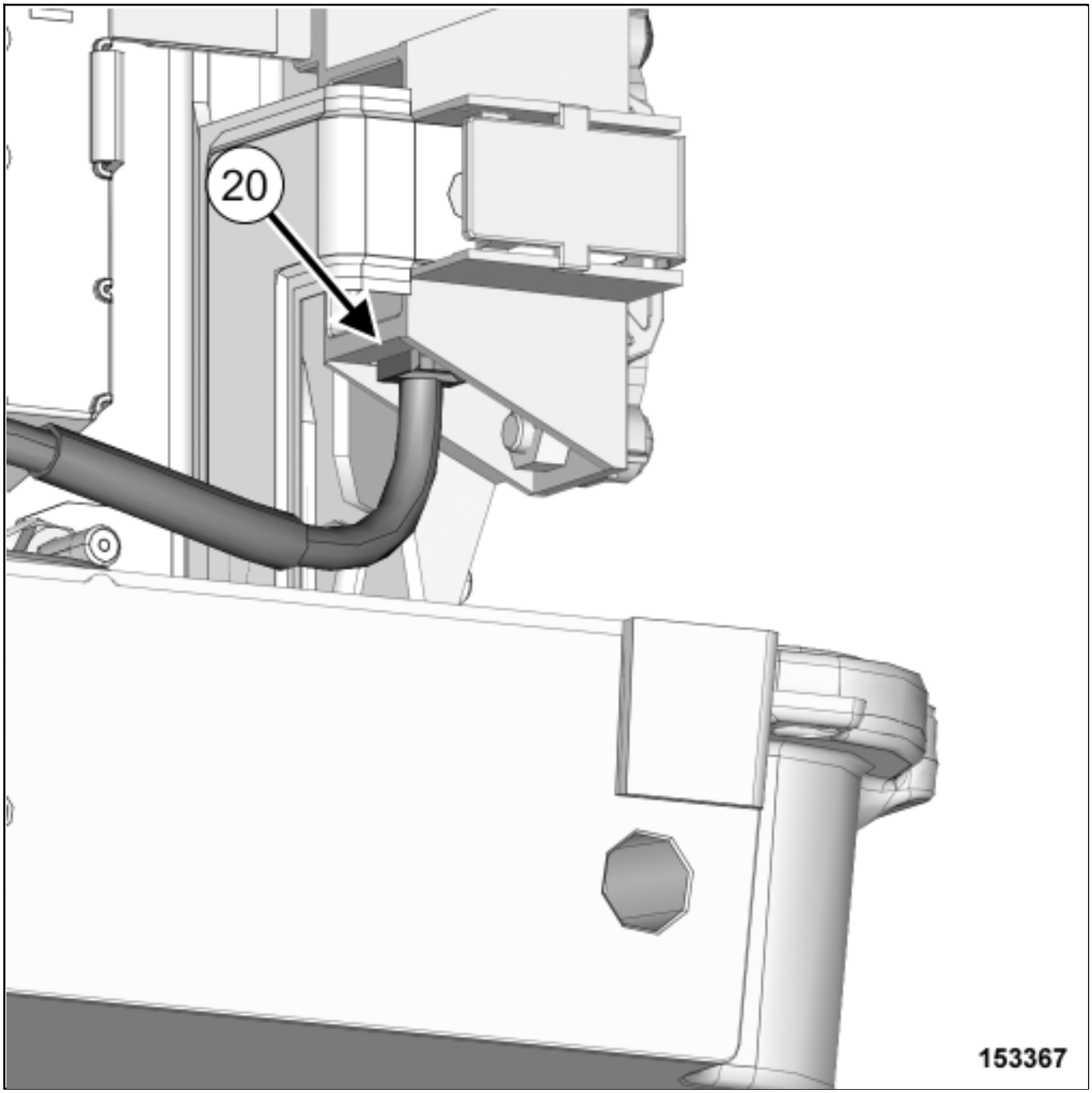

- Disconnect the traction battery module semi-rigid connection plate plug(20) using the toolSet of trim removal levers.(Car. 1363) .

- Remove the rear side earth wire electric connection screw using an insulated magnetic H8 socket (see 19E, Traction battery, Traction battery module stack assembly : Exploded view) .

- Move the rear side earth wire(see 19E, Traction battery, Traction battery module stack assembly : Exploded

view) .

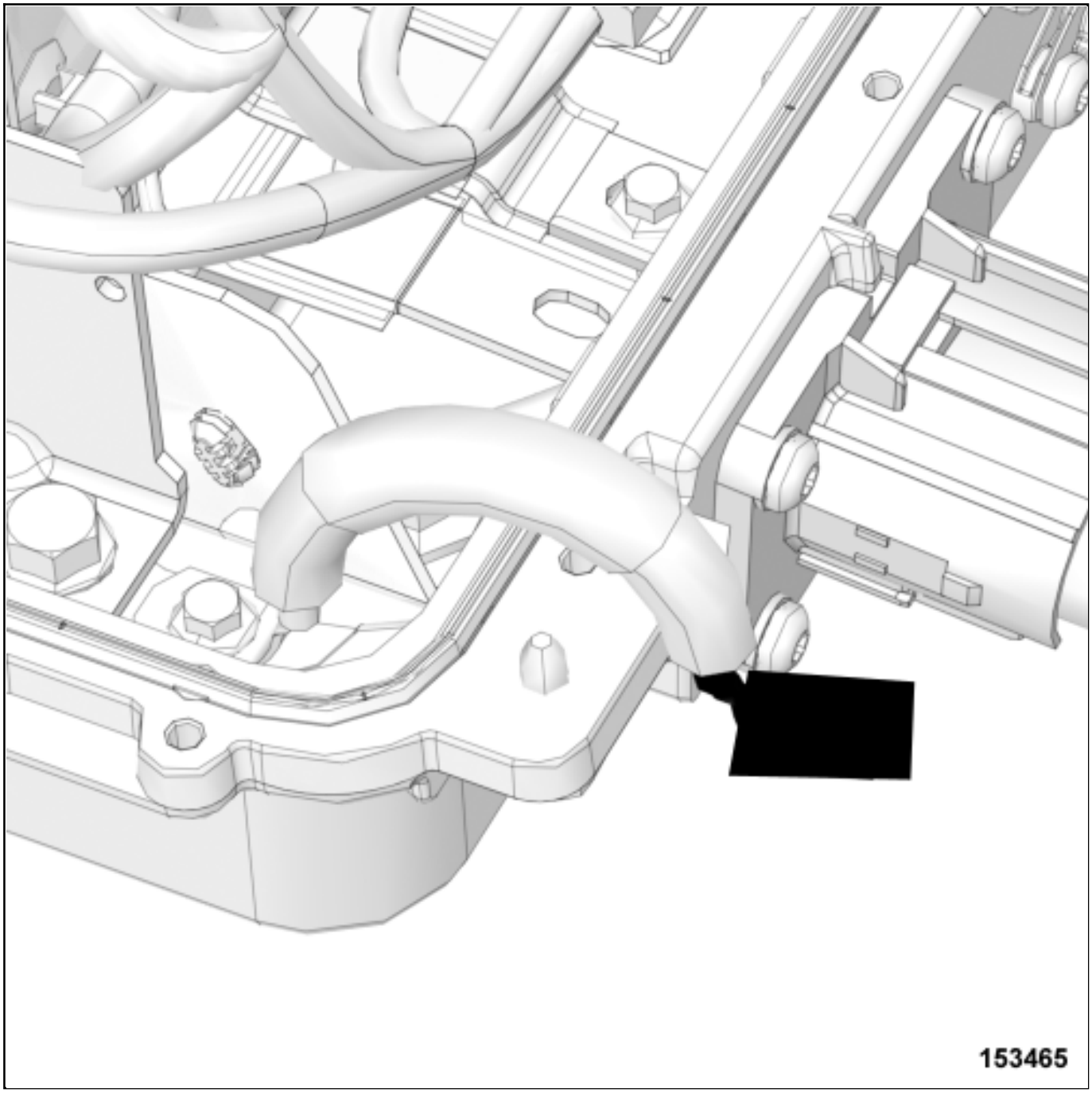

- Insulate the rear side earth wire.

- Remove the traction battery negative bus bar nut using an insulated magnetic H10 socket(see 19E, Traction battery, Traction battery module stack assembly : Exploded view) .

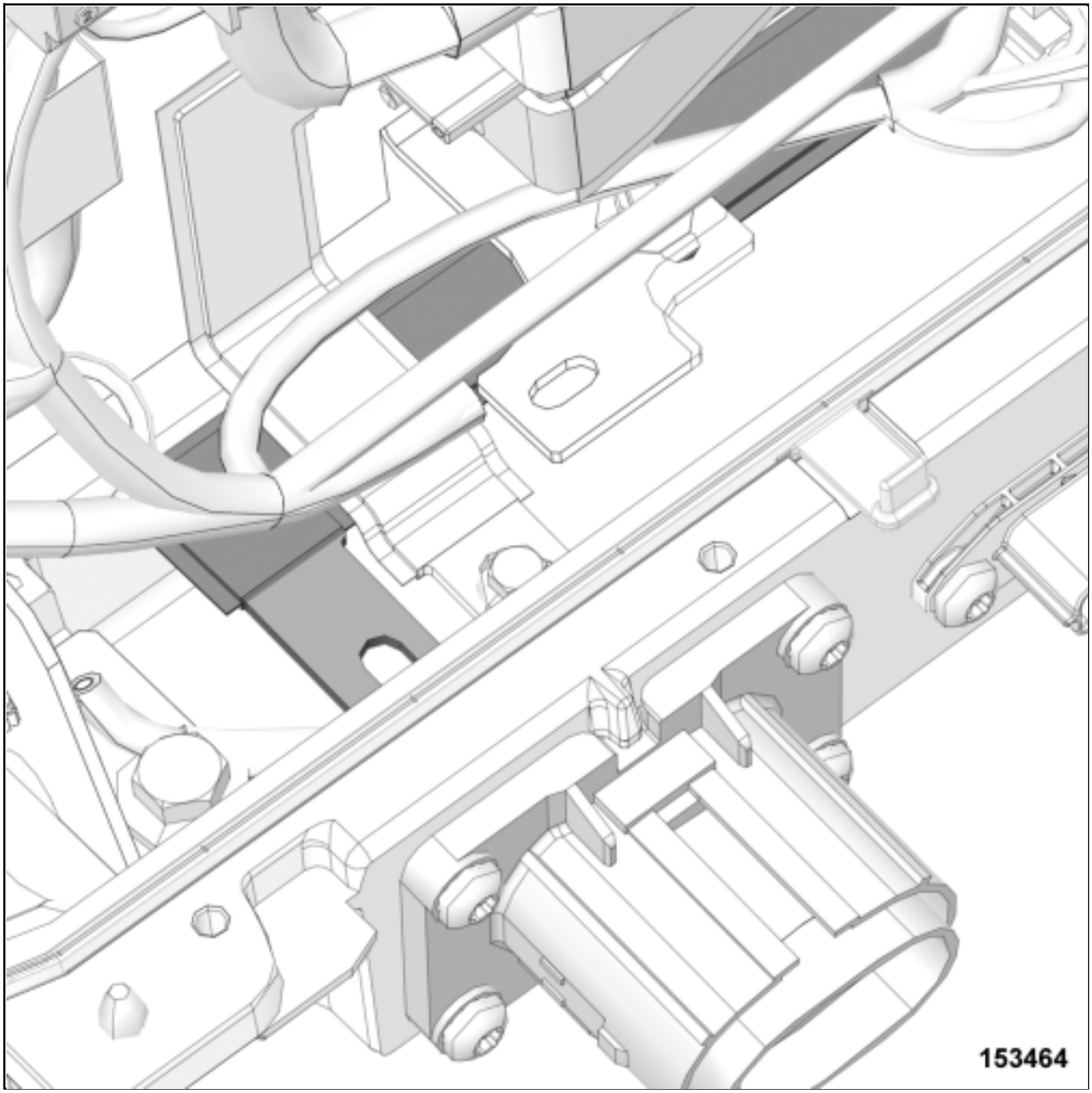

Fit the "-" bus bar in the bottom of the lower cover.

Note:

It is impossible to completely get out the "-" bus bar without removal the traction battery internal junction box.

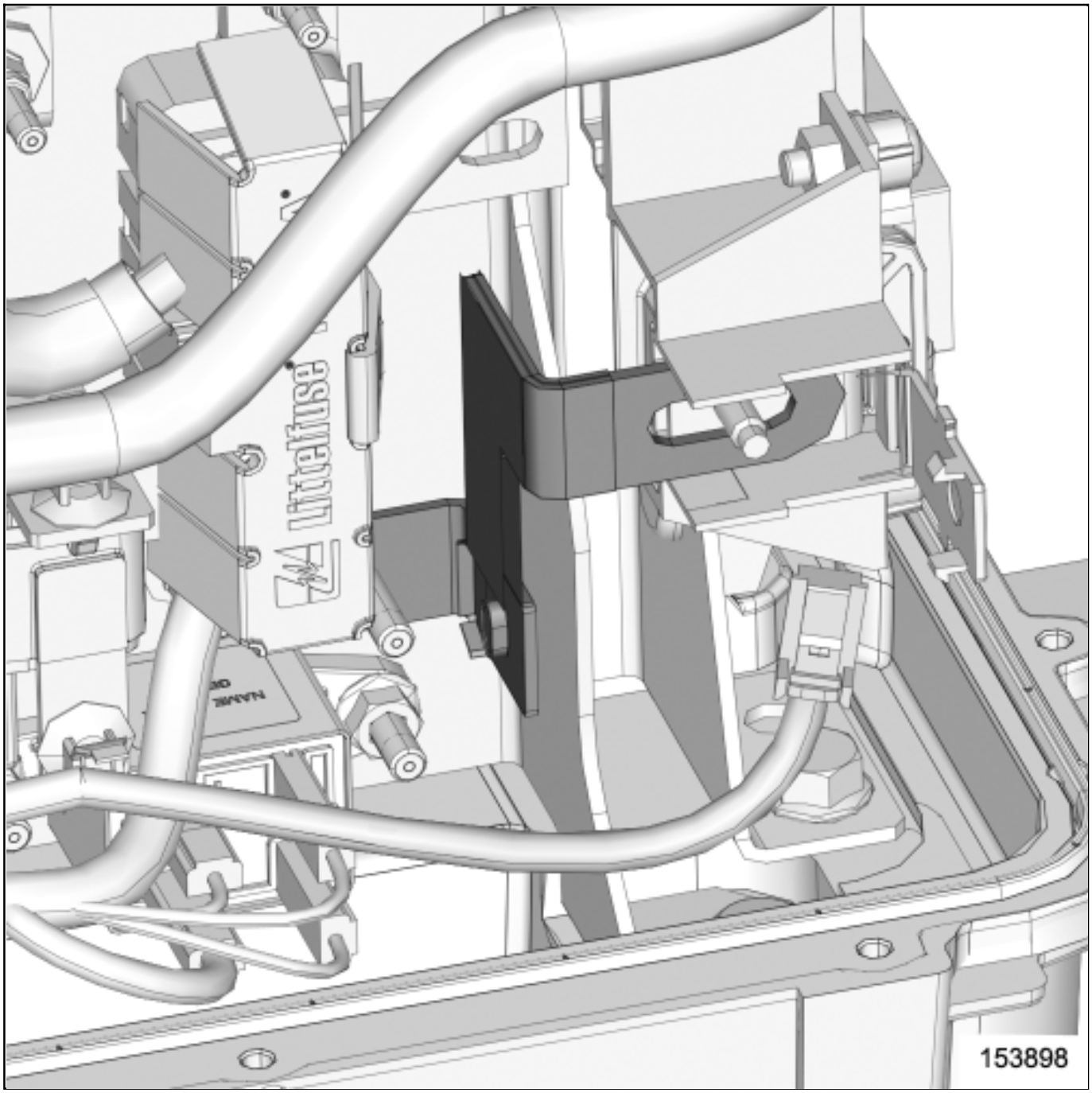

- Fit the traction battery internal safety lockout tool.

- Refit the traction battery negative bus bar nut using an insulated magnetic H10 socket (see 19E, Traction battery, Traction battery module stack assembly : Exploded view) .

- Torque tighten the traction battery negative bus bar nut using an insulated magnetic H10 socket (see 19E, Traction battery, Traction battery module stack assembly : Exploded view) .

Clip the protective cover from the "-" terminal.

Check:

- no water in the lower cover,
- the state seal between the upper and lower cover.

Remove the seal between traction battery upper and lower cover(see 19E, Traction battery, Traction battery housing assembly : Exploded view) .

> Note:
>
> Remove only if the seal is damaged or if there are sealing problems.

REFITTING

1. REFITTING PREPARATION OPERATION

Parts always to be replaced:

- the traction battery breather valve,
- the traction battery air leak seal.

Clean:

- the bearing surface on the traction battery upper cover using the brake cleanerand lint-free clothVehicle: Parts and consumables for the repair ,
- the bearing surface of the seal between upper and lower cover using a vacuum cleaner equipped with a plastic nozzle.

2. REFITTING OPERATION

❑

Refit the safety label(see 19E, Traction battery, Traction battery housing assembly : Exploded view) .

> Note:
>
> Only in case of replace.

❑

Refit the seal between traction battery upper and lower cover(see 19E, Traction battery, Traction battery housing assembly : Exploded view) .

> Note:
>
> Begin by the plot
>
> Refit the 4 side by respecting locators.

> Note:
>
> Attention to mechanical damage of the wirings (no pinch, no crush).

❑

Unclip the protective cover from the "-" terminal using the toolSet of trim removal levers.(Car. 1363) .

❑

Remove:

- the traction battery negative bus bar nut using an insulated magnetic H10 socket(see 19E, Traction battery, Traction battery module stack assembly : Exploded view) ,
- the traction battery internal safety lockout tool.

❑

Refit:

- the "-" bus bar,
- the traction battery negative bus bar nut using an insulated magnetic H10 socket(see 19E, Traction battery, Traction battery module stack assembly : Exploded view) ,
- the traction battery negative bus bar electric connection nut using an insulated magnetic H10 socket(see 19E, Traction battery, Traction battery module stack assembly : Exploded view) .

❑

Remove the insulation from the rear side earth wire.

❑

Fit the rear side earth wire.

❑

Refit the rear side earth wire electric connection screw using an insulated magnetic H8 socket (see 19E, Traction battery, Traction battery module stack assembly : Exploded view) .

❑

Torque tighten the traction battery negative bus bar nut using an insulated magnetic H10 socket (see 19E, Traction battery, Traction battery module stack assembly : Exploded view) .

❑

Mark always the nut with a paint markerof a color different from the original.

❑

Torque tighten the traction battery negative bus bar electric connection nut using an insulated magnetic H10 socket(see 19E, Traction battery, Traction battery module stack assembly : Exploded view) .

❑

Mark always the nut with a paint markerof a color different from the original.

❑

Clip the protective cover on the "-" terminal.

❑

Torque tighten the rear side earth wire electric connection screw using an insulated magnetic H8 socket (see 19E, Traction battery, Traction battery module stack assembly : Exploded view) .

❑

Mark always the screw with a paint markerof a color different from the original.

❑

Unclip the traction battery module semi-rigid connection plate protective cover using the toolSet of trim removal levers.(Car. 1363) .

❑

Refit (see 19E, Traction battery, Traction battery module stack assembly : Exploded view) :

- the traction battery bus bar between rear module and jumper connection,
- the traction battery module electric connection nut from the "+" terminal of the rear module using an insulated magnetic H10 socket,
- the traction battery jumper connection screw using an insulated magnetic H8 socket.

❑

Torque tighten the traction battery module electric connection nut from the "+" terminal of the rear module using an insulated magnetic H10 socket(see 19E, Traction battery, Traction battery module stack assembly : Exploded view) .

❑

Mark always the nut with a paint markerof a color different from the original.

❑

Clip the traction battery module semi-rigid connection plate protective cover.

❑

Torque tighten the traction battery jumper connection screw using an insulated magnetic H8 socket (see 19E, Traction battery, Traction battery module stack assembly : Exploded view) .

❑

Mark always the screw with a paint markerof a color different from the original.

❑

Connect the traction battery module semi-rigid connection plate plug.

Note:

Make a test push-pull on the connector.

❑

Refit (see 19E, Traction battery, Traction battery housing assembly : Exploded view) :

- the traction battery upper cover,
- the traction battery upper cover screws using an insulated magnetic H8 socket.

❑

Torque tighten in the order the traction battery upper cover screws using an insulated magnetic H8 socket(see 19E, Traction battery, Traction battery housing assembly : Exploded view) .

❑

Mark always the screws with a paint markerof a color different from the original.

❑

Remove the protective covers from the 3 connectors.

❑

Put the plastic tape to seal:

- the high voltage connector between converter and traction battery,
- the high voltage connector between charger and traction battery.

❑

Remove the traction battery breather valve(see 19E, Traction battery, Traction battery housing assembly : Exploded view) .

1- ONLY FOR BATTERY WITH AIR LEAK SCREW

❑

Remove the air leak screw using the drain plug spanner and its seal(see 19E, Traction battery, Traction battery housing assembly : Exploded view) .

❑

Put the plastic tape to seal the traction battery breather valve.

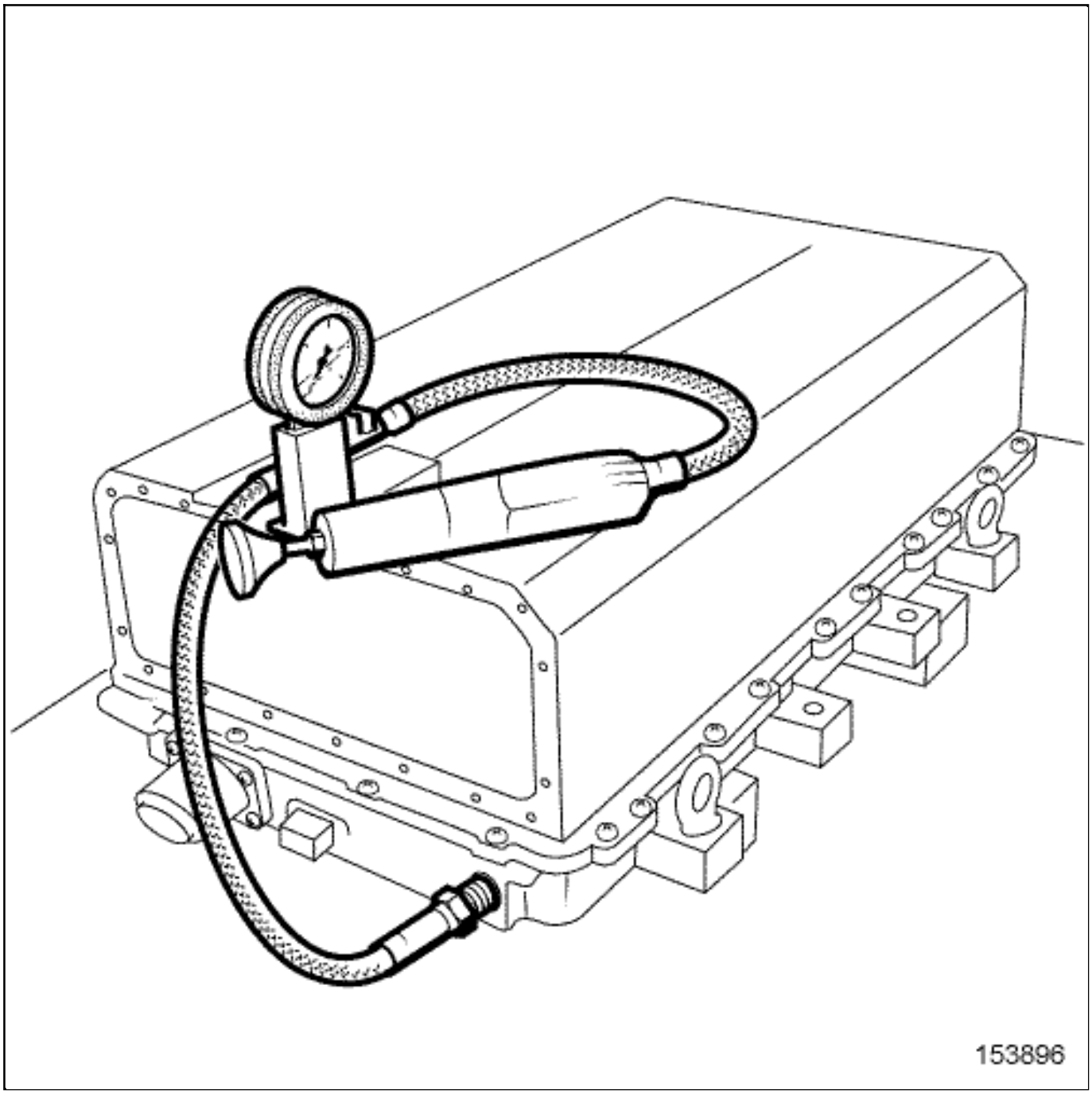

-

Fit the plug of the air leak check tool.

-

Check the airtightness of the traction battery using the air leak test tool and applying a maximum pressure of 50 mbar. Threshold leakage is 30 cubic centimetersper minute.

-

Identify the leakage zone using soapy water.

Note:

If leakage change the part in question.

Note:

-if not, check if there is no air leak from one of the connector,

-if not, remove the upper cover.

Remove:

- the plastic tape that seals the connectors and the breather valve,
- the plug of the air leak check tool.

Refit:

- the new traction battery breather valve(see 19E, Traction battery, Traction battery housing assembly : Exploded view) ,
- the air leak screw using the drain plug spanner with a new seal(see 19E, Traction battery, Traction battery housing assembly : Exploded view) .

Torque tighten the air leak screw using the drain plug spanner(see 19E, Traction battery, Traction battery housing assembly : Exploded view) .

Mark always the screw with a paint markerof a color different from the original.

2- ONLY FOR BATTERY WITHOUT AIR LEAK SCREW

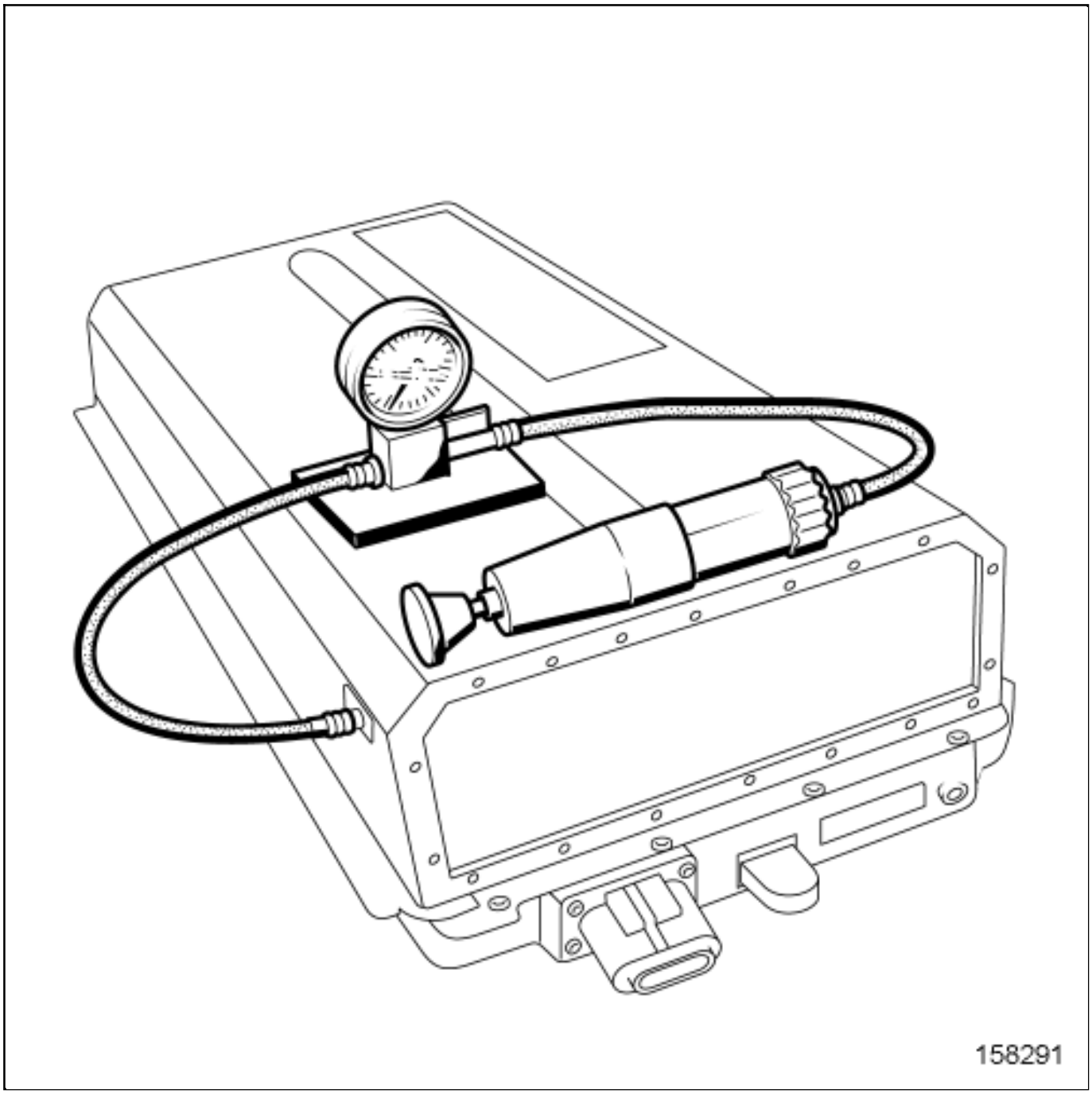

- Fit the plug of the air leak check tool.

- Check the airtightness of the traction battery using the air leak test tool and applying a maximum pressure of 50 mbar. Threshold leakage is 30 cubic centimetersper minute.

- Identify the leakage zone using soapy water.

Note:

If leakage change the part in question.

Note:

-if not, check if there is no air leak from one of the connector,

-if not, remove the upper cover.

❑

Remove:

- the plastic tape that seals the connectors,
- the plug of the air leak check tool.

❑

Refit the new traction battery breather valve(see 19E, Traction battery, Traction battery housing assembly : Exploded view) .

❑

Make sure that the voltage detectorVoltage detector(Ele. 1993) is working correctly before measuring.

WARNING

Never use a voltage detector if its self-test is incorrect as it could provide erroneous data that could place you in danger.

CAUTION

If there is any permanent voltage remaining during measurments, there is an electrical default on the traction battery. It could be an insulation default or default on one the relays inside the junction box.

It is mandatory to determine the root cause of the failure and then to fix it.

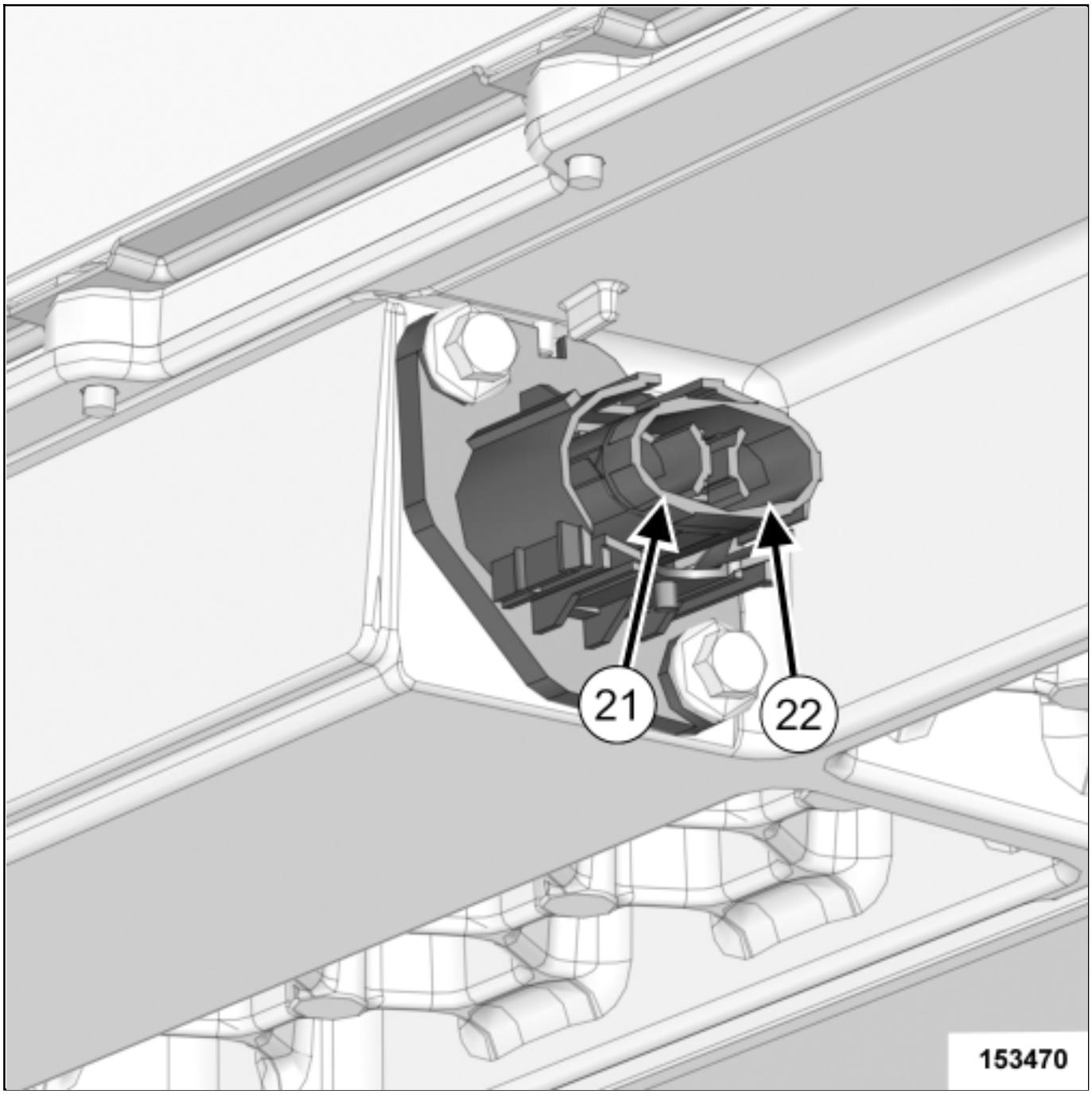

- Check that there is no voltage using a voltage detectorVoltage detector(Ele. 1993) between the

terminals "+" (21) and "-" (22) of the high voltage connector between charger and traction battery.

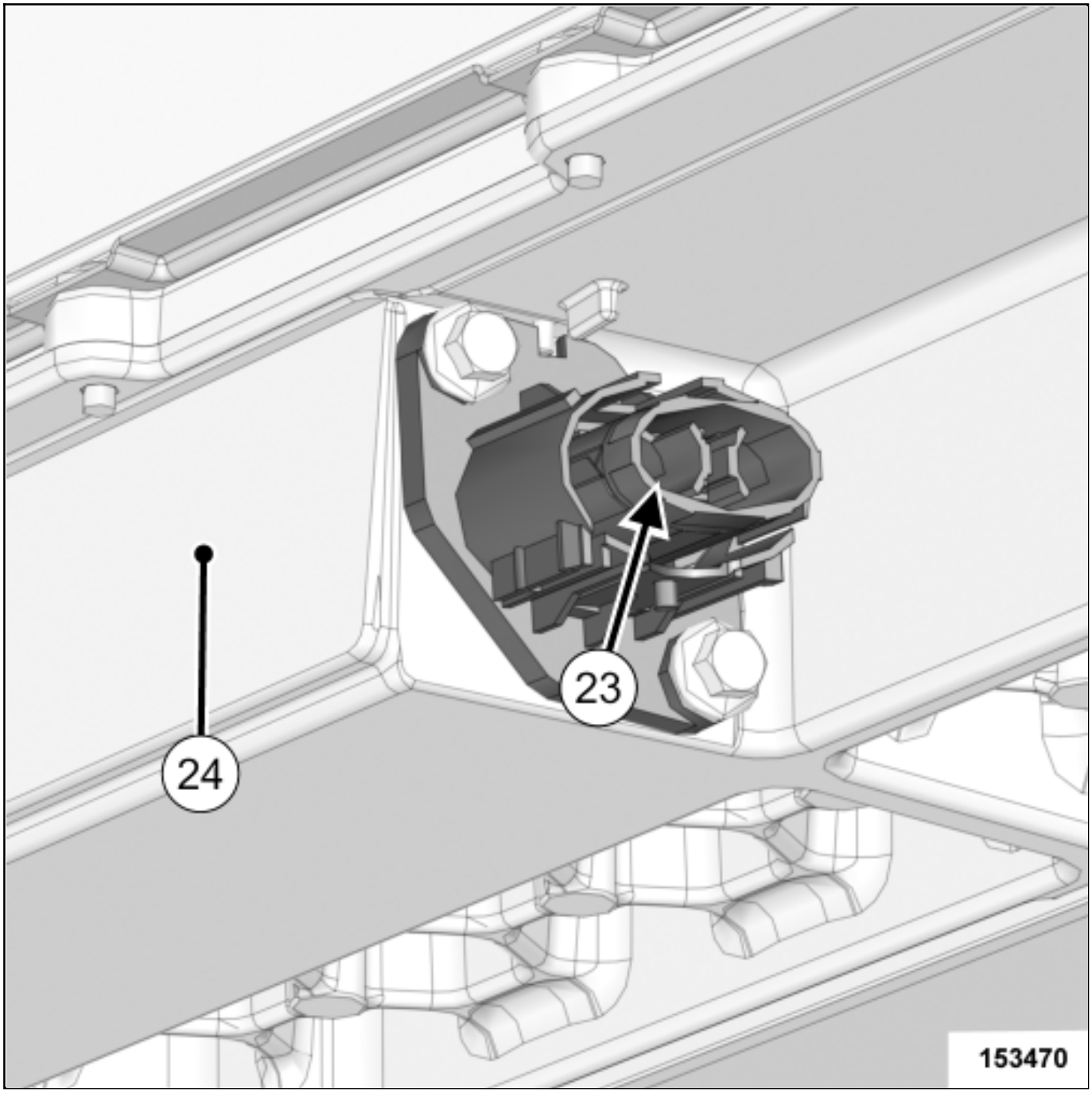

Check that there is no voltage using a voltage detectorVoltage detector(Ele. 1993) between the terminals "+" (23) of the high voltage connector between charger and traction battery and the traction battery lower cover(24) .

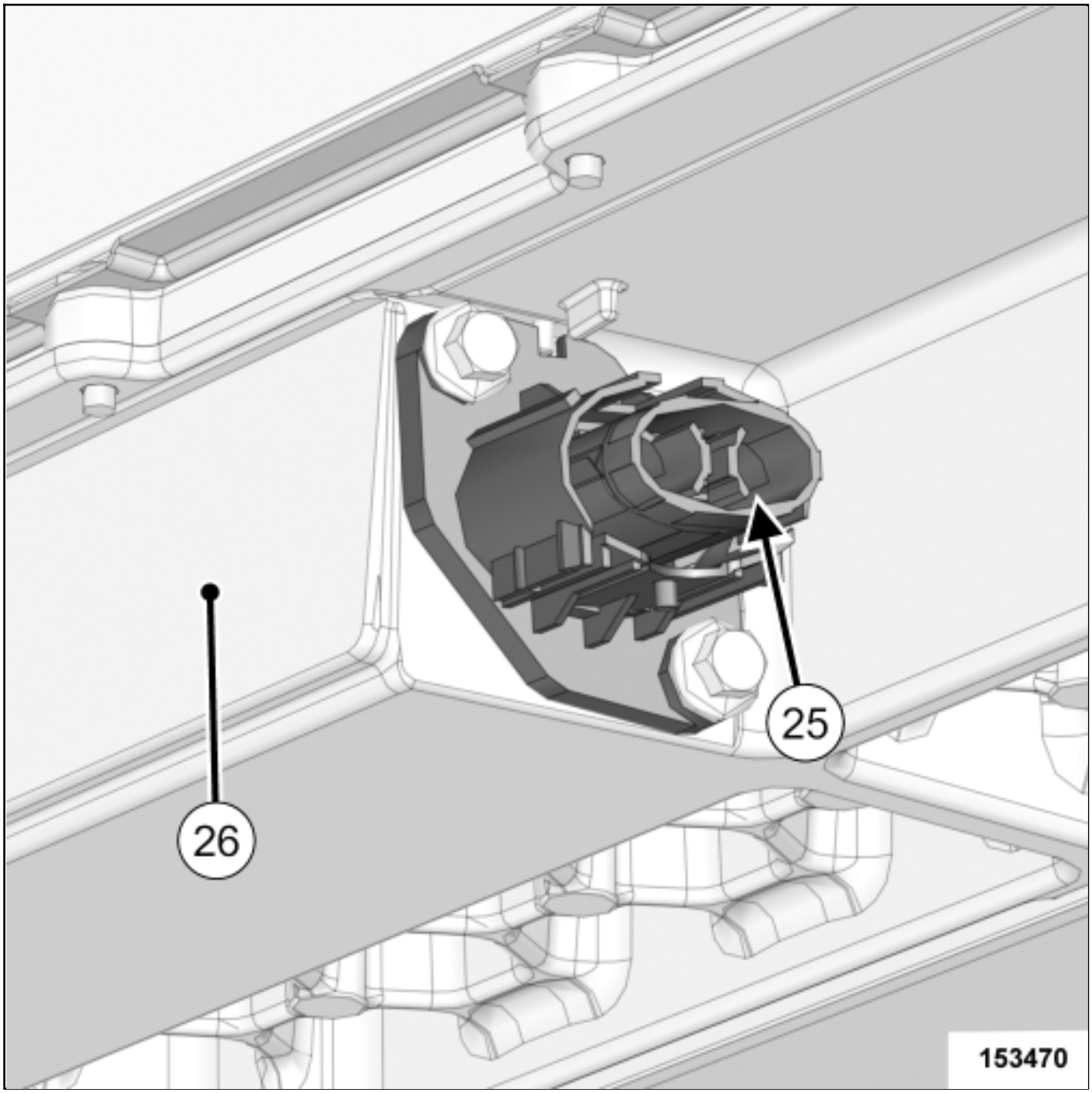

Check that there is no voltage using a voltage detectorVoltage detector(Ele. 1993) between the terminals "-" (25) of the high voltage connector between charger and traction battery and the traction battery lower cover(26) .

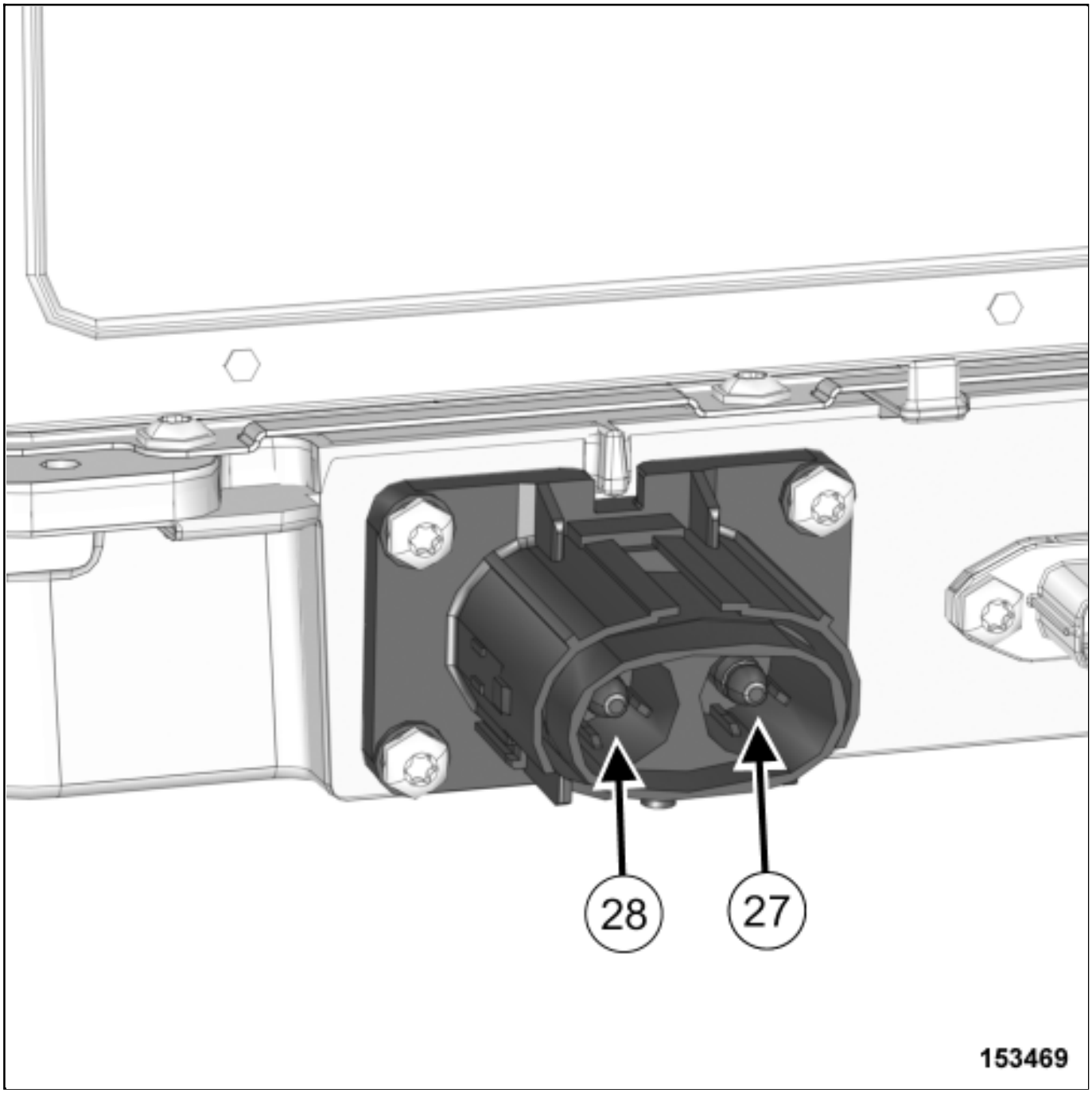

Check that there is no voltage using a voltage detectorVoltage detector(Ele. 1993) between the terminals "+" (27) and "-" (28) of the high voltage connector between converter and traction battery.

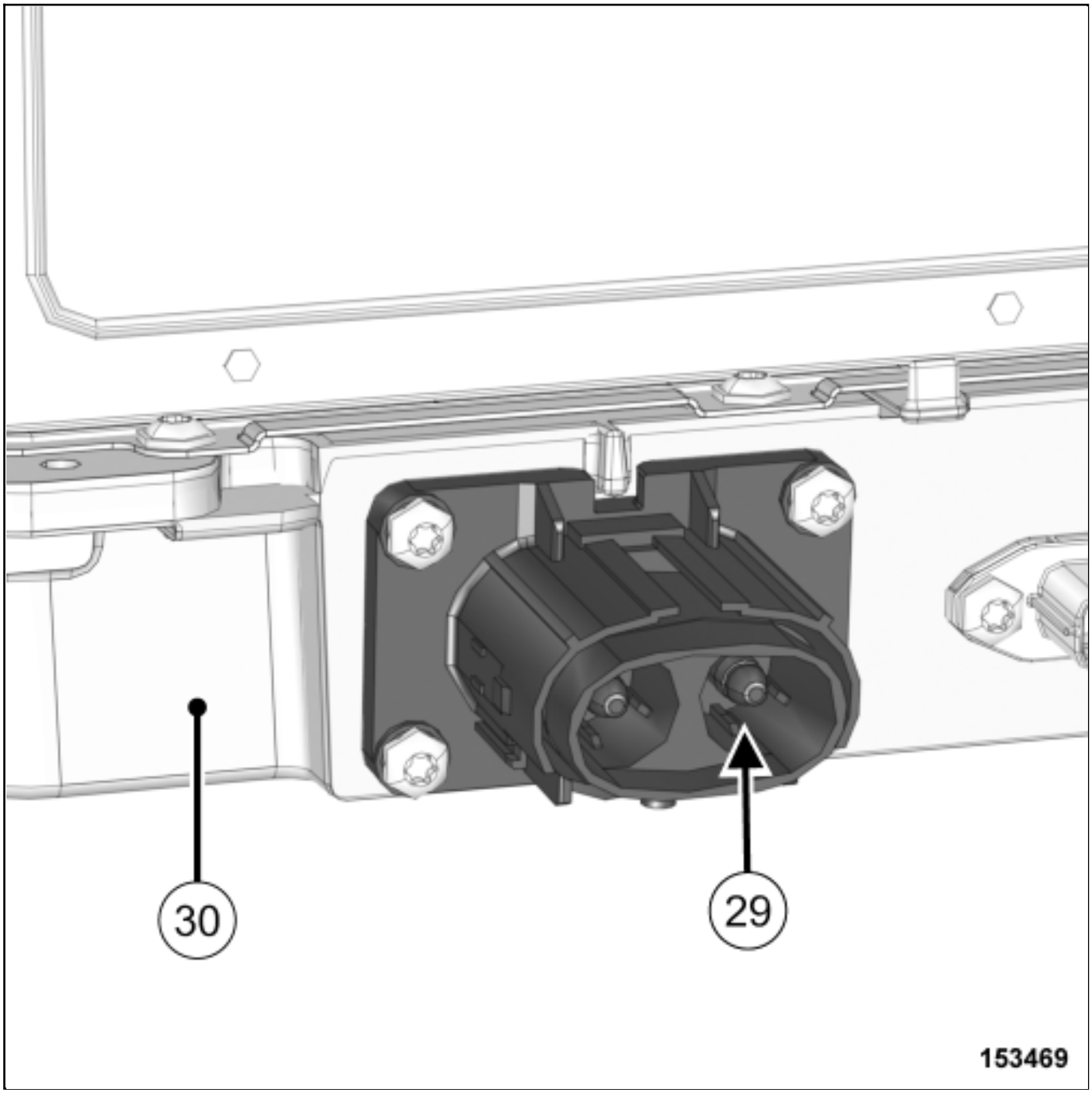

Check that there is no voltage using a voltage detectorVoltage detector(Ele. 1993) between the terminals "+" (29) of the high voltage connector between converter and traction battery and the traction battery lower cover(30) .

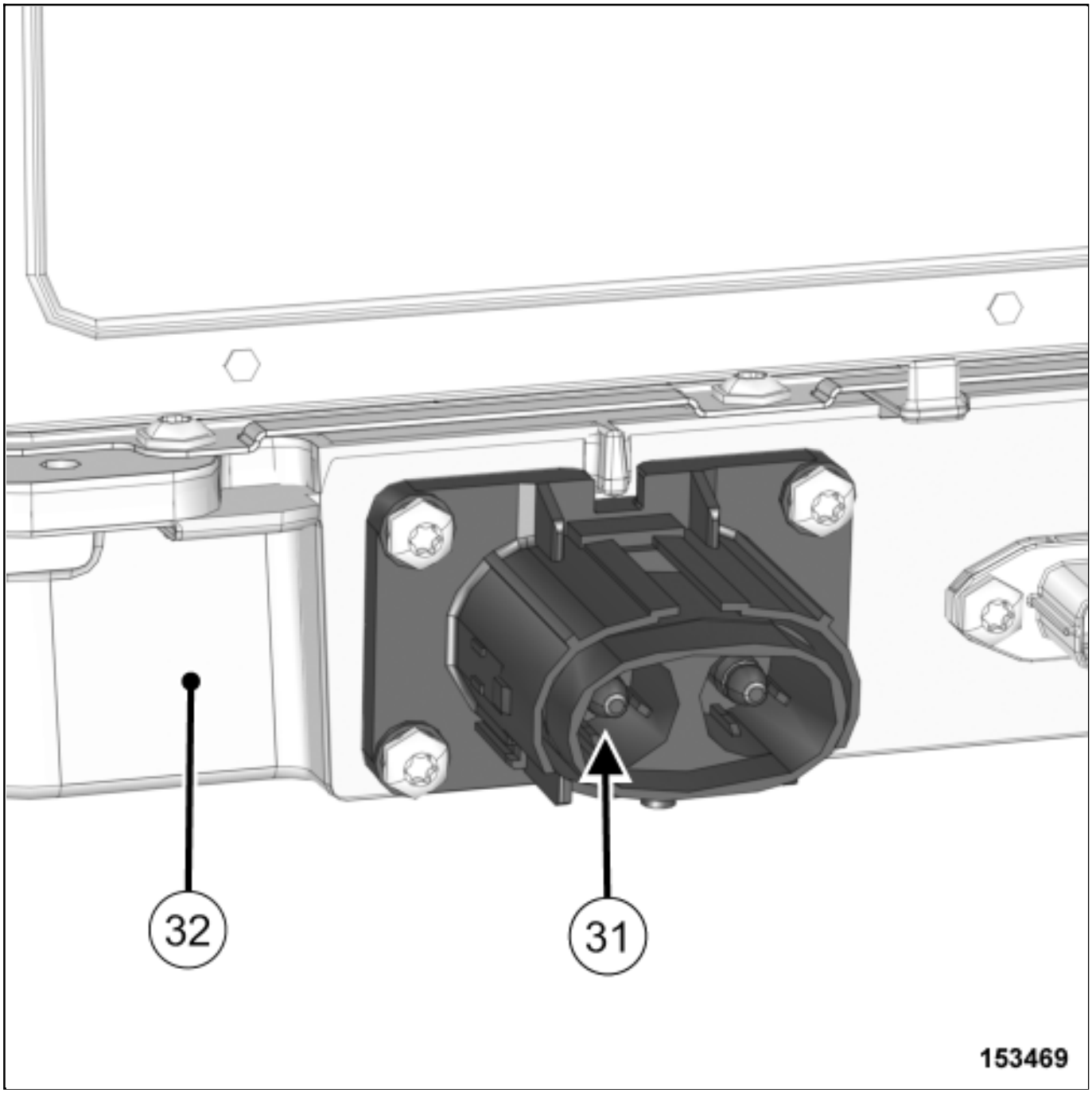

Check that there is no voltage using a voltage detectorVoltage detector(Ele. 1993) between the terminals "-" (31) of the high voltage connector between converter and traction battery and the traction battery lower cover(32) .

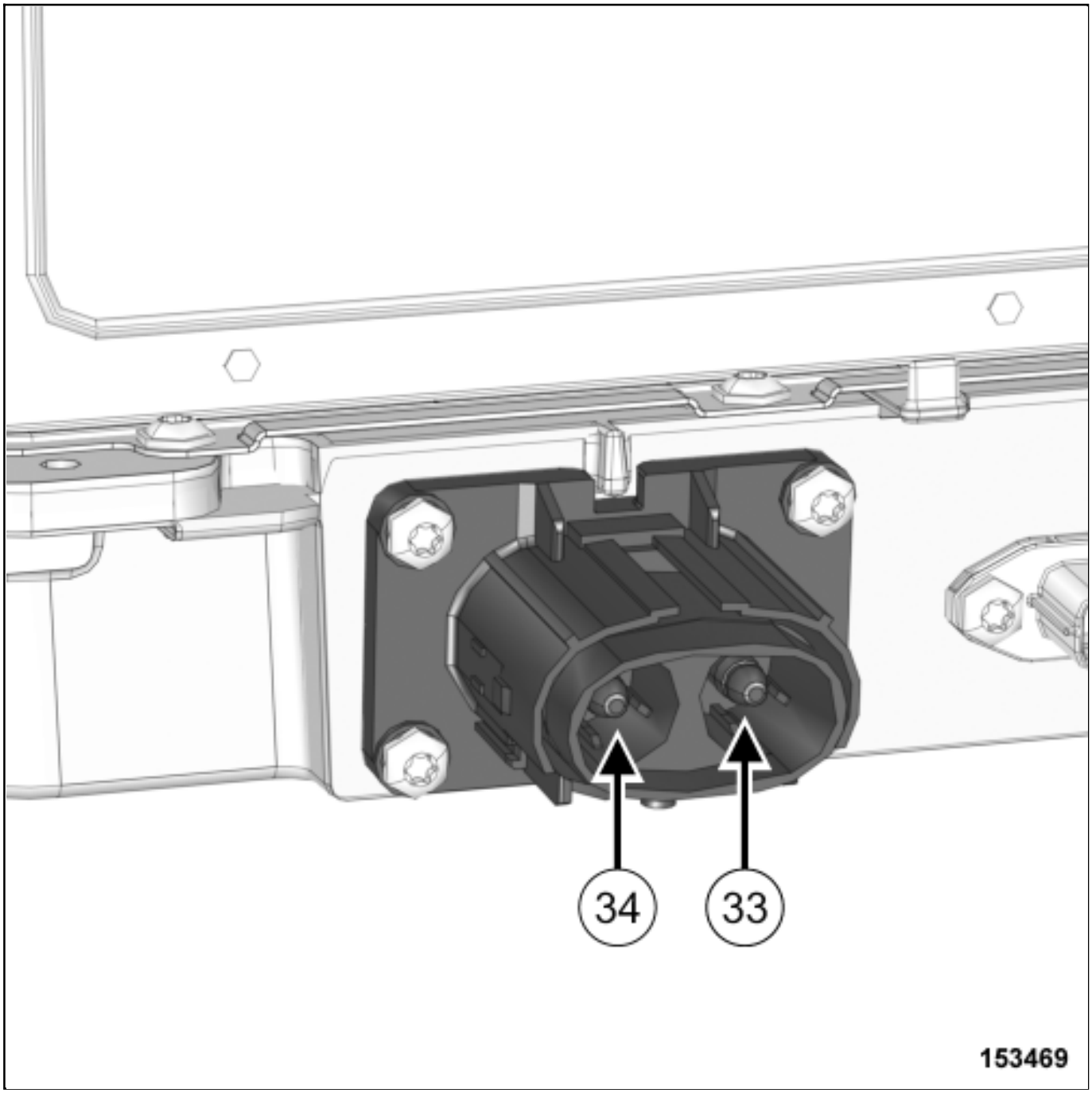
34
33
153469

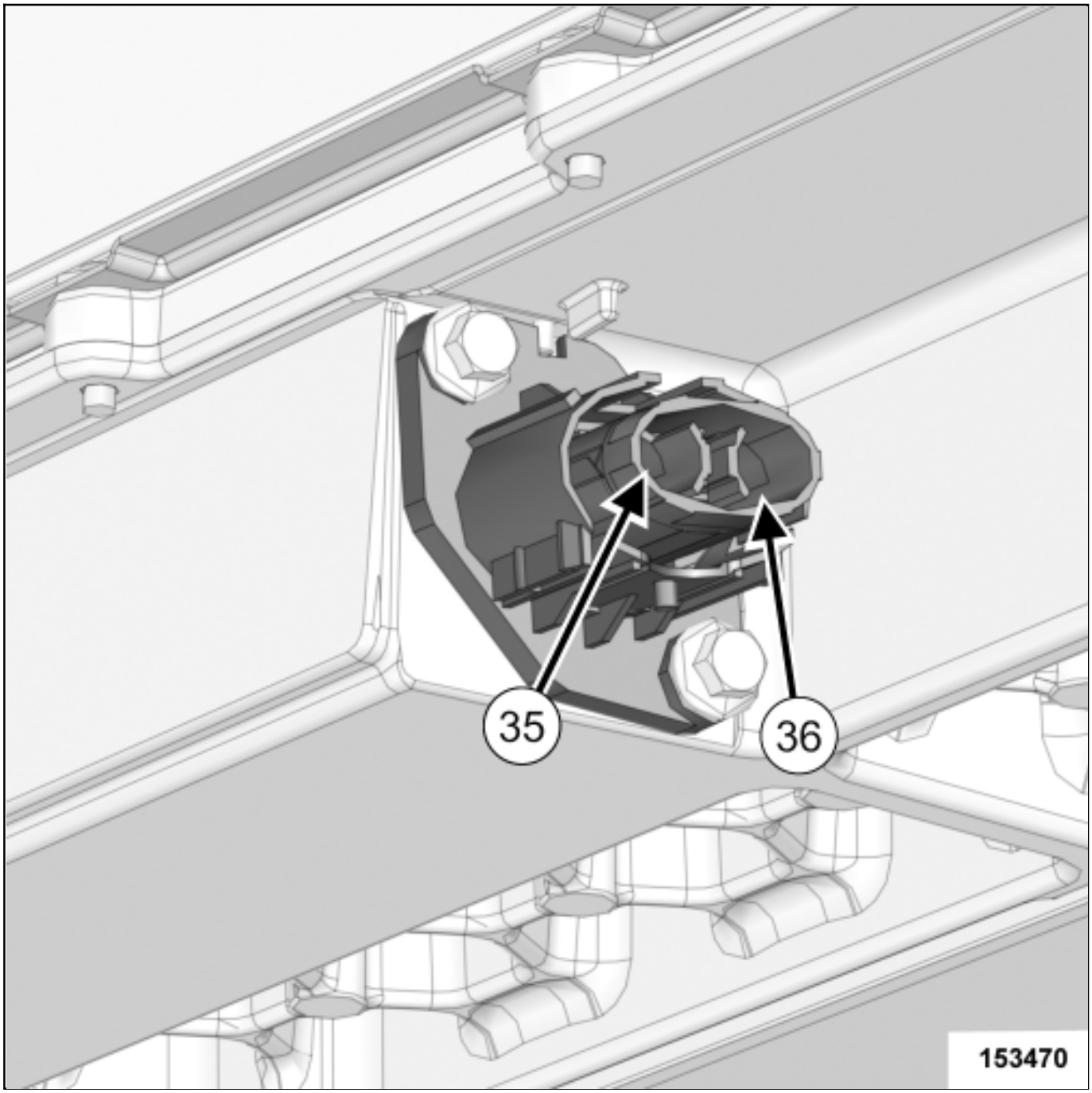

Check that there is no voltage using a voltage detectorVoltage detector(Ele. 1993) :

- between the terminal "+"(33) of the high voltage connector between converter and traction battery and the terminal "+" (35) of the high voltage connector between charger and traction battery,
- between the terminal "+"(33) of the high voltage connector between converter and traction battery and the terminal "-" (36) of the high voltage connector between charger and traction battery,
- between the terminal "-"(34) of the high voltage connector between converter and traction battery and the terminal "+" (35) of the high voltage connector between charger and traction battery,

between the terminal "-"(34) of the high voltage connector between converter and traction battery and the terminal "-" (36) of the high voltage connector between charger and traction battery,

Note:

This operation requires two operators and an extension wire.

Make sure that the voltage detectorVoltage detector(Ele. 1993) is working correctly after measuring.

Refit the protective covers on the 3 connectors.

Proceed in the reverse order to removal.

Repair-14x02x01x90-01x37-1-3-1.xml

TRACTION MOTOR: REMOVAL - REFITTING

Note, one or more warnings are present in this procedure

Equipment required
Diagnostic tool
component jack

WARNING

To avoid all risk of damage to the systems, apply the safety and cleanliness instructions and operation recommendations before carrying out any repair:

- Wiring: Precautions for the repair ,
- Vehicle: Precautions for the repair .

CAUTION

To prevent contamination of disconnected connectors and sockets, hermetically seal the connectors and sockets using a plastic bag and a securing clip. For traction battery sockets, use traction battery caps (see Vehicle: Parts and consumables for the repair)

Vehicle: Parts and consumables for the repair

Location and specification (tightening torques, parts always to be replaced, etc.)(see 10B, Electric machine , Traction motor assembly: Exploded view) .

REMOVAL

1. REMOVAL PREPARATION OPERATION

Position the vehicle on a two-post lift Vehicle: Towing and lifting .

WARNING

DANGER: HIGH VOLTAGE VEHICLE.

Risks of serious burns or electric shock that may prove fatal.

Before carrying out any work on the vehicle, it is essential that you adhere to the instructions regarding vehicle voltage cut-off. This work must be carried out by an employee who is qualified and authorized to work on a high-voltage onboard network Vehicle: Precautions for the repair .

Remove the lockout of the vehicle Vehicle: Lockout - Removal of lockout .

Remove:

- the rear wheels Wheel: Removal - Refitting ,
- the rear bumper trim Exterior body rear trim assembly: Exploded view .

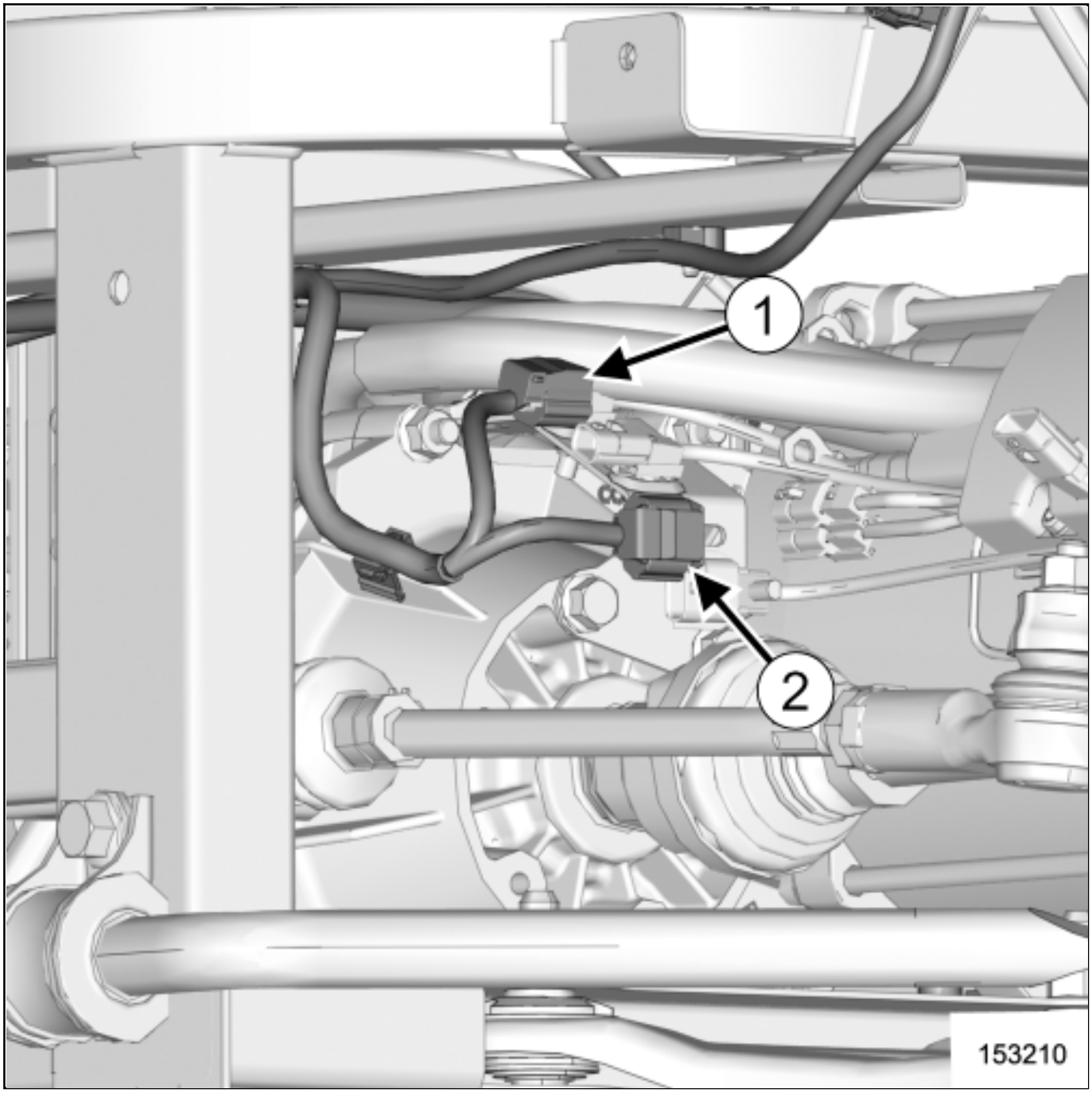

Disconnect:

- the temperature sensor connector(1) ,
- the rotor position sensor connector(2) .

Remove:

- the reducer Electric traction reduction gearing assembly: Exploded view ,
- the traction motor power wiring nuts on the converter(see **Electric vehicle converter assembly: Exploded view**) ,
- the motor ground strap bolt on the traction motor (see 10B, Electric machine , Traction motor assembly: Exploded view) .

2. REMOVAL OPERATION

- Loosen Engine-gearbox unit support assembly: Exploded view :
  - the front suspended engine mounting rubber pad bolt,
  - the front suspended engine mounting support bolts,
  - the right-hand suspended engine mounting rubber pad bolt,
  - the right-hand suspended engine mounting support bolts,
- Fit a wooden shim under the traction motor.
- Remove the front suspended engine mounting bolts loosened Engine-gearbox unit support assembly: Exploded view .
- Position a component jack under under the traction motor.
- Remove the right-hand suspended engine mounting bolts loosened Engine-gearbox unit support assembly: Exploded view .
- Turn and position the traction motor on the component jack.
- Remove the traction motor using the component jack.

- Protect the connectors and sockets Wiring: Precautions for the repair .

REFITTING

1. REFITTING OPERATION

- Proceed in the revese order to removal.

- Connect Electric vehicle converter: Removal - Refitting :
  - the motor power cable with the green mark on converter M1 stud,
  - the motor power cable with the yellow mark on converter M2 stud,
  - the motor power cable with the blue mark on converter M3 stud.

2. FINAL OPERATION

- Lockout the vehicle Vehicle: Lockout - Removal of lockout .

- Carry out the necessary operations using the Diagnostic tool see (Fault finding - Replacement of components) (83A, Instrument panel).

Repair-14x01x01-01x37-1-2-1.xml

XSL version : 3.02 du 22/07/11

TWIZY

2 Transmission

24A CHARGER/CONVERTER

BCB
Vdiag No.: 04

Fault finding - Replacement of components 24A - 2

V1 **Edition Anglaise**

"The repair procedures given by the manufacturer in this document are based on the technical specifications current when it was prepared.

The procedures may be modified as a result of changes introduced by the manufacturer in the production of the various component units and accessories from which his vehicles are constructed."

All rights reserved by Renault s.a.s.

Copying or translating, in part or in full, of this document or use of the service part reference numbering system is forbidden without the prior written authority of Renault s.a.s.

© Renault s.a.s. 2012

1. Fault finding – Introduction

2. Document applicability

This document presents the fault finding method applicable to all computers with the following specifications:

Vehicle(s): **TWIZY**	*Name of computer:* **charger**
Function concerned: **charger/converter**	*Vdiag No.:* **04**

3. Prerequisites for fault finding

Documentation type

Fault finding procedures for the instrument panel:
– Assisted fault finding (integrated into the **diagnostic tool)**, Dialogys.

Wiring Diagrams:
– Visu-Schéma.

Type of diagnostic tools
– CLIP

Special tooling required

Special tooling required:	
Diagnostic tool	
Multimeter	
Elé. 1622	Bornier
Elé. 1681	Universal Bornier

If the information obtained by the diagnostic tool requires the electrical continuity to be checked, connect bornier Elé. 1622 or universal bornier Elé. 1681.

WARNING:
– All checks using bornier **Elé. 1622** or **Elé. 1681** must be carried out with the battery disconnected.
– The bornier is only designed to be used with a multimeter. Never power the test points with **12 V**.

IMPORTANT:

The charger fault finding session is specifically created to carry out computer reprogramming when needed.

The computer does not display any faults, statuses or parameters in this session. To carry out charger fault finding, you must access the instrument panel session.

4. Technical aspects

IMPORTANT:

- **Switch on the diagnostic tool (mains or cigarette lighter supply).**
- **Connect a battery charger. Only use a compatible charger with a nominal voltage of 14.4 Volts and a current limited to 5 Amps. (Type: GYS Inverter 5F and TECMATE OptiMate 6)**
- **Switch off all electrical consumers (lights, heated windscreen, radio etc.).**

The system can be programmed via the diagnostic socket using the **RENAULT CLIP diagnostic tool** (refer to Technical Note 3585A, Computer programming and reprogramming procedure, and follow the instructions provided by the diagnostic tool).

To reprogram the charger, observe the following conditions:

- Disconnect the orange Apex 280 connectors between the charging lead and the charger as well as the connector between the charger and the traction battery.
- Put the vehicle in + after ignition feed position
- Connect the CLIP tool and start the reprogramming procedure

After performing computer reprogramming:

- Reconnect the orange Apex 280 connectors of the charger
- Put the vehicle in + after ignition feed position and check that the vehicle activates correctly (instrument panel MMI and communication with the CLIP tool)
- Check status ET318: CHARGER POWER RELAY is in the CLOSED position
- Check status ET333: VEHICLE STATUS is in the TRACTION position
- Clear the stored faults linked to the disconnection of the Apex 280 connectors

TWIZY

2 Transmission

24A TRACTION BATTERY

PNE
Vdiag No.: 04

Fault finding on the relays 24A - 2

V1 **EDITION ANGLAISE**

"The repair procedures given by the manufacturer in this document are based on the technical specifications current when it was prepared.

The procedures may be modified as a result of changes introduced by the manufacturer in the production of the various component units and accessories from which its vehicles are constructed".

All rights reserved by RENAULT s.a.s.

Copying or translating, in part or in full, of this document or use of the service part reference numbering system is forbidden without the prior written authority of RENAULT s.a.s.

© Renault s.a.s. 2014

MR-456-X09-24A100$000.mif
V1

1. Details of the tools and their operation.

Tool ELE2060, ELE2061 and ELE2031 are used for checking the control of the vehicle relays in its normal operating mode. These tools are also then used to manually check the operation of these relays and check their power output.

2. PIN OUT of tool ELE2060:

1. Track not allocated.
2. Track not allocated.
3. Inverter supply relay output.
4. CAN High
5. CAN Low.
6. Checking the charger power relay.
7. Internal earth within the Charger of the inverter supply relay and charger power relay.
8. Charger power relay control.
9. Inverter supply relay control.
10. Inverter power relay coil supply
11. Low Energy Light Computer supply.
12. Inverter power relay control.

AFTER REPAIR	Follow the instructions.

Fault finding on the "**CHARGER POWER RELAY**"

CONSIGNES	**Special notes:** before using the ELE2060 tool, check that it is in operational condition. (connections, wiring, fuse etc.)

Check the condition of the fuses of component **1016 passenger compartment fuse box** and that of the auxiliary battery.
Put the vehicle in mode + **After ignition feed OFF (deactivated) and charging cable disconnected**. Connect tool **ELE2060** between the vehicle wiring and the **Traction battery component 938**.
Put the vehicle in + **After ignition feed ON** mode. Check the voltage between tracks **7** and **8** to check **the charger power relay control**.
If the voltage is different from the auxiliary battery voltage, put the vehicle in + **After ignition OFF (deactivated) mode and charging cable disconnected**. Check the continuity and insulation between tracks **7** and **8**. If the connection is faulty and if there is a repair procedure (see **Technical Note 6015A (Renault), Repairing electrical wiring, Wiring: Precautions for repair**), repair the wiring, otherwise replace the wiring.
Before continuing, lock out the vehicle and use the appropriate safety equipment, see Technical Note 6037A.
If the connection is not faulty, replace the **Charger component code 2093**.
Connect a cable between tracks **11** and **8** of the breakout board to force **operation of the HT output relay** of the **traction battery**. If possible you may hear the **charger power relay** stick.
Measure the voltage at the connector terminals of tool **ELE2031** (Apex 280). If the voltage is zero, the traction battery output relay is open: • Complete the "**Traction battery control check-sheet**" • Make a **copy of the traction battery ET/PR screen in the ECU Scoreboard** • Before continuing, **lock out the vehicle** and use the appropriate safety equipment, see Technical Note 6037A and the procedure for TWIZY lockout/removal of lockout. • Replace the **Traction battery component 938**.

AFTER REPAIR	Follow the instructions.

Fault finding on the traction battery relays

Fault finding on the "**INVERTER SUPPLY RELAY**"

CONSIGNES	**Special notes:** before using the ELE2060 tool, check that it is in operational condition. (connections, wiring, fuse etc.)

Check the condition of the fuses of component **1016 passenger compartment fuse box** and that of the auxiliary battery.
Put the vehicle in mode + **After ignition feed OFF (deactivated) and charging cable disconnected**. Connect tool **ELE2060** between the vehicle wiring and the **Traction battery component 938**.
Put the vehicle in + **After ignition feed ON** mode. Check the voltage between tracks **7** and **9** to check **the inverter supply relay control**.
If the voltage is different from the auxiliary battery voltage, put the vehicle in + **After ignition OFF (deactivated) mode and charging cable disconnected**. Check the continuity and insulation between tracks **7** and **9**. If the connection is faulty and if there is a repair procedure (see **Technical Note 6015A (Renault), Repairing electrical wiring, Wiring: Precautions for repair**), repair the wiring, otherwise replace the wiring.
Before continuing, lock out the vehicle and use the appropriate safety equipment, see Technical Note 6037A.
If the connection is not faulty, replace the **Charger component code 2093**.
Connect a cable between tracks **11** and **9** of the breakout board to force **operation of the HT output relay** of the **traction battery**. If possible you may hear the **inverter supply relay** stick.
Measure the voltage at terminals **3** and **7** of tool ELE 2060. The voltage should be equal to the traction battery voltage. If the voltage is zero, the traction battery output relay is open: • Complete the "**Traction battery control check-sheet**" • Make a **copy of the traction battery ET/PR screen in the ECU Scoreboard** • Before continuing, **lock out the vehicle** and use the appropriate safety equipment, see Technical Note 6037A and the procedure for TWIZY lockout/removal of lockout. • Replace the **Traction battery component 938**.

AFTER REPAIR	Follow the instructions.

Fault finding on the traction battery relays

Fault finding on the "**INVERTER POWER RELAY**"

CONSIGNES	**Special notes:** before using the ELE2060 tool, check that it is in operational condition. (connections, wiring, fuse etc.)

Check the condition of the fuses of component **1016 passenger compartment fuse box** and that of the auxiliary battery.
Put the vehicle in mode + **After ignition feed OFF (deactivated) and charging cable disconnected**. Connect tool **ELE2060** between the vehicle wiring and the **Traction battery component 938**.
Put the vehicle in **GO (+ START)** mode. Check the voltage between tracks **7** and **12** to check **the inverter power relay control**.
If the voltage is different from the auxiliary battery voltage, put the vehicle in + **After ignition OFF (deactivated) mode and charging cable disconnected**. Check the continuity and insulation between tracks **7** and **12**. If the connection is faulty and if there is a repair procedure (see **Technical Note 6015A (Renault), Repairing electrical wiring, Wiring: Precautions for repair**), repair the wiring, otherwise replace the wiring.
Before continuing, lock out the vehicle and use the appropriate safety equipment, see Technical Note 6037A.
If the connection is not faulty, replace the **inverter component code 1063**.
Connect tool **ELE2061** (RCS800) in place of the connector present between the **938 Traction battery and the inverter 1063**.
Connect a cable between tracks **11** and **8** of the breakout board to force operation of the traction battery HT output relay. If possible you may hear the **inverter power relay** stick.
Measure the voltage at the terminals **of tool ELE2061 between the traction battery and the inverter**. If the voltage is zero, the traction battery output relay is open. • Complete the "**Traction battery control check-sheet**" • Make a **copy of the traction battery ET/PR screen in the ECU Scoreboard** • Before continuing, **lock out the vehicle** and use the appropriate safety equipment, see Technical Note 6037A and the procedure for TWIZY lockout/removal of lockout. • Replace the **Traction battery component 938**.

AFTER REPAIR	Follow the instructions.

Fault finding on the traction battery relays

TRANSMISSIONMODEMANAGEMENTCONTROL:REMOVAL-REFITTING

Note, one or more warnings are present in this procedure

Equipment required
Diagnostic tool

WARNING

To avoid all risk of damage to the systems, apply the safety and cleanliness instructions and operation recommendations before carrying out any repair:

Vehicle: Precautions for the repair .

Localisation and specification (tightening, torques, parts always to be replaced)Dashboard assembly: Exploded view .

REMOVAL

1. REMOVAL PREPARATION OPERATION

WARNING

To avoid any risk of triggering when working on or near a pyrotechnic component (airbags or pretensioners), lock the airbag computer using the diagnostic tool.

When this function is activated, all the trigger lines are inhibited and the airbag warning light on the instrument panel lights up continuously (ignition on).

Lock the airbag computer using the Diagnostic tool(see Fault finding - Replacement of components) (88C, Airbags and pretensioners).

WARNING

DANGER : Risk of serious injuries due to the short-circuiting or the untimely triggering of an electrical system (pyrotechnical parts, windscreen wiper motor, electric fan, etc.) following possible loopback of the 12-volt supply circuit by the voltage transformer.

Please adhere to the instructions regarding cut-off of the 12-volt supply circuit.

If the procedure fails, do not continue with your task and ask an employee who is qualified and authorized to work on a high-voltage onboard network to perform a diagnostic Vehicle: Precautions for the repair .

Disconnect the 12V supply circuit12 V supply circuit : Lockout - Removal of lockout .

Remove:

- the driver's frontal airbagDriver's frontal airbag: Removal - Refitting ,
- the steering wheelSteering assembly: Exploded view ,
- the steering wheel coverDashboard assembly: Exploded view ,
- the left-hand dashboard trimDashboard assembly: Exploded view .

2. REMOVAL OPERATION

Disconnect the transmission mode management switch connector.

Remove the transmission mode management switch by pressing on the clipsDashboard assembly: Exploded view .

REFITTING

1. REFITTING OPERATION

Proceed in the reverse order to removal.

2. FINAL OPERATION

Connect the 12V supply circuit12 V supply circuit : Lockout - Removal of lockout .

Unlock the airbag computer using the Diagnostic tool(see Fault finding - Replacement of components) (88C, Airbags and pretensioners).

TRANSMISSIONMODEMANAGEMENTCONTROL:REMOVAL-REFITTING

Note, one or more warnings are present in this procedure

Equipment required
Diagnostic tool

WARNING

To avoid all risk of damage to the systems, apply the safety and cleanliness instructions and operation recommendations before carrying out any repair:

- Vehicle: Precautions for the repair .

Localisation and specification (tightening, torques, parts always to be replaced)Dashboard assembly: Exploded view .

REMOVAL

1. REMOVAL PREPARATION OPERATION

WARNING

To avoid any risk of triggering when working on or near a pyrotechnic component (airbags or pretensioners), lock the airbag computer using the diagnostic tool.

When this function is activated, all the trigger lines are inhibited and the airbag warning light on the instrument panel lights up continuously (ignition on).

Lock the airbag computer using the Diagnostic tool(see Fault finding - Replacement of components) (88C, Airbags and pretensioners).

WARNING

DANGER : Risk of serious injuries due to the short-circuiting or the untimely triggering of an electrical system (pyrotechnical parts, windscreen wiper motor, electric fan, etc.) following possible loopback of the 12-volt supply circuit by the voltage transformer.

Please adhere to the instructions regarding cut-off of the 12-volt supply circuit.

If the procedure fails, do not continue with your task and ask an employee who is qualified and authorized to work on a high-voltage onboard network to perform a diagnostic Vehicle: Precautions for the repair .

Disconnect the 12V supply circuit12 V supply circuit : Lockout - Removal of lockout .

Remove:

- the driver's frontal airbagDriver's frontal airbag: Removal - Refitting ,
- the steering wheelSteering assembly: Exploded view ,
- the steering wheel coverDashboard assembly: Exploded view ,
- the left-hand dashboard trimDashboard assembly: Exploded view .

2. REMOVAL OPERATION

Disconnect the transmission mode management switch connector.

Remove the transmission mode management switch by pressing on the clipsDashboard assembly: Exploded view .

REFITTING

1. REFITTING OPERATION

Proceed in the reverse order to removal.

2. FINAL OPERATION

Connect the 12V supply circuit12 V supply circuit : Lockout - Removal of lockout .

Unlock the airbag computer using the Diagnostic tool(see Fault finding - Replacement of components) (88C, Airbags and pretensioners).

TWIZY

2 Transmission

24A LITHIUM BATTERY CONTROLLER

LBC
Vdiag no.: 05

Fault finding - System operation 24A - 2

V1 **EDITION ANGLAISE**

"The repair procedures given by the manufacturer in this document are based on the technical specifications current when it was prepared.

The procedures may be modified as a result of changes introduced by the manufacturer in the production of the various component units and accessories from which its vehicles are constructed".

All rights reserved by RENAULT s.a.s.

Copying or translating, in part or in full, of this document or use of the service part reference numbering system is forbidden without the prior written authority of RENAULT s.a.s.

© Renault s.a.s. 2014

Contents:

Contents

Fault finding – Introduction ... 3
- **1.1. Scope of this document** ... 3
- **1.2. Prerequisites for fault finding** ... 3
- **1.3. Recap** ... 4
- **1.4. Fault finding procedure** ... 5
- **1.5. Safety instructions** ... 6
- **1.6. Representation of the interior of a module** ... 7
- **1.7. Pinout of the BMS connectors** ... 8
- **1.8. Identification of the modules, the cells and the pinout (40 pins) of the BMS for reading the voltage** ... 9

2. Faults related to the Instrument Panel ... 10
- **2.1. Tables of temperature sensor values:** ... 12

3. Fault Finding - Symptom ... 95

PRELI	

Fault finding – Introduction

1.1. Document applicability

This document presents the fault finding method applicable to all computers with the following specifications:

Vehicle(s): **TWIZY** *Function involved:* **Instrument panel, Inverter, Charger/converter, Traction battery**	*Name of computer:* **LBC** *Vdiag No:* **05**

1.2. Prerequisites for fault finding

Documentation type

Fault finding procedures (this manual):
- Dialogys.

Wiring Diagrams:
- Visu-Schéma.

Type of diagnostic tools
- **CLIP**

PRELI	

1.3 Recap

Procedure

To run diagnostics on the vehicle computers, switch on the ignition using the key.

Faults

Faults are declared present or stored (depending on whether they appeared in a certain context and have disappeared since, or whether they remain present but are not diagnosed within the current context).

The **present** or **stored** status of faults should be taken into consideration when the **diagnostic tool** is used after switching on the **+ after ignition feed** (without activating the system components).

For a **present fault**, apply the procedure described in the **Interpretation of faults** section.

For a **stored fault**, note the faults displayed and apply the **Notes** section.

If the fault is **confirmed** when the instructions are applied, the fault is present. Deal with the fault.

If the fault is **not confirmed**, check:
– the electrical lines which correspond to the fault,
– the connectors on these lines (corrosion, bent pins, etc.),
– the **resistance** of the faulty component,
– the condition of the wires (melted or cut insulation, wear).

Conformity Check

The aim of the conformity check is to check the statuses and parameters that do not produce a fault display on **the diagnostic tool** when they are inconsistent. Therefore, this stage is used to:

– carry out fault finding on faults that do not have a fault display, and which may correspond to a customer complaint,
– check that the system is operating correctly and that there is no risk of a fault recurring after repair.

This section gives the fault finding procedures for statuses and parameters and the conditions for checking them.

If a status is not behaving normally or a parameter is outside permitted tolerance values, you should consult the corresponding fault finding page.

Customer complaints - Fault finding chart

If the test with the **diagnostic tool** is OK but the customer complaint is still present, the fault should be processed by **customer complaints**.

A summary of the general procedure to follow is provided on the following page in the form of a flow chart

PRELI	

1.4. Fault finding procedure

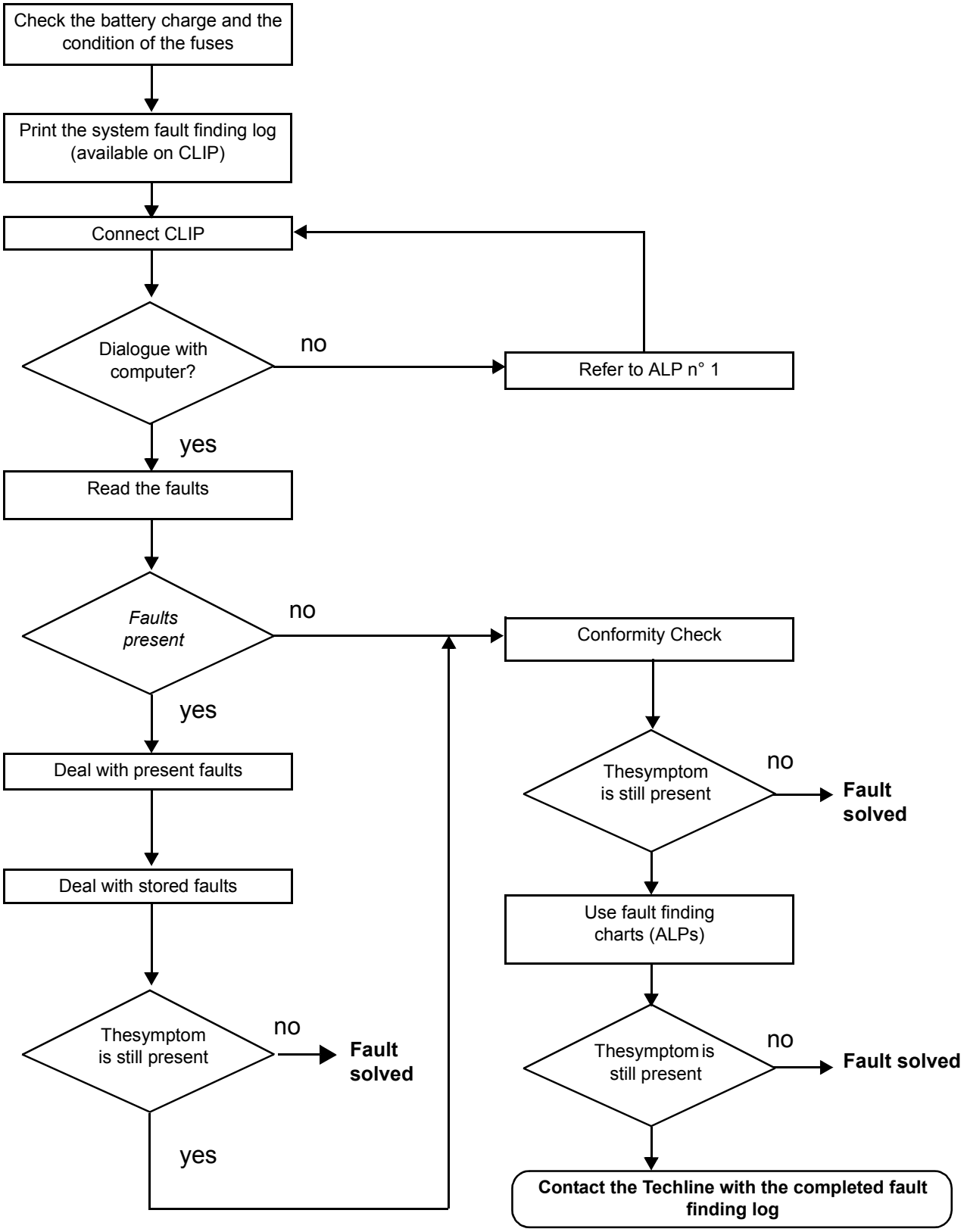

PRELI	

1.5. Safety advice

The safety instructions must be followed at all times when working on components, to avoid damage or injury:

– check the battery voltage to avoid incorrect operation of computer functions,
– The drive system of an electric vehicle uses a DC voltage of approximately 60 volts. This system may be hot during and after switching off the ignition. Respect the warning messages on the labels present inside the vehicle.
  The electric circuit can be recognised by the orange colour wiring and the components marked with the symbol ⚡.
– use the appropriate tools:

– Remove all metal jewellery (wedding rings, bracelets, watches) or any item likely to be a conductor.

PRELI	

40 pin BMS connector:

M7-0	M7_THH	M6-THH	M6-2	M6-1	M5-THH	M5-2	M5-0	M4-2	M4-0	M4-THH	M3-2	M3-0	M3-THH	M2-2	M2-0	M2-THH	M1-2	M1-0	M1-THH
20	19	18	17	16	15	14	13	12	11	10	9	8	7	6	5	4	3	2	1
40	39	38	37	36	35	34	33	32	31	30	29	28	27	26	25	24	23	22	21
M7-2	M7-1	M7_THGND	M6_THGND	M6-0	M5_THGND	X	M5-1	X	M4-1	X	M4_THGND	M3-1	X	M3_THGND	M2-1	X	M2_THGND	M1-1	M1_THGND

M1-0: The (-) terminal of cell 1 of Module 1 which is also the (-) Terminal of Module 1
M1-1: The (+) terminal of cell 1 of Module 1 and also the (-) Terminal of cell 2 of module 1
M1-2: The (+) terminal of cell 2 of module 1 which is also the (+) Terminal of Module 1

M1-THH: The (+) terminal of the thermistor (Temperature Sensor of module 1)
M1-THGND: The (-) terminal of the thermistor (Temperature Sensor of module 1)

The operation is repeated for the 7 modules of the battery pack.

1.6. Representation of the interior of a module

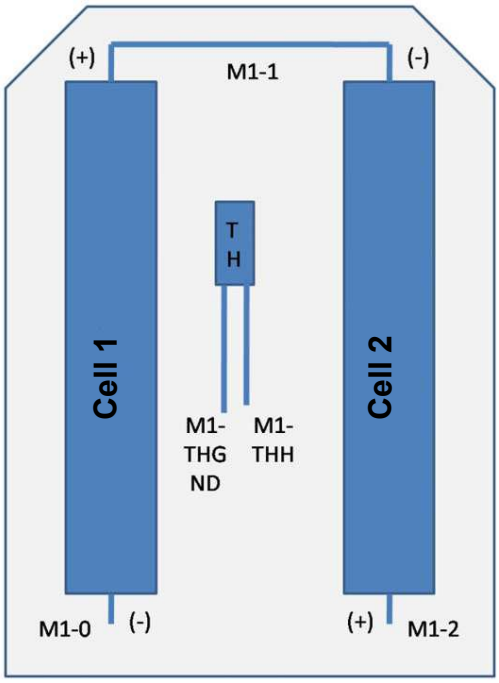

PRELI	

Module connector:

4	3	2	1
M-TH_GND			M#_0
M#_2		M#_1	M_TH_H
8	7	6	5

1.7. Pinout of the BMS connectors

24 pin BMS connector:

CS_Vs	CS1	Not Used	Interlock In	Interlock Out	HVIL_OUT	HVIL-IN	Not Used	CAN_A_H	Not Used	Stop Charge Request	V_auxbatt
12	11	10	9	8	7	6	5	4	3	2	1
24	23	22	21	20	19	18	17	16	15	14	13
CS_GND	Not Used	Not Used	Not Used	Not Used	Not Used	Not Used	Not Used	CAN_A_L	Not Used	Not Used	GND

PRELI	

1.8. Identification of the modules, the cells and the pinout (40 pin) of the BMS for reading voltage.

Module No.	Cell No.	Voltage measurement
1	1	Pin No. 2/Pin No. 22
	2	Pin No. 22/Pin No. 3
2	3	Pin No. 5/Pin No. 25
	4	Pin No. 25/Pin No. 6
3	5	Pin No. 8/Pin No. 28
	6	Pin No. 28/Pin No. 9
4	7	Pin No. 11/Pin No. 31
	8	Pin No. 31/Pin No. 12
5	9	Pin No. 13/Pin No. 33
	10	Pin No. 33/Pin No. 14
6	11	Pin No. 36/Pin No. 16
	12	Pin No. 16/Pin No. 17
7	13	Pin No. 20/Pin No. 39
	14	Pin No. 39/Pin No. 40

PRELI	

2. Tables of temperature sensor values:

Temperature (°C)	Resistance (KΩ)
0	27,7
1	26,51
2	25,37
3	24,29
4	23,27
5	22,29
6	21,36
7	20,48
8	19,64
9	18,83
10	18,07
11	17,34
12	16,64
13	15,98
14	15,34
15	14,74
16	14,16
17	13,61
18	13,09
19	12,59
20	12,11
21	11,65
22	11,21
23	10,79
24	10,38
25	10
26	9,63
27	9,275
28	8,936
29	8,611
30	8,301
31	8,001

Temperature (°C)	Resistance (KΩ)
32	7,715
33	7,44
34	7,177
35	6,925
36	6,683
37	6,451
38	6,229
39	6,016
40	5,811
41	5,613
42	5,422
43	5,24
44	5,064
45	4,896
46	4,734
47	4,579
48	4,429
49	4,285
50	4,147
51	4,013
52	3,884
53	3,76
54	3,64
55	3,525
56	3,415
57	3,308
58	3,205
59	3,106
60	3,011
61	2,919
62	2,83
63	2,744

Temperature (°C)	Resistance (KΩ)
64	2,662
65	2,582
66	2,505
67	2,431
68	2,36
69	2,291
70	2,224
71	2,16
72	2,097
73	2,037
74	1,979
75	1,922
76	1,868
77	1,815
78	1,765
79	1,716
80	1,668
81	1,622
82	1,577
83	1,534
84	1,492
85	1,451
86	1,412
87	1,374
88	1,337
89	1,301
90	1,267

PRELI	

PERFORMANCE OF AN ELECTRIC TEST

After each repair this operation is compulsory in order to ensure the correct operation of the battery pack.

If the result of the test is negative, the battery must not leave the repair centre.

Description of the electrical test:

Connect tool ELE2060 and carry out the tests below

1 - Connect a cable between pins 11 and 8 of the breakout box to force the traction battery HT output relay to operate. If possible you may hear the charger power relay stick.

Measure the voltage at the connector terminals of tool ELE2031 (Apex 280). The voltage should be equal to the battery voltage.

At the end of the test, open the relay.

2 - Connect a cable between pins 11 and 9 of the breakout box to force the traction battery HT output relay to operate. If possible you may hear the inverter supply relay stick.

Measure the voltage at terminals 3 and 7 of tool ELE2060.
The voltage should be equal to the battery pack voltage.

At the end of the test, open the relay.

3 - Connect a cable between pins 11 and 8 of the breakout box to force the traction battery HT output relay to operate. If possible you may hear the inverter power relay stick.

Measure the voltage across the terminals of tool ELE2061 at the terminals of the power output of connector RCS800.
The voltage should be equal to the battery pack voltage

At the end of the test, open the relay.

4 - Charge the pack on the Electric Vehicle to +5%.

5 - Discharge the pack by -5%.

PRELI	

LIST OF FAULT PROCEDURES

Before dealing with each fault:

The battery packs come with a monitoring sheet and a Customer Incident Report (CIR).

Edit the CIR to note the customer complaint and the reason for removal. It is sometimes necessary to go through the CIR to find information on the behaviour of the battery pack on an electric vehicle (EV).

The first check to be made when receiving a battery is a visual inspection of the battery pack assembly (physical condition of the battery pack, power connectors, signal connector etc.)

2.1. Faults related to the Instrument Panel

TOOL FAULT	DTC	DIAGNOSTIC TOOL DESCRIPTION
DF551	3/2	CELL OVERVOLTAGE
DF158	3/87	CELL OVERVOLTAGE
DF240	3/17	CELL OVERVOLTAGE
DF144	3/19	BATTERY TRAY EXCESS VOLTAGE LEVEL 1
DF145	3/20	BATTERY TRAY EXCESS VOLTAGE LEVEL 2
DF249	3/88	CELL UNDERVOLTAGE
DF250	3/35	CELL UNDERVOLTAGE
DF251	3/36	CELL UNDERVOLTAGE
DF252	3/89	CELL UNDERVOLTAGE
DF146	3/51	BATTERY TRAY UNDERVOLTAGE LEVEL 1
DF147	3/52	BATTERY TRAY UNDERVOLTAGE LEVEL 2
DF148	3/53	BATTERY TRAY UNDERVOLTAGE LEVEL 3
DF113	3/54	TRACTION BATTERY TRAY TEMPERATURE
DF372	3/55	TRACTION BATTERY TRAY TEMPERATURE
DF373	3/56	TRACTION BATTERY TRAY TEMPERATURE
DF404	3/86	60 V BATTERY
DF166	3/57	CELL VOLTAGE DIFFERENCE WHEN STARTING

PRELI	

DF149	3/58	BATTERY TRAY CURRENT
DF377	3/59	BATTERY TRAY CURRENT
DF114	3/60	PEB INTERLOCK
DF153	3/61	BCB INTERLOCK
DF540	3/62	LBC
DF168	3/80	CELL LINE UNDERVOLTAGE
DF167	3/63	INCONSISTENCY BETWEEN CELL AND MODULE VOLTAGE
DF543	3/90	LBC
DF215	3/85	TEMPERATURE SENSOR CIRCUIT

PRELI	

DF551 DTC3/2 PRESENT OR STORED	CELL OVERVOLTAGE

CONSIGNES	**Special notes:** The charging of the battery pack stops **Note:** one of the battery cells is overloaded and has reached 4.18 V

If the fault is stored: reproduce the fault by charging the battery pack using the vehicle.
Check the voltage of the cells using the parameters for reading the voltage of the cells in the LBC computer. Note the number of the cell showing excess voltage above 4.18 V.
Open the battery pack and remove the bar plug in order to reach the terminals of the modules.
Check the voltage of the module located using a multimeter and compare it with the value measured with the Clip. If the module shows excess voltage, replace the unit concerned with a module balanced with the voltage of the other modules.
If the module does not show excess voltage, check **the continuity and insulation between the** following connections: • **Pin 1** of the module connector (8 pin connector) • **Pin 2** of the 40 pin BMS connector for **module 1** (cell 1 and 2) • **Pin 5** of the 40 pin BMS connector for **module 2** (cell 3 and 4) • **Pin 8** of the 40 pin BMS connector for **module 3** (cells 5 and 6) • **Pin 11** of the 40 pin BMS connector for **module 4** (cells 7 and 8) • **Pin 13** of the 40 pin BMS connector for **module 5** (cells 9 and 10) • **Pin 36** of the 40 pin BMS connector for **module 6** (cells 11 and 12) • **Pin 20** of the 40 pin BMS connector for **module 7** (cells 13 and 14) Then check the continuity and the insulation of the following connections: • **Pin 6** of the module connector (8 pin connector) • **Pin 22** of the BMS 40 pin connector for **module 1** (cell 1 and 2) • **Pin 25** of the BMS 40 pin connector for **module 2** (cell 3 and 4) • **Pin 28** of the 40 pin BMS connector for **module 3** (cells 5 and 6) • **Pin 31** of the 40 pin BMS connector for **module 4** (cells 7 and 8) • **Pin 33** of the 40 pin BMS connector for **module 5** (cells 9 and 10) • **Pin 16** of the 40 pin BMS connector for **module 6** (cells 11 and 12) • **Pin 39** of the 40 pin BMS connector for **module 7** (cells 13 and 14)

PRELI	

Finally check the insulation and continuity of the following connections: • **Pin 8** of the module connector (8 pin connector) • **Pin 3** of the BMS 40 pin connector for **module 1** (cell 1 and 2) • **Pin 6** of the BMS 40 pin connector for **module 2** (cell 3 and 4) • **Pin 9** of the 40 pin BMS connector for **module 3** (cells 5 and 6) • **Pin 12** of the 40 pin BMS connector for **module 4** (cells 7 and 8) • **Pin 14** of the 40 pin BMS connector for **module 5** (cells 9 and 10) • **Pin 17** of the 40 pin BMS connector for **module 6** (cells 11 and 12) • **Pin 40** of the 40 pin BMS connector for **module 7** (cells 13 and 14) If the connection is faulty and if there is a repair procedure (see **Technical Note 6015A (Renault), Repairing electrical wiring, Wiring: Precautions for repair**), repair the wiring, otherwise replace the wiring.
If the connection is not faulty, replace the **LBC computer component code 938**.
Refit the battery pack and carry out an electrical test.

AFTER REPAIR	Follow the instructions.

DF577 DTC3/3 PRESENT OR STORED	BATTERY CELL NO. 1 VOLTAGE

CONSIGNES	**Special notes:** Cell excess voltage **Note:** one of the battery cells is overloaded and has exceeded 4.2 V. STOP warning light illuminated and traction impossible

If the fault is stored: reproduce the fault by charging the battery pack using the vehicle.
Open the battery pack and remove the bar plug in order to reach the terminals of the modules.
Check the voltage of the cell at fault using a multimeter and compare it with the value measured with the Clip. If the module shows excess voltage, replace the unit concerned with a module balanced with the voltage of the other modules.
If the module does not show excess voltage, check **the continuity and insulation between the** following connections: • **Pin 1** of the module connector (8 pin connector) • **Pin 2** of the 40 pin BMS connector for **module 1** (cell 1 and 2) Then check the continuity and the insulation of the following connections: • **Pin 6** of the module connector (8 pin connector) • **Pin 22** of the BMS 40 pin connector for **module 1** (cell 1 and 2) Finally check the insulation and continuity of the following connections: • **Pin 8** of the module connector (8 pin connector) • **Pin 3** of the BMS 40 pin connector for **module 1** (cell 1 and 2) If the connection is faulty and if there is a repair procedure (see **Technical Note 6015A (Renault), Repairing electrical wiring, Wiring: Precautions for repair**), repair the wiring, otherwise replace the wiring.
If the connection is not faulty, replace the **LBC computer component code 938**.
Refit the battery pack and carry out an electrical test.

AFTER REPAIR	Follow the instructions.

DF578 DTC3/4 PRESENT OR STORED	BATTERY CELL NO. 2 VOLTAGE

CONSIGNES	**Special notes:** Cell excess voltage **Note:** one of the battery cells is overloaded and has exceeded 4.2 V. STOP warning light illuminated and traction impossible

If the fault is stored: reproduce the fault by charging the battery pack using the vehicle.
Open the battery pack and remove the bar plug in order to reach the terminals of the modules.
Check the voltage of the cell at fault using a multimeter and compare it with the value measured with the Clip. If the module shows excess voltage, replace the unit concerned with a module balanced with the voltage of the other modules.
If the module does not show excess voltage, check **the continuity and insulation between the** following connections: • **Pin 1** of the module connector (8 pin connector) • **Pin 2** of the 40 pin BMS connector for **module 1** (cell 1 and 2) Then check the continuity and the insulation of the following connections: • **Pin 6** of the module connector (8 pin connector) • **Pin 22** of the BMS 40 pin connector for **module 1** (cell 1 and 2) Finally check the insulation and continuity of the following connections: • **Pin 8** of the module connector (8 pin connector) • **Pin 3** of the BMS 40 pin connector for **module 1** (cell 1 and 2) If the connection is faulty and if there is a repair procedure (see **Technical Note 6015A (Renault), Repairing electrical wiring, Wiring: Precautions for repair**), repair the wiring, otherwise replace the wiring.
If the connection is not faulty, replace the **LBC computer component code 938**.
Refit the battery pack and carry out an electrical test.

AFTER REPAIR	Follow the instructions.

DF579 DTC3/5 PRESENT OR STORED	BATTERY CELL NO. 3 VOLTAGE

CONSIGNES	**Special notes:** Cell excess voltage **Note:** one of the battery cells is overloaded and has exceeded 4.2 V. STOP warning light illuminated and traction impossible

If the fault is stored: reproduce the fault by charging the battery pack using the vehicle.
Open the battery pack and remove the bar plug in order to reach the terminals of the modules.
Check the voltage of the cell at fault using a multimeter and compare it with the value measured with the Clip. If the module shows excess voltage, replace the unit concerned with a module balanced with the voltage of the other modules.
If the module does not show excess voltage, check **the continuity and insulation between the** following connections: • **Pin 1** of the module connector (8 pin connector) • **Pin 5** of the 40 pin BMS connector for **module 2** (cell 3 and 4) Then check the continuity and the insulation of the following connections: • **Pin 6** of the module connector (8 pin connector) • **Pin 25** of the BMS 40 pin connector for **module 2** (cell 3 and 4) Finally check the insulation and continuity of the following connections: • **Pin 8** of the module connector (8 pin connector) • **Pin 6** of the BMS 40 pin connector for **module 2** (cell 3 and 4) If the connection is faulty and if there is a repair procedure (see **Technical Note 6015A (Renault), Repairing electrical wiring, Wiring: Precautions for repair**), repair the wiring, otherwise replace the wiring.
If the connection is not faulty, replace the **LBC computer component code 938**.
Refit the battery pack and carry out an electrical test.

AFTER REPAIR	Follow the instructions.

DF580 DTC3/6 PRESENT OR STORED	BATTERY CELL NO. 4 VOLTAGE

CONSIGNES	**Special notes:** Cell excess voltage **Note:** one of the battery cells is overloaded and has exceeded 4.2 V. STOP warning light illuminated and traction impossible

If the fault is stored: reproduce the fault by charging the battery pack using the vehicle.
Open the battery pack and remove the bar plug in order to reach the terminals of the modules.
Check the voltage of the cell at fault using a multimeter and compare it with the value measured with the Clip. If the module shows excess voltage, replace the unit concerned with a module balanced with the voltage of the other modules.
If the module does not show excess voltage, check **the continuity and insulation between the** following connections: • **Pin 1** of the module connector (8 pin connector) • **Pin 5** of the 40 pin BMS connector for **module 2** (cell 3 and 4) Then check the continuity and the insulation of the following connections: • **Pin 6** of the module connector (8 pin connector) • **Pin 25** of the BMS 40 pin connector for **module 2** (cell 3 and 4) Finally check the insulation and continuity of the following connections: • **Pin 8** of the module connector (8 pin connector) • **Pin 6** of the BMS 40 pin connector for **module 2** (cell 3 and 4) If the connection is faulty and if there is a repair procedure (see **Technical Note 6015A (Renault), Repairing electrical wiring, Wiring: Precautions for repair**), repair the wiring, otherwise replace the wiring.
If the connection is not faulty, replace the **LBC computer component code 938**.
Refit the battery pack and carry out an electrical test.

AFTER REPAIR	Follow the instructions.

DF581 DTC3/7 PRESENT OR STORED	BATTERY CELL NO. 5 VOLTAGE

CONSIGNES	**Special notes:** Cell excess voltage **Note:** one of the battery cells is overloaded and has exceeded 4.2 V. STOP warning light illuminated and traction impossible

If the fault is stored: reproduce the fault by charging the battery pack using the vehicle.
Open the battery pack and remove the bar plug in order to reach the terminals of the modules.
Check the voltage of the cell at fault using a multimeter and compare it with the value measured with the Clip. If the module shows excess voltage, replace the unit concerned with a module balanced with the voltage of the other modules.
If the module does not show excess voltage, check **the continuity and insulation between the** following connections: • **Pin 1** of the module connector (8 pin connector) • **Pin 8** of the 40 pin BMS connector for **module 3** (cells 5 and 6) Then check the continuity and the insulation of the following connections: • **Pin 6** of the module connector (8 pin connector) • **Pin 28** of the 40 pin BMS connector for **module 3** (cells 5 and 6) Finally check the insulation and continuity of the following connections: • **Pin 8** of the module connector (8 pin connector) • **Pin 9** of the 40 pin BMS connector for **module 3** (cells 5 and 6) If the connection is faulty and if there is a repair procedure (see **Technical Note 6015A (Renault), Repairing electrical wiring, Wiring: Precautions for repair**), repair the wiring, otherwise replace the wiring.
If the connection is not faulty, replace the **LBC computer component code 938**.
Refit the battery pack and carry out an electrical test.

AFTER REPAIR	Follow the instructions.

DF582 DTC3/8 PRESENT OR STORED	BATTERY CELL NO. 6 VOLTAGE

CONSIGNES	**Special notes:** Cell excess voltage **Note:** one of the battery cells is overloaded and has exceeded 4.2 V. STOP warning light illuminated and traction impossible

If the fault is stored: reproduce the fault by charging the battery pack using the vehicle.
Open the battery pack and remove the bar plug in order to reach the terminals of the modules.
Check the voltage of the cell at fault using a multimeter and compare it with the value measured with the Clip. If the module shows excess voltage, replace the unit concerned with a module balanced with the voltage of the other modules.
If the module does not show excess voltage, check **the continuity and insulation between the** following connections: • **Pin 1** of the module connector (8 pin connector) • **Pin 8** of the 40 pin BMS connector for **module 3** (cells 5 and 6) Then check the continuity and the insulation of the following connections: • **Pin 6** of the module connector (8 pin connector) • **Pin 28** of the 40 pin BMS connector for **module 3** (cells 5 and 6) Finally check the insulation and continuity of the following connections: • **Pin 8** of the module connector (8 pin connector) • **Pin 9** of the 40 pin BMS connector for **module 3** (cells 5 and 6) If the connection is faulty and if there is a repair procedure (see **Technical Note 6015A (Renault), Repairing electrical wiring, Wiring: Precautions for repair**), repair the wiring, otherwise replace the wiring.
If the connection is not faulty, replace the **LBC computer component code 938**.
Refit the battery pack and carry out an electrical test.

AFTER REPAIR	Follow the instructions.

DF583 DTC3/9 PRESENT OR STORED	BATTERY CELL NO. 7 VOLTAGE

CONSIGNES	**Special notes:** Cell excess voltage **Note:** one of the battery cells is overloaded and has exceeded 4.2 V. STOP warning light illuminated and traction impossible

If the fault is stored: reproduce the fault by charging the battery pack using the vehicle.
Open the battery pack and remove the bar plug in order to reach the terminals of the modules.
Check the voltage of the cell at fault using a multimeter and compare it with the value measured with the Clip. If the module shows excess voltage, replace the unit concerned with a module balanced with the voltage of the other modules.
If the module does not show excess voltage, check **the continuity and insulation between the** following connections: • **Pin 1** of the module connector (8 pin connector) • **Pin 11** of the 40 pin BMS connector for **module 4** (cells 7 and 8) Then check the continuity and the insulation of the following connections: • **Pin 6** of the module connector (8 pin connector) • **Pin 31** of the 40 pin BMS connector for **module 4** (cells 7 and 8) Finally check the insulation and continuity of the following connections: • **Pin 8** of the module connector (8 pin connector) • **Pin 12** of the 40 pin BMS connector for **module 4** (cells 7 and 8) If the connection is faulty and if there is a repair procedure (see **Technical Note 6015A (Renault), Repairing electrical wiring, Wiring: Precautions for repair**), repair the wiring, otherwise replace the wiring.
If the connection is not faulty, replace the **LBC computer component code 938**.
Refit the battery pack and carry out an electrical test.

AFTER REPAIR	Follow the instructions.

DF584 DTC3/10 PRESENT OR STORED	BATTERY CELL NO. 8 VOLTAGE

CONSIGNES	**Special notes:** Cell excess voltage **Note:** one of the battery cells is overloaded and has exceeded 4.2 V. STOP warning light illuminated and traction impossible

If the fault is stored: reproduce the fault by charging the battery pack using the vehicle.
Open the battery pack and remove the bar plug in order to reach the terminals of the modules.
Check the voltage of the cell at fault using a multimeter and compare it with the value measured with the Clip. If the module shows excess voltage, replace the unit concerned with a module balanced with the voltage of the other modules.
If the module does not show excess voltage, check **the continuity and insulation between the** following connections: • **Pin 1** of the module connector (8 pin connector) • **Pin 11** of the 40 pin BMS connector for **module 4** (cells 7 and 8) Then check the continuity and the insulation of the following connections: • **Pin 6** of the module connector (8 pin connector) • **Pin 31** of the 40 pin BMS connector for **module 4** (cells 7 and 8) Finally check the insulation and continuity of the following connections: • **Pin 8** of the module connector (8 pin connector) • **Pin 12** of the 40 pin BMS connector for **module 4** (cells 7 and 8) If the connection is faulty and if there is a repair procedure (see **Technical Note 6015A (Renault), Repairing electrical wiring, Wiring: Precautions for repair**), repair the wiring, otherwise replace the wiring.
If the connection is not faulty, replace the **LBC computer component code 938**.
Refit the battery pack and carry out an electrical test.

AFTER REPAIR	Follow the instructions.

DF585 DTC3/11 PRESENT OR STORED	BATTERY CELL NO. 9 VOLTAGE

CONSIGNES	**Special notes:** Cell excess voltage **Note:** one of the battery cells is overloaded and has exceeded 4.2 V. STOP warning light illuminated and traction impossible

If the fault is stored: reproduce the fault by charging the battery pack using the vehicle.
Open the battery pack and remove the bar plug in order to reach the terminals of the modules.
Check the voltage of the cell at fault using a multimeter and compare it with the value measured with the Clip. If the module shows excess voltage, replace the unit concerned with a module balanced with the voltage of the other modules.
If the module does not show excess voltage, check **the continuity and insulation between the** following connections: • **Pin 1** of the module connector (8 pin connector) • **Pin 13** of the 40 pin BMS connector for **module 5** (cells 9 and 10) Then check the continuity and the insulation of the following connections: • **Pin 6** of the module connector (8 pin connector) • **Pin 33** of the 40 pin BMS connector for **module 5** (cells 9 and 10) Finally check the insulation and continuity of the following connections: • **Pin 8** of the module connector (8 pin connector) • **Pin 14** of the 40 pin BMS connector for **module 5** (cells 9 and 10) If the connection is faulty and if there is a repair procedure (see **Technical Note 6015A (Renault), Repairing electrical wiring, Wiring: Precautions for repair**), repair the wiring, otherwise replace the wiring.
If the connection is not faulty, replace the **LBC computer component code 938**.
Refit the battery pack and carry out an electrical test.

AFTER REPAIR	Follow the instructions.

DF586 DTC3/12 PRESENT OR STORED	BATTERY CELL NO. 10 VOLTAGE

CONSIGNES	**Special notes:** Cell excess voltage **Note:** one of the battery cells is overloaded and has exceeded 4.2 V. STOP warning light illuminated and traction impossible

If the fault is stored: reproduce the fault by charging the battery pack using the vehicle.
Open the battery pack and remove the bar plug in order to reach the terminals of the modules.
Check the voltage of the cell at fault using a multimeter and compare it with the value measured with the Clip. If the module shows excess voltage, replace the unit concerned with a module balanced with the voltage of the other modules.
If the module does not show excess voltage, check **the continuity and insulation between the** following connections: • **Pin 1** of the module connector (8 pin connector) • **Pin 13** of the 40 pin BMS connector for **module 5** (cells 9 and 10) Then check the continuity and the insulation of the following connections: • **Pin 6** of the module connector (8 pin connector) • **Pin 33** of the 40 pin BMS connector for **module 5** (cells 9 and 10) Finally check the insulation and continuity of the following connections: • **Pin 8** of the module connector (8 pin connector) • **Pin 14** of the 40 pin BMS connector for **module 5** (cells 9 and 10) If the connection is faulty and if there is a repair procedure (see **Technical Note 6015A (Renault), Repairing electrical wiring, Wiring: Precautions for repair**), repair the wiring, otherwise replace the wiring.
If the connection is not faulty, replace the **LBC computer component code 938**.
Refit the battery pack and carry out an electrical test.

AFTER REPAIR	Follow the instructions.

DF587 DTC3/13 PRESENT OR STORED	BATTERY CELL NO. 11 VOLTAGE

CONSIGNES	**Special notes:** Cell excess voltage **Note:** one of the battery cells is overloaded and has exceeded 4.2 V. STOP warning light illuminated and traction impossible

If the fault is stored: reproduce the fault by charging the battery pack using the vehicle.
Open the battery pack and remove the bar plug in order to reach the terminals of the modules.
Check the voltage of the cell at fault using a multimeter and compare it with the value measured with the Clip. If the module shows excess voltage, replace the unit concerned with a module balanced with the voltage of the other modules.
If the module does not show excess voltage, check **the continuity and insulation between the** following connections: • **Pin 1** of the module connector (8 pin connector) • **Pin 36** of the 40 pin BMS connector for **module 6** (cells 11 and 12) Then check the continuity and the insulation of the following connections: • **Pin 6** of the module connector (8 pin connector) • **Pin 16** of the 40 pin BMS connector for **module 6** (cells 11 and 12) Finally check the insulation and continuity of the following connections: • **Pin 8** of the module connector (8 pin connector) • **Pin 17** of the 40 pin BMS connector for **module 6** (cells 11 and 12) If the connection is faulty and if there is a repair procedure (see **Technical Note 6015A (Renault), Repairing electrical wiring, Wiring: Precautions for repair**), repair the wiring, otherwise replace the wiring.
If the connection is not faulty, replace the **LBC computer component code 938**.
Refit the battery pack and carry out an electrical test.

AFTER REPAIR	Follow the instructions.

DF588 DTC3/14 PRESENT OR STORED	BATTERY CELL NO. 12 VOLTAGE

CONSIGNES	**Special notes:** Cell excess voltage **Note:** one of the battery cells is overloaded and has exceeded 4.2 V. STOP warning light illuminated and traction impossible

If the fault is stored: reproduce the fault by charging the battery pack using the vehicle.
Open the battery pack and remove the bar plug in order to reach the terminals of the modules.
Check the voltage of the cell at fault using a multimeter and compare it with the value measured with the Clip. If the module shows excess voltage, replace the unit concerned with a module balanced with the voltage of the other modules.
If the module does not show excess voltage, check **the continuity and insulation between the** following connections: • **Pin 1** of the module connector (8 pin connector) • **Pin 36** of the 40 pin BMS connector for **module 6** (cells 11 and 12) Then check the continuity and the insulation of the following connections: • **Pin 6** of the module connector (8 pin connector) • **Pin 16** of the 40 pin BMS connector for **module 6** (cells 11 and 12) Finally check the insulation and continuity of the following connections: • **Pin 8** of the module connector (8 pin connector) • **Pin 17** of the 40 pin BMS connector for **module 6** (cells 11 and 12) If the connection is faulty and if there is a repair procedure (see **Technical Note 6015A (Renault), Repairing electrical wiring, Wiring: Precautions for repair**), repair the wiring, otherwise replace the wiring.
If the connection is not faulty, replace the **LBC computer component code 938**.
Refit the battery pack and carry out an electrical test.

AFTER REPAIR	Follow the instructions.

DF589 DTC3/15 PRESENT OR STORED	BATTERY CELL NO. 13 VOLTAGE

CONSIGNES	**Special notes:** Cell excess voltage **Note:** one of the battery cells is overloaded and has exceeded 4.2 V. STOP warning light illuminated and traction impossible

If the fault is stored: reproduce the fault by charging the battery pack using the vehicle.
Open the battery pack and remove the bar plug in order to reach the terminals of the modules.
Check the voltage of the cell at fault using a multimeter and compare it with the value measured with the Clip. If the module shows excess voltage, replace the unit concerned with a module balanced with the voltage of the other modules.
If the module does not show excess voltage, check **the continuity and insulation between the** following connections: • **Pin 1** of the module connector (8 pin connector) • **Pin 20** of the 40 pin BMS connector for **module 7** (cells 13 and 14) Then check the continuity and the insulation of the following connections: • **Pin 6** of the module connector (8 pin connector) • **Pin 39** of the 40 pin BMS connector for **module 7** (cells 13 and 14) Finally check the insulation and continuity of the following connections: • **Pin 8** of the module connector (8 pin connector) • **Pin 40** of the 40 pin BMS connector for **module 7** (cells 13 and 14) If the connection is faulty and if there is a repair procedure (see **Technical Note 6015A (Renault), Repairing electrical wiring, Wiring: Precautions for repair**), repair the wiring, otherwise replace the wiring.
If the connection is not faulty, replace the **LBC computer component code 938**.
Refit the battery pack and carry out an electrical test.

AFTER REPAIR	Follow the instructions.

DF590 DTC3/16 PRESENT OR STORED	BATTERY CELL NO. 14 VOLTAGE

CONSIGNES	**Special notes:** Cell excess voltage **Note:** one of the battery cells is overloaded and has exceeded 4.2 V. STOP warning light illuminated and traction impossible

If the fault is stored: reproduce the fault by charging the battery pack using the vehicle.
Open the battery pack and remove the bar plug in order to reach the terminals of the modules.
Check the voltage of the cell at fault using a multimeter and compare it with the value measured with the Clip. If the module shows excess voltage, replace the unit concerned with a module balanced with the voltage of the other modules.
If the module does not show excess voltage, check **the continuity and insulation between the** following connections: • **Pin 1** of the module connector (8 pin connector) • **Pin 20** of the 40 pin BMS connector for **module 7** (cells 13 and 14) Then check the continuity and the insulation of the following connections: • **Pin 6** of the module connector (8 pin connector) • **Pin 39** of the 40 pin BMS connector for **module 7** (cells 13 and 14) Finally check the insulation and continuity of the following connections: • **Pin 8** of the module connector (8 pin connector) • **Pin 40** of the 40 pin BMS connector for **module 7** (cells 13 and 14) If the connection is faulty and if there is a repair procedure (see **Technical Note 6015A (Renault), Repairing electrical wiring, Wiring: Precautions for repair**), repair the wiring, otherwise replace the wiring.
If the connection is not faulty, replace the **LBC computer component code 938**.
Refit the battery pack and carry out an electrical test.

AFTER REPAIR	Follow the instructions.

DF158 DTC3/87 PRESENT OR STORED	CELL OVERVOLTAGE

CONSIGNES	**Special notes:** Cell excess voltage This fault is linked to a unit fault in the excess voltage cell. Prioritise dealing with faults related to the cells. **Note:** one of the battery cells is overloaded and has exceeded 4.2 V. STOP warning light illuminated and traction impossible

If the fault is stored: reproduce the fault by charging the battery pack using the vehicle.
Open the battery pack and remove the bar plug in order to reach the terminals of the modules.
Check the voltage of the cells using the parameters for reading the voltage of the cells in the LBC computer. Note the number of the cell with excess voltage above 4.2 V.
Check the voltage of the cell at fault using a multimeter and compare it with the value measured with the Clip. If the module shows excess voltage, replace the unit concerned with a module balanced with the voltage of the other modules.
If the module does not show excess voltage, check **the continuity and insulation of the** following connections: • **Pin 1** of the module connector (8 pin connector) • **Pin 2** of the 40 pin BMS connector for **module 1** (cell 1 and 2) • **Pin 5** of the 40 pin BMS connector for **module 2** (cell 3 and 4) • **Pin 8** of the 40 pin BMS connector for **module 3** (cells 5 and 6) • **Pin 11** of the 40 pin BMS connector for **module 4** (cells 7 and 8) • **Pin 13** of the 40 pin BMS connector for **module 5** (cells 9 and 10) • **Pin 36** of the 40 pin BMS connector for **module 6** (cells 11 and 12) • **Pin 20** of the 40 pin BMS connector for **module 7** (cells 13 and 14) Then check the continuity and the insulation of the following connections: • **Pin 6** of the module connector (8 pin connector) • **Pin 22** of the BMS 40 pin connector for **module 1** (cell 1 and 2) • **Pin 25** of the BMS 40 pin connector for **module 2** (cell 3 and 4) • **Pin 28** of the 40 pin BMS connector for **module 3** (cells 5 and 6) • **Pin 31** of the 40 pin BMS connector for **module 4** (cells 7 and 8) • **Pin 33** of the 40 pin BMS connector for **module 5** (cells 9 and 10) • **Pin 16** of the 40 pin BMS connector for **module 6** (cells 11 and 12) • **Pin 39** of the 40 pin BMS connector for **module 7** (cells 13 and 14)

AFTER REPAIR	Follow the instructions.

Finally check the insulation and continuity of the following connections: • **Pin 8** of the module connector (8 pin connector) • **Pin 3** of the BMS 40 pin connector for **module 1** (cell 1 and 2) • **Pin 6** of the BMS 40 pin connector for **module 2** (cell 3 and 4) • **Pin 9** of the 40 pin BMS connector for **module 3** (cells 5 and 6) • **Pin 12** of the 40 pin BMS connector for **module 4** (cells 7 and 8) • **Pin 14** of the 40 pin BMS connector for **module 5** (cells 9 and 10) • **Pin 17** of the 40 pin BMS connector for **module 6** (cells 11 and 12) • **Pin 40** of the 40 pin BMS connector for **module 7** (cells 13 and 14) If the connection is faulty and if there is a repair procedure (see **Technical Note 6015A (Renault), Repairing electrical wiring, Wiring: Precautions for repair**), repair the wiring, otherwise replace the wiring.
If the connection is not faulty, replace the **LBC computer component code 938**.
Refit the battery pack and carry out an electrical test.

AFTER REPAIR	Follow the instructions.

DF240 DTC3/17 PRESENT OR STORED	CELL OVERVOLTAGE

CONSIGNES	**Special notes:** The charging of the battery pack stops **Note:** one of the battery cells is overloaded and has reached 4.3 V in charge mode or 4.4 V in traction mode

If the fault is stored: reproduce the fault by charging the battery pack using the vehicle.
Check the voltage of the cells using the parameters for reading the voltage of the cells in the LBC computer. Note the number of the cell showing excess voltage above 4.18 V.
Open the battery pack and remove the bar plug in order to reach the terminals of the modules.
Check the voltage of the module located using a multimeter and compare it with the value measured with the Clip. If the module shows excess voltage, replace the unit concerned with a module balanced with the voltage of the other modules.
If the module does not show excess voltage, check **the continuity and insulation of the** following connections: • **Pin 1** of the module connector (8 pin connector) • **Pin 2** of the 40 pin BMS connector for **module 1** (cell 1 and 2) • **Pin 5** of the 40 pin BMS connector for **module 2** (cell 3 and 4) • **Pin 8** of the 40 pin BMS connector for **module 3** (cells 5 and 6) • **Pin 11** of the 40 pin BMS connector for **module 4** (cells 7 and 8) • **Pin 13** of the 40 pin BMS connector for **module 5** (cells 9 and 10) • **Pin 36** of the 40 pin BMS connector for **module 6** (cells 11 and 12) • **Pin 20** of the 40 pin BMS connector for **module 7** (cells 13 and 14) Then check the continuity and the insulation of the following connections: • **Pin 6** of the module connector (8 pin connector) • **Pin 22** of the BMS 40 pin connector for **module 1** (cell 1 and 2) • **Pin 25** of the BMS 40 pin connector for **module 2** (cell 3 and 4) • **Pin 28** of the 40 pin BMS connector for **module 3** (cells 5 and 6) • **Pin 31** of the 40 pin BMS connector for **module 4** (cells 7 and 8) • **Pin 33** of the 40 pin BMS connector for **module 5** (cells 9 and 10) • **Pin 16** of the 40 pin BMS connector for **module 6** (cells 11 and 12) • **Pin 39** of the 40 pin BMS connector for **module 7** (cells 13 and 14)

AFTER REPAIR	Follow the instructions.

Finally check the insulation and continuity of the following connections: • **Pin 8** of the module connector (8 pin connector) • **Pin 3** of the BMS 40 pin connector for **module 1** (cell 1 and 2) • **Pin 6** of the BMS 40 pin connector for **module 2** (cell 3 and 4) • **Pin 9** of the 40 pin BMS connector for **module 3** (cells 5 and 6) • **Pin 12** of the 40 pin BMS connector for **module 4** (cells 7 and 8) • **Pin 14** of the 40 pin BMS connector for **module 5** (cells 9 and 10) • **Pin 17** of the 40 pin BMS connector for **module 6** (cells 11 and 12) • **Pin 40** of the 40 pin BMS connector for **module 7** (cells 13 and 14) If the connection is faulty and if there is a repair procedure (see **Technical Note 6015A (Renault), Repairing electrical wiring, Wiring: Precautions for repair**), repair the wiring, otherwise replace the wiring.
If the connection is not faulty, replace the **LBC computer component code 938**.
Refit the battery pack and carry out an electrical test.

AFTER REPAIR	Follow the instructions.

DF240 DTC3/19 PRESENT OR STORED	BATTERY TRAY OVERVOLTAGE LEVEL 1

CONSIGNES	**Special notes:** The charging of the battery pack stops. SERV warning light on **Note:** the battery pack is in overload and has reached a voltage of 58.8 V in charge mode or 60.2 V in traction mode.

If the fault is stored: reproduce the fault by charging the battery pack using the vehicle.
Check the voltage of the cells using the parameters for reading the voltage of the cells in the LBC computer. Note the number of the cell showing excess voltage above 4.18 V.
Open the battery pack and remove the bar plug in order to reach the terminals of the modules.
Check the voltage of the module located using a multimeter and compare it with the value measured with the Clip. If the module shows excess voltage, replace the unit concerned with a module balanced with the voltage of the other modules.
If the module does not show excess voltage, check **the continuity and insulation of the** following connections: • **Pin 1** of the module connector (8 pin connector) • **Pin 2** of the 40 pin BMS connector for **module 1** (cell 1 and 2) • **Pin 5** of the 40 pin BMS connector for **module 2** (cell 3 and 4) • **Pin 8** of the 40 pin BMS connector for **module 3** (cells 5 and 6) • **Pin 11** of the 40 pin BMS connector for **module 4** (cells 7 and 8) • **Pin 13** of the 40 pin BMS connector for **module 5** (cells 9 and 10) • **Pin 36** of the 40 pin BMS connector for **module 6** (cells 11 and 12) • **Pin 20** of the 40 pin BMS connector for **module 7** (cells 13 and 14) Then check the continuity and the insulation of the following connections: • **Pin 6** of the module connector (8 pin connector) • **Pin 22** of the BMS 40 pin connector for **module 1** (cell 1 and 2) • **Pin 25** of the BMS 40 pin connector for **module 2** (cell 3 and 4) • **Pin 28** of the 40 pin BMS connector for **module 3** (cells 5 and 6) • **Pin 31** of the 40 pin BMS connector for **module 4** (cells 7 and 8) • **Pin 33** of the 40 pin BMS connector for **module 5** (cells 9 and 10) • **Pin 16** of the 40 pin BMS connector for **module 6** (cells 11 and 12) • **Pin 39** of the 40 pin BMS connector for **module 7** (cells 13 and 14)

AFTER REPAIR	Follow the instructions.

Finally check the insulation and continuity of the following connections: • **Pin 8** of the module connector (8 pin connector) • **Pin 3** of the BMS 40 pin connector for **module 1** (cell 1 and 2) • **Pin 6** of the BMS 40 pin connector for **module 2** (cell 3 and 4) • **Pin 9** of the 40 pin BMS connector for **module 3** (cells 5 and 6) • **Pin 12** of the 40 pin BMS connector for **module 4** (cells 7 and 8) • **Pin 14** of the 40 pin BMS connector for **module 5** (cells 9 and 10) • **Pin 17** of the 40 pin BMS connector for **module 6** (cells 11 and 12) • **Pin 40** of the 40 pin BMS connector for **module 7** (cells 13 and 14) If the connection is faulty and if there is a repair procedure (see **Technical Note 6015A (Renault), Repairing electrical wiring, Wiring: Precautions for repair**), repair the wiring, otherwise replace the wiring.
If the connection is not faulty, replace the **LBC computer component code 938**.
Refit the battery pack and carry out an electrical test.

AFTER REPAIR	Follow the instructions.

DF145 DTC3/20 PRESENT OR STORED	BATTERY TRAY OVERVOLTAGE LEVEL 2

CONSIGNES	**Special notes:** The charging of the battery pack stops. STOP light illuminated **Note:** the battery pack is in overload and has reached a voltage of 60.2 V in charge mode or 61.6 V in traction mode.

If the fault is stored: reproduce the fault by charging the battery pack using the vehicle.
Check the voltage of the cells using the parameters for reading the voltage of the cells in the LBC computer. Note the number of the cell showing excess voltage.
Open the battery pack and remove the bar plug in order to reach the terminals of the modules.
Check the voltage of the module located using a multimeter and compare it with the value measured with the Clip. If the module shows excess voltage, replace the unit concerned with a module balanced with the voltage of the other modules.
If the module does not show excess voltage, check **the continuity and insulation of the** following connections: • **Pin 1** of the module connector (8 pin connector) • **Pin 2** of the 40 pin BMS connector for **module 1** (cell 1 and 2) • **Pin 5** of the 40 pin BMS connector for **module 2** (cell 3 and 4) • **Pin 8** of the 40 pin BMS connector for **module 3** (cells 5 and 6) • **Pin 11** of the 40 pin BMS connector for **module 4** (cells 7 and 8) • **Pin 13** of the 40 pin BMS connector for **module 5** (cells 9 and 10) • **Pin 36** of the 40 pin BMS connector for **module 6** (cells 11 and 12) • **Pin 20** of the 40 pin BMS connector for **module 7** (cells 13 and 14) Then check the continuity and the insulation of the following connections: • **Pin 6** of the module connector (8 pin connector) • **Pin 22** of the BMS 40 pin connector for **module 1** (cell 1 and 2) • **Pin 25** of the BMS 40 pin connector for **module 2** (cell 3 and 4) • **Pin 28** of the 40 pin BMS connector for **module 3** (cells 5 and 6) • **Pin 31** of the 40 pin BMS connector for **module 4** (cells 7 and 8) • **Pin 33** of the 40 pin BMS connector for **module 5** (cells 9 and 10) • **Pin 16** of the 40 pin BMS connector for **module 6** (cells 11 and 12) • **Pin 39** of the 40 pin BMS connector for **module 7** (cells 13 and 14)

AFTER REPAIR	Follow the instructions.

Finally check the insulation and continuity of the following connections: • **Pin 8** of the module connector (8 pin connector) • **Pin 3** of the BMS 40 pin connector for **module 1** (cell 1 and 2) • **Pin 6** of the BMS 40 pin connector for **module 2** (cell 3 and 4) • **Pin 9** of the 40 pin BMS connector for **module 3** (cells 5 and 6) • **Pin 12** of the 40 pin BMS connector for **module 4** (cells 7 and 8) • **Pin 14** of the 40 pin BMS connector for **module 5** (cells 9 and 10) • **Pin 17** of the 40 pin BMS connector for **module 6** (cells 11 and 12) • **Pin 40** of the 40 pin BMS connector for **module 7** (cells 13 and 14) If the connection is faulty and if there is a repair procedure (see **Technical Note 6015A (Renault), Repairing electrical wiring, Wiring: Precautions for repair**), repair the wiring, otherwise replace the wiring.
If the connection is not faulty, replace the **LBC computer component code 938**.
Refit the battery pack and carry out an electrical test.

AFTER REPAIR	Follow the instructions.

DF245 DTC3/21 PRESENT OR STORED	BATTERY CELL NO. 1 VOLTAGE

CONSIGNES	**Special notes:** The charging of the battery pack stops. STOP light illuminated **Note:** at least one of the cell voltages is below 3 V

If the fault is stored: reproduce the fault by charging the battery pack using the vehicle.
Open the battery pack and remove the bar plug in order to reach the terminals of the modules.
Check the voltage of the module located using a multimeter and compare it with the value measured with the Clip. If the module shows undervoltage, replace the unit concerned with a module balanced with the voltage of the other modules.
If the module does not show excess voltage, check **the continuity and insulation between the** following connections: • **Pin 1** of the module connector (8 pin connector) • **Pin 2** of the 40 pin BMS connector for **module 1** (cell 1 and 2) Then check the continuity and the insulation of the following connections: • **Pin 6** of the module connector (8 pin connector) • **Pin 22** of the BMS 40 pin connector for **module 1** (cell 1 and 2) Finally check the insulation and continuity of the following connections: • **Pin 8** of the module connector (8 pin connector) • **Pin 3** of the BMS 40 pin connector for **module 1** (cell 1 and 2) If the connection is faulty and if there is a repair procedure (see **Technical Note 6015A (Renault), Repairing electrical wiring, Wiring: Precautions for repair**), repair the wiring, otherwise replace the wiring.
If the connection is not faulty, replace the **LBC computer component code 938**.
Refit the battery pack and carry out an electrical test.

AFTER REPAIR	Follow the instructions.

DF246 DTC3/22 PRESENT OR STORED	BATTERY CELL NO. 2 VOLTAGE

CONSIGNES	**Special notes:** The charging of the battery pack stops. STOP light illuminated **Note:** at least one of the cell voltages is below 3 V

If the fault is stored: reproduce the fault by charging the battery pack using the vehicle.
Open the battery pack and remove the bar plug in order to reach the terminals of the modules.
Check the voltage of the module located using a multimeter and compare it with the value measured with the Clip. If the module shows undervoltage, replace the unit concerned with a module balanced with the voltage of the other modules.
If the module does not show excess voltage, check **the continuity and insulation between the** following connections: • **Pin 1** of the module connector (8 pin connector) • **Pin 2** of the 40 pin BMS connector for **module 1** (cell 1 and 2) Then check the continuity and the insulation of the following connections: • **Pin 6** of the module connector (8 pin connector) • **Pin 22** of the BMS 40 pin connector for **module 1** (cell 1 and 2) Finally check the insulation and continuity of the following connections: • **Pin 8** of the module connector (8 pin connector) • **Pin 3** of the BMS 40 pin connector for **module 1** (cell 1 and 2) If the connection is faulty and if there is a repair procedure (see **Technical Note 6015A (Renault), Repairing electrical wiring, Wiring: Precautions for repair**), repair the wiring, otherwise replace the wiring.
If the connection is not faulty, replace the **LBC computer component code 938**.
Refit the battery pack and carry out an electrical test.

AFTER REPAIR	Follow the instructions.

DF247 DTC3/23 PRESENT OR STORED	BATTERY CELL NO. 3 VOLTAGE

CONSIGNES	**Special notes:** The charging of the battery pack stops. STOP light illuminated **Note:** at least one of the cell voltages is below 3 V

If the fault is stored: reproduce the fault by charging the battery pack using the vehicle.
Open the battery pack and remove the bar plug in order to reach the terminals of the modules.
Check the voltage of the module located using a multimeter and compare it with the value measured with the Clip. If the module shows undervoltage, replace the unit concerned with a module balanced with the voltage of the other modules.
If the module does not show excess voltage, check **the continuity and insulation between the** following connections: • **Pin 1** of the module connector (8 pin connector) • **Pin 5** of the 40 pin BMS connector for **module 2** (cell 3 and 4) Then check the continuity and the insulation of the following connections: • **Pin 6** of the module connector (8 pin connector) • **Pin 25** of the BMS 40 pin connector for **module 2** (cell 3 and 4) Finally check the insulation and continuity of the following connections: • **Pin 8** of the module connector (8 pin connector) • **Pin 6** of the BMS 40 pin connector for **module 2** (cell 3 and 4) If the connection is faulty and if there is a repair procedure (see **Technical Note 6015A (Renault), Repairing electrical wiring, Wiring: Precautions for repair**), repair the wiring, otherwise replace the wiring.
If the connection is not faulty, replace the **LBC computer component code 938**.
Refit the battery pack and carry out an electrical test.

AFTER REPAIR	Follow the instructions.

DF248 DTC3/24 PRESENT OR STORED	BATTERY CELL NO. 4 VOLTAGE

CONSIGNES	**Special notes:** The charging of the battery pack stops. STOP light illuminated **Note:** at least one of the cell voltages is below 3 V

If the fault is stored: reproduce the fault by charging the battery pack using the vehicle.
Open the battery pack and remove the bar plug in order to reach the terminals of the modules.
Check the voltage of the module located using a multimeter and compare it with the value measured with the Clip. If the module shows undervoltage, replace the unit concerned with a module balanced with the voltage of the other modules.
If the module does not show excess voltage, check **the continuity and insulation between the** following connections: • **Pin 1** of the module connector (8 pin connector) • **Pin 5** of the 40 pin BMS connector for **module 2** (cell 3 and 4) Then check the continuity and the insulation of the following connections: • **Pin 6** of the module connector (8 pin connector) • **Pin 25** of the BMS 40 pin connector for **module 2** (cell 3 and 4) Finally check the insulation and continuity of the following connections: • **Pin 8** of the module connector (8 pin connector) • **Pin 6** of the BMS 40 pin connector for **module 2** (cell 3 and 4) If the connection is faulty and if there is a repair procedure (see **Technical Note 6015A (Renault), Repairing electrical wiring, Wiring: Precautions for repair**), repair the wiring, otherwise replace the wiring.
If the connection is not faulty, replace the **LBC computer component code 938**.
Refit the battery pack and carry out an electrical test.

AFTER REPAIR	Follow the instructions.

DF498 DTC3/25 PRESENT OR STORED	BATTERY CELL NO. 5 VOLTAGE

CONSIGNES	**Special notes:** The charging of the battery pack stops. STOP light illuminated **Note:** at least one of the cell voltages is below 3 V

If the fault is stored: reproduce the fault by charging the battery pack using the vehicle.
Open the battery pack and remove the bar plug in order to reach the terminals of the modules.
Check the voltage of the module located using a multimeter and compare it with the value measured with the Clip. If the module shows undervoltage, replace the unit concerned with a module balanced with the voltage of the other modules.
If the module does not show excess voltage, check **the continuity and insulation between the** following connections: • **Pin 1** of the module connector (8 pin connector) • **Pin 8** of the 40 pin BMS connector for **module 3** (cells 5 and 6) Then check the continuity and the insulation of the following connections: • **Pin 6** of the module connector (8 pin connector) • **Pin 28** of the 40 pin BMS connector for **module 3** (cells 5 and 6) Finally check the insulation and continuity of the following connections: • **Pin 8** of the module connector (8 pin connector) • **Pin 9** of the 40 pin BMS connector for **module 3** (cells 5 and 6) If the connection is faulty and if there is a repair procedure (see **Technical Note 6015A (Renault), Repairing electrical wiring, Wiring: Precautions for repair**), repair the wiring, otherwise replace the wiring.
If the connection is not faulty, replace the **LBC computer component code 938**.
Refit the battery pack and carry out an electrical test.

AFTER REPAIR	Follow the instructions.

DF499 DTC3/26 PRESENT OR STORED	BATTERY CELL NO. 6 VOLTAGE

CONSIGNES	**Special notes:** The charging of the battery pack stops. STOP light illuminated **Note:** at least one of the cell voltages is below 3 V

If the fault is stored: reproduce the fault by charging the battery pack using the vehicle.
Open the battery pack and remove the bar plug in order to reach the terminals of the modules.
Check the voltage of the module located using a multimeter and compare it with the value measured with the Clip. If the module shows undervoltage, replace the unit concerned with a module balanced with the voltage of the other modules.
If the module does not show excess voltage, check **the continuity and insulation between the** following connections: • **Pin 1** of the module connector (8 pin connector) • **Pin 8** of the 40 pin BMS connector for **module 3** (cells 5 and 6) Then check the continuity and the insulation of the following connections: • **Pin 6** of the module connector (8 pin connector) • **Pin 28** of the 40 pin BMS connector for **module 3** (cells 5 and 6) Finally check the insulation and continuity of the following connections: • **Pin 8** of the module connector (8 pin connector) • **Pin 9** of the 40 pin BMS connector for **module 3** (cells 5 and 6) If the connection is faulty and if there is a repair procedure (see **Technical Note 6015A (Renault), Repairing electrical wiring, Wiring: Precautions for repair**), repair the wiring, otherwise replace the wiring.
If the connection is not faulty, replace the **LBC computer component code 938**.
Refit the battery pack and carry out an electrical test.

AFTER REPAIR	Follow the instructions.

DF500 DTC3/27 PRESENT OR STORED	BATTERY CELL NO. 7 VOLTAGE

CONSIGNES	**Special notes:** The charging of the battery pack stops. STOP light illuminated **Note:** at least one of the cell voltages is below 3 V

If the fault is stored: reproduce the fault by charging the battery pack using the vehicle.
Open the battery pack and remove the bar plug in order to reach the terminals of the modules.
Check the voltage of the module located using a multimeter and compare it with the value measured with the Clip. If the module shows undervoltage, replace the unit concerned with a module balanced with the voltage of the other modules.
If the module does not show excess voltage, check **the continuity and insulation between the** following connections: • **Pin 1** of the module connector (8 pin connector) • **Pin 11** of the 40 pin BMS connector for **module 4** (cells 7 and 8) Then check the continuity and the insulation of the following connections: • **Pin 6** of the module connector (8 pin connector) • **Pin 31** of the 40 pin BMS connector for **module 4** (cells 7 and 8) Finally check the insulation and continuity of the following connections: • **Pin 8** of the module connector (8 pin connector) • **Pin 12** of the 40 pin BMS connector for **module 4** (cells 7 and 8) If the connection is faulty and if there is a repair procedure (see **Technical Note 6015A (Renault), Repairing electrical wiring, Wiring: Precautions for repair**), repair the wiring, otherwise replace the wiring.
If the connection is not faulty, replace the **LBC computer component code 938**.
Refit the battery pack and carry out an electrical test.

AFTER REPAIR	Follow the instructions.

DF501 DTC3/28 PRESENT OR STORED	BATTERY CELL NO. 8 VOLTAGE

CONSIGNES	**Special notes:** The charging of the battery pack stops. STOP light illuminated **Note:** at least one of the cell voltages is below 3 V

If the fault is stored: reproduce the fault by charging the battery pack using the vehicle.
Open the battery pack and remove the bar plug in order to reach the terminals of the modules.
Check the voltage of the module located using a multimeter and compare it with the value measured with the Clip. If the module shows undervoltage, replace the unit concerned with a module balanced with the voltage of the other modules.
If the module does not show excess voltage, check **the continuity and insulation between the** following connections: • **Pin 1** of the module connector (8 pin connector) • **Pin 11** of the 40 pin BMS connector for **module 4** (cells 7 and 8) Then check the continuity and the insulation of the following connections: • **Pin 6** of the module connector (8 pin connector) • **Pin 31** of the 40 pin BMS connector for **module 4** (cells 7 and 8) Finally check the insulation and continuity of the following connections: • **Pin 8** of the module connector (8 pin connector) • **Pin 12** of the 40 pin BMS connector for **module 4** (cells 7 and 8) If the connection is faulty and if there is a repair procedure (see **Technical Note 6015A (Renault), Repairing electrical wiring, Wiring: Precautions for repair**), repair the wiring, otherwise replace the wiring.
If the connection is not faulty, replace the **LBC computer component code 938**.
Refit the battery pack and carry out an electrical test.

AFTER REPAIR	Follow the instructions.

DF502 DTC3/29 PRESENT OR STORED	BATTERY CELL NO. 9 VOLTAGE

CONSIGNES	**Special notes:** The charging of the battery pack stops. STOP light illuminated **Note:** at least one of the cell voltages is below 3 V

If the fault is stored: reproduce the fault by charging the battery pack using the vehicle.
Open the battery pack and remove the bar plug in order to reach the terminals of the modules.
Check the voltage of the module located using a multimeter and compare it with the value measured with the Clip. If the module shows undervoltage, replace the unit concerned with a module balanced with the voltage of the other modules.
If the module does not show excess voltage, check **the continuity and insulation between the** following connections: • **Pin 1** of the module connector (8 pin connector) • **Pin 13** of the 40 pin BMS connector for **module 5** (cells 9 and 10) Then check the continuity and the insulation of the following connections: • **Pin 6** of the module connector (8 pin connector) • **Pin 33** of the 40 pin BMS connector for **module 5** (cells 9 and 10) Finally check the insulation and continuity of the following connections: • **Pin 8** of the module connector (8 pin connector) • **Pin 14** of the 40 pin BMS connector for **module 5** (cells 9 and 10) If the connection is faulty and if there is a repair procedure (see **Technical Note 6015A (Renault), Repairing electrical wiring, Wiring: Precautions for repair**), repair the wiring, otherwise replace the wiring.
If the connection is not faulty, replace the **LBC computer component code 938**.
Refit the battery pack and carry out an electrical test.

AFTER REPAIR	Follow the instructions.

DF503 DTC3/30 PRESENT OR STORED	BATTERY CELL NO. 10 VOLTAGE

CONSIGNES	**Special notes:** The charging of the battery pack stops. STOP light illuminated **Note:** at least one of the cell voltages is below 3 V

If the fault is stored: reproduce the fault by charging the battery pack using the vehicle.
Open the battery pack and remove the bar plug in order to reach the terminals of the modules.
Check the voltage of the module located using a multimeter and compare it with the value measured with the Clip. If the module shows undervoltage, replace the unit concerned with a module balanced with the voltage of the other modules.
If the module does not show excess voltage, check **the continuity and insulation between the** following connections: • **Pin 1** of the module connector (8 pin connector) • **Pin 13** of the 40 pin BMS connector for **module 5** (cells 9 and 10) Then check the continuity and the insulation of the following connections: • **Pin 6** of the module connector (8 pin connector) • **Pin 33** of the 40 pin BMS connector for **module 5** (cells 9 and 10) Finally check the insulation and continuity of the following connections: • **Pin 8** of the module connector (8 pin connector) • **Pin 14** of the 40 pin BMS connector for **module 5** (cells 9 and 10) If the connection is faulty and if there is a repair procedure (see **Technical Note 6015A (Renault), Repairing electrical wiring, Wiring: Precautions for repair**), repair the wiring, otherwise replace the wiring.
If the connection is not faulty, replace the **LBC computer component code 938**.
Refit the battery pack and carry out an electrical test.

AFTER REPAIR	Follow the instructions.

DF504 DTC3/31 PRESENT OR STORED	BATTERY CELL NO. 11 VOLTAGE

CONSIGNES	**Special notes:** The charging of the battery pack stops. STOP light illuminated **Note:** at least one of the cell voltages is below 3 V

If the fault is stored: reproduce the fault by charging the battery pack using the vehicle.
Open the battery pack and remove the bar plug in order to reach the terminals of the modules.
Check the voltage of the module located using a multimeter and compare it with the value measured with the Clip. If the module shows undervoltage, replace the unit concerned with a module balanced with the voltage of the other modules.
If the module does not show excess voltage, check **the continuity and insulation between the** following connections: • **Pin 1** of the module connector (8 pin connector) • **Pin 36** of the 40 pin BMS connector for **module 6** (cells 11 and 12) Then check the continuity and the insulation of the following connections: • **Pin 6** of the module connector (8 pin connector) • **Pin 16** of the 40 pin BMS connector for **module 6** (cells 11 and 12) Finally check the insulation and continuity of the following connections: • **Pin 8** of the module connector (8 pin connector) • **Pin 17** of the 40 pin BMS connector for **module 6** (cells 11 and 12) If the connection is faulty and if there is a repair procedure (see **Technical Note 6015A (Renault), Repairing electrical wiring, Wiring: Precautions for repair**), repair the wiring, otherwise replace the wiring.
If the connection is not faulty, replace the **LBC computer component code 938**.
Refit the battery pack and carry out an electrical test.

AFTER REPAIR	Follow the instructions.

DF505 DTC3/32 PRESENT OR STORED	BATTERY CELL NO. 12 VOLTAGE

CONSIGNES	**Special notes:** The charging of the battery pack stops. STOP light illuminated **Note:** at least one of the cell voltages is below 3 V

If the fault is stored: reproduce the fault by charging the battery pack using the vehicle.
Open the battery pack and remove the bar plug in order to reach the terminals of the modules.
Check the voltage of the module located using a multimeter and compare it with the value measured with the Clip. If the module shows undervoltage, replace the unit concerned with a module balanced with the voltage of the other modules.
If the module does not show excess voltage, check **the continuity and insulation between the** following connections: • **Pin 1** of the module connector (8 pin connector) • **Pin 36** of the 40 pin BMS connector for **module 6** (cells 11 and 12) Then check the continuity and the insulation of the following connections: • **Pin 6** of the module connector (8 pin connector) • **Pin 16** of the 40 pin BMS connector for **module 6** (cells 11 and 12) Finally check the insulation and continuity of the following connections: • **Pin 8** of the module connector (8 pin connector) • **Pin 17** of the 40 pin BMS connector for **module 6** (cells 11 and 12) If the connection is faulty and if there is a repair procedure (see **Technical Note 6015A (Renault), Repairing electrical wiring, Wiring: Precautions for repair**), repair the wiring, otherwise replace the wiring.
If the connection is not faulty, replace the **LBC computer component code 938**.
Refit the battery pack and carry out an electrical test.

AFTER REPAIR	Follow the instructions.

DF506 DTC3/33 PRESENT OR STORED	BATTERY CELL NO. 13 VOLTAGE

CONSIGNES	**Special notes:** The charging of the battery pack stops. STOP light illuminated **Note:** at least one of the cell voltages is below 3 V

If the fault is stored: reproduce the fault by charging the battery pack using the vehicle.
Open the battery pack and remove the bar plug in order to reach the terminals of the modules.
Check the voltage of the module located using a multimeter and compare it with the value measured with the Clip. If the module shows undervoltage, replace the unit concerned with a module balanced with the voltage of the other modules.
If the module does not show excess voltage, check **the continuity and insulation between the** following connections: • **Pin 1** of the module connector (8 pin connector) • **Pin 20** of the 40 pin BMS connector for **module 7** (cells 13 and 14) Then check the continuity and the insulation of the following connections: • **Pin 6** of the module connector (8 pin connector) • **Pin 39** of the 40 pin BMS connector for **module 7** (cells 13 and 14) Finally check the insulation and continuity of the following connections: • **Pin 8** of the module connector (8 pin connector) • **Pin 40** of the 40 pin BMS connector for **module 7** (cells 13 and 14) If the connection is faulty and if there is a repair procedure (see **Technical Note 6015A (Renault), Repairing electrical wiring, Wiring: Precautions for repair**), repair the wiring, otherwise replace the wiring.
If the connection is not faulty, replace the **LBC computer component code 938**.
Refit the battery pack and carry out an electrical test.

AFTER REPAIR	Follow the instructions.

DF507 DTC3/34 PRESENT OR STORED	BATTERY CELL NO. 14 VOLTAGE

CONSIGNES	**Special notes:** The charging of the battery pack stops. STOP light illuminated **Note:** at least one of the cell voltages is below 3 V

If the fault is stored: reproduce the fault by charging the battery pack using the vehicle.
Open the battery pack and remove the bar plug in order to reach the terminals of the modules.
Check the voltage of the module located using a multimeter and compare it with the value measured with the Clip. If the module shows undervoltage, replace the unit concerned with a module balanced with the voltage of the other modules.
If the module does not show excess voltage, check **the continuity and insulation between the** following connections: • **Pin 1** of the module connector (8 pin connector) • **Pin 20** of the 40 pin BMS connector for **module 7** (cells 13 and 14) Then check the continuity and the insulation of the following connections: • **Pin 6** of the module connector (8 pin connector) • **Pin 39** of the 40 pin BMS connector for **module 7** (cells 13 and 14) Finally check the insulation and continuity of the following connections: • **Pin 8** of the module connector (8 pin connector) • **Pin 40** of the 40 pin BMS connector for **module 7** (cells 13 and 14) If the connection is faulty and if there is a repair procedure (see **Technical Note 6015A (Renault), Repairing electrical wiring, Wiring: Precautions for repair**), repair the wiring, otherwise replace the wiring.
If the connection is not faulty, replace the **LBC computer component code 938**.
Refit the battery pack and carry out an electrical test.

AFTER REPAIR	Follow the instructions.

DF250 DTC3/35 PRESENT OR STORED	CELL UNDERVOLTAGE

CONSIGNES	**Special notes:** The charging of the battery pack stops. STOP light illuminated **Note:** at least one of the battery cells is excessively drained below 2.8 V.

If the fault is stored: reproduce the fault by charging the battery pack using the vehicle.
Check the voltage of the cells using the parameters for reading the voltage of the cells in the LBC computer. Note the number of the cell showing undervoltage below 2.8 V.
Open the battery pack and remove the bar plug in order to reach the terminals of the modules.
Check the voltage of the module located using a multimeter and compare it with the value measured with the Clip. If the module shows undervoltage, replace the unit concerned with a module balanced with the voltage of the other modules.
If the module does not show excess voltage, check **the continuity and insulation of the** following connections: • **Pin 1** of the module connector (8 pin connector) • **Pin 2** of the 40 pin BMS connector for **module 1** (cell 1 and 2) • **Pin 5** of the 40 pin BMS connector for **module 2** (cell 3 and 4) • **Pin 8** of the 40 pin BMS connector for **module 3** (cells 5 and 6) • **Pin 11** of the 40 pin BMS connector for **module 4** (cells 7 and 8) • **Pin 13** of the 40 pin BMS connector for **module 5** (cells 9 and 10) • **Pin 36** of the 40 pin BMS connector for **module 6** (cells 11 and 12) • **Pin 20** of the 40 pin BMS connector for **module 7** (cells 13 and 14) Then check the continuity and the insulation of the following connections: • **Pin 6** of the module connector (8 pin connector) • **Pin 22** of the BMS 40 pin connector for **module 1** (cell 1 and 2) • **Pin 25** of the BMS 40 pin connector for **module 2** (cell 3 and 4) • **Pin 28** of the 40 pin BMS connector for **module 3** (cells 5 and 6) • **Pin 31** of the 40 pin BMS connector for **module 4** (cells 7 and 8) • **Pin 33** of the 40 pin BMS connector for **module 5** (cells 9 and 10) • **Pin 16** of the 40 pin BMS connector for **module 6** (cells 11 and 12) • **Pin 39** of the 40 pin BMS connector for **module 7** (cells 13 and 14)

AFTER REPAIR	Follow the instructions.

Finally check the insulation and continuity of the following connections: • **Pin 8** of the module connector (8 pin connector) • **Pin 3** of the BMS 40 pin connector for **module 1** (cell 1 and 2) • **Pin 6** of the BMS 40 pin connector for **module 2** (cell 3 and 4) • **Pin 9** of the 40 pin BMS connector for **module 3** (cells 5 and 6) • **Pin 12** of the 40 pin BMS connector for **module 4** (cells 7 and 8) • **Pin 14** of the 40 pin BMS connector for **module 5** (cells 9 and 10) • **Pin 17** of the 40 pin BMS connector for **module 6** (cells 11 and 12) • **Pin 40** of the 40 pin BMS connector for **module 7** (cells 13 and 14) If the connection is faulty and if there is a repair procedure (see **Technical Note 6015A (Renault), Repairing electrical wiring, Wiring: Precautions for repair**), repair the wiring, otherwise replace the wiring.
If the connection is not faulty, replace the **LBC computer component code 938**.
Refit the battery pack and carry out an electrical test.

AFTER REPAIR	Follow the instructions.

DF251 DTC3/36 PRESENT OR STORED	CELL UNDERVOLTAGE

CONSIGNES	**Special notes:** The charging of the battery pack stops. STOP light illuminated **Note:** at least one of the battery cells is excessively drained below 2.5 V.

If the fault is stored: reproduce the fault by charging the battery pack using the vehicle.
Check the voltage of the cells using the parameters for reading the voltage of the cells in the LBC computer. Note the number of the cell showing undervoltage below 2.5 V.
Open the battery pack and remove the bar plug in order to reach the terminals of the modules.
Check the voltage of the module located using a multimeter and compare it with the value measured with the Clip. If the module shows undervoltage, replace the unit concerned with a module balanced with the voltage of the other modules.
If the module does not show excess voltage, check **the continuity and insulation of the** following connections: • **Pin 1** of the module connector (8 pin connector) • **Pin 2** of the 40 pin BMS connector for **module 1** (cell 1 and 2) • **Pin 5** of the 40 pin BMS connector for **module 2** (cell 3 and 4) • **Pin 8** of the 40 pin BMS connector for **module 3** (cells 5 and 6) • **Pin 11** of the 40 pin BMS connector for **module 4** (cells 7 and 8) • **Pin 13** of the 40 pin BMS connector for **module 5** (cells 9 and 10) • **Pin 36** of the 40 pin BMS connector for **module 6** (cells 11 and 12) • **Pin 20** of the 40 pin BMS connector for **module 7** (cells 13 and 14) Then check the continuity and the insulation of the following connections: • **Pin 6** of the module connector (8 pin connector) • **Pin 22** of the BMS 40 pin connector for **module 1** (cell 1 and 2) • **Pin 25** of the BMS 40 pin connector for **module 2** (cell 3 and 4) • **Pin 28** of the 40 pin BMS connector for **module 3** (cells 5 and 6) • **Pin 31** of the 40 pin BMS connector for **module 4** (cells 7 and 8) • **Pin 33** of the 40 pin BMS connector for **module 5** (cells 9 and 10) • **Pin 16** of the 40 pin BMS connector for **module 6** (cells 11 and 12) • **Pin 39** of the 40 pin BMS connector for **module 7** (cells 13 and 14)

AFTER REPAIR	Follow the instructions.

Finally check the insulation and continuity of the following connections: • **Pin 8** of the module connector (8 pin connector) • **Pin 3** of the BMS 40 pin connector for **module 1** (cell 1 and 2) • **Pin 6** of the BMS 40 pin connector for **module 2** (cell 3 and 4) • **Pin 9** of the 40 pin BMS connector for **module 3** (cells 5 and 6) • **Pin 12** of the 40 pin BMS connector for **module 4** (cells 7 and 8) • **Pin 14** of the 40 pin BMS connector for **module 5** (cells 9 and 10) • **Pin 17** of the 40 pin BMS connector for **module 6** (cells 11 and 12) • **Pin 40** of the 40 pin BMS connector for **module 7** (cells 13 and 14) If the connection is faulty and if there is a repair procedure (see **Technical Note 6015A (Renault), Repairing electrical wiring, Wiring: Precautions for repair**), repair the wiring, otherwise replace the wiring.
If the connection is not faulty, replace the **LBC computer component code 938**.
Refit the battery pack and carry out an electrical test.

AFTER REPAIR	Follow the instructions.

DF507 DTC3/34 PRESENT OR STORED	BATTERY CELL NO. 1 VOLTAGE

CONSIGNES	**Special notes:** The charging of the battery pack stops. STOP light illuminated **Note:** at least one of the battery cells is excessively drained below 2 V.

If the fault is stored: reproduce the fault by charging the battery pack using the vehicle.
Open the battery pack and remove the bar plug in order to reach the terminals of the modules.
Check the voltage of the module located using a multimeter and compare it with the value measured with the Clip. If the module shows undervoltage, replace the unit concerned with a module balanced with the voltage of the other modules.
If the module does not show excess voltage, check **the continuity and insulation between the** following connections: • **Pin 1** of the module connector (8 pin connector) • **Pin 2** of the 40 pin BMS connector for **module 1** (cell 1 and 2) Then check the continuity and the insulation of the following connections: • **Pin 6** of the module connector (8 pin connector) • **Pin 22** of the BMS 40 pin connector for **module 1** (cell 1 and 2) Finally check the insulation and continuity of the following connections: • **Pin 8** of the module connector (8 pin connector) • **Pin 3** of the BMS 40 pin connector for **module 1** (cell 1 and 2) If the connection is faulty and if there is a repair procedure (see **Technical Note 6015A (Renault), Repairing electrical wiring, Wiring: Precautions for repair**), repair the wiring, otherwise replace the wiring.
Caution for safety reasons, the replacement of the LBC is **mandatory** in dealing with this fault. **Replace the LBC component code 938**.
Refit the battery pack and carry out an electrical test.

AFTER REPAIR	Follow the instructions.

DF514 DTC3/38 PRESENT OR STORED	BATTERY CELL NO. 2 VOLTAGE

CONSIGNES	**Special notes:** The charging of the battery pack stops. STOP light illuminated **Note:** at least one of the battery cells is excessively drained below 2 V.

If the fault is stored: reproduce the fault by charging the battery pack using the vehicle.
Open the battery pack and remove the bar plug in order to reach the terminals of the modules.
Check the voltage of the module located using a multimeter and compare it with the value measured with the Clip. If the module shows undervoltage, replace the unit concerned with a module balanced with the voltage of the other modules.
If the module does not show excess voltage, check **the continuity and insulation between the** following connections: • **Pin 1** of the module connector (8 pin connector) • **Pin 2** of the 40 pin BMS connector for **module 1** (cell 1 and 2) Then check the continuity and the insulation of the following connections: • **Pin 6** of the module connector (8 pin connector) • **Pin 22** of the BMS 40 pin connector for **module 1** (cell 1 and 2) Finally check the insulation and continuity of the following connections: • **Pin 8** of the module connector (8 pin connector) • **Pin 3** of the BMS 40 pin connector for **module 1** (cell 1 and 2) If the connection is faulty and if there is a repair procedure (see **Technical Note 6015A (Renault), Repairing electrical wiring, Wiring: Precautions for repair**), repair the wiring, otherwise replace the wiring.
Caution for safety reasons, the replacement of the LBC is **mandatory** in dealing with this fault. **Replace the LBC component code 938**.
Refit the battery pack and carry out an electrical test.

AFTER REPAIR	Follow the instructions.

DF515 DTC3/39 PRESENT OR STORED	BATTERY CELL NO. 3 VOLTAGE

CONSIGNES	**Special notes:** The charging of the battery pack stops. STOP light illuminated **Note:** at least one of the battery cells is excessively drained below 2 V.

If the fault is stored: reproduce the fault by charging the battery pack using the vehicle.
Open the battery pack and remove the bar plug in order to reach the terminals of the modules.
Check the voltage of the module located using a multimeter and compare it with the value measured with the Clip. If the module shows undervoltage, replace the unit concerned with a module balanced with the voltage of the other modules.
If the module does not show excess voltage, check **the continuity and insulation between the** following connections: • **Pin 1** of the module connector (8 pin connector) • **Pin 5** of the 40 pin BMS connector for **module 2** (cell 3 and 4) Then check the continuity and the insulation of the following connections: • **Pin 6** of the module connector (8 pin connector) • **Pin 25** of the BMS 40 pin connector for **module 2** (cell 3 and 4) Finally check the insulation and continuity of the following connections: • **Pin 8** of the module connector (8 pin connector) • **Pin 6** of the BMS 40 pin connector for **module 2** (cell 3 and 4) If the connection is faulty and if there is a repair procedure (see **Technical Note 6015A (Renault), Repairing electrical wiring, Wiring: Precautions for repair**), repair the wiring, otherwise replace the wiring.
Caution for safety reasons, the replacement of the LBC is **mandatory** in dealing with this fault. **Replace the LBC component code 938**.
Refit the battery pack and carry out an electrical test.

AFTER REPAIR	Follow the instructions.

DF516 DTC3/40 PRESENT OR STORED	BATTERY CELL NO. 4 VOLTAGE

CONSIGNES	**Special notes:** The charging of the battery pack stops. STOP light illuminated **Note:** at least one of the battery cells is excessively drained below 2 V.

If the fault is stored: reproduce the fault by charging the battery pack using the vehicle.
Open the battery pack and remove the bar plug in order to reach the terminals of the modules.
Check the voltage of the module located using a multimeter and compare it with the value measured with the Clip. If the module shows undervoltage, replace the unit concerned with a module balanced with the voltage of the other modules.
If the module does not show excess voltage, check **the continuity and insulation between the** following connections: • **Pin 1** of the module connector (8 pin connector) • **Pin 5** of the 40 pin BMS connector for **module 2** (cell 3 and 4) Then check the continuity and the insulation of the following connections: • **Pin 6** of the module connector (8 pin connector) • **Pin 25** of the BMS 40 pin connector for **module 2** (cell 3 and 4) Finally check the insulation and continuity of the following connections: • **Pin 8** of the module connector (8 pin connector) • **Pin 6** of the BMS 40 pin connector for **module 2** (cell 3 and 4) If the connection is faulty and if there is a repair procedure (see **Technical Note 6015A (Renault), Repairing electrical wiring, Wiring: Precautions for repair**), repair the wiring, otherwise replace the wiring.
Caution for safety reasons, the replacement of the LBC is **mandatory** in dealing with this fault. **Replace the LBC component code 938**.
Refit the battery pack and carry out an electrical test.

AFTER REPAIR	Follow the instructions.

DF517 DTC3/41 PRESENT OR STORED	BATTERY CELL NO. 5 VOLTAGE

CONSIGNES	**Special notes:** The charging of the battery pack stops. STOP light illuminated **Note:** at least one of the battery cells is excessively drained below 2 V.

If the fault is stored: reproduce the fault by charging the battery pack using the vehicle.
Open the battery pack and remove the bar plug in order to reach the terminals of the modules.
Check the voltage of the module located using a multimeter and compare it with the value measured with the Clip. If the module shows undervoltage, replace the unit concerned with a module balanced with the voltage of the other modules.
If the module does not show excess voltage, check **the continuity and insulation between the** following connections: • **Pin 1** of the module connector (8 pin connector) • **Pin 8** of the 40 pin BMS connector for **module 3** (cells 5 and 6) Then check the continuity and the insulation of the following connections: • **Pin 6** of the module connector (8 pin connector) • **Pin 28** of the 40 pin BMS connector for **module 3** (cells 5 and 6) Finally check the insulation and continuity of the following connections: • **Pin 8** of the module connector (8 pin connector) • **Pin 9** of the 40 pin BMS connector for **module 3** (cells 5 and 6) If the connection is faulty and if there is a repair procedure (see **Technical Note 6015A (Renault), Repairing electrical wiring, Wiring: Precautions for repair**), repair the wiring, otherwise replace the wiring.
Caution for safety reasons, the replacement of the LBC is **mandatory** in dealing with this fault. **Replace the LBC component code 938**.
Refit the battery pack and carry out an electrical test.

AFTER REPAIR	Follow the instructions.

DF518 DTC3/42 PRESENT OR STORED	BATTERY CELL NO. 6 VOLTAGE

CONSIGNES	**Special notes:** The charging of the battery pack stops. STOP light illuminated **Note:** at least one of the battery cells is excessively drained below 2 V.

If the fault is stored: reproduce the fault by charging the battery pack using the vehicle.
Open the battery pack and remove the bar plug in order to reach the terminals of the modules.
Check the voltage of the module located using a multimeter and compare it with the value measured with the Clip. If the module shows undervoltage, replace the unit concerned with a module balanced with the voltage of the other modules.
If the module does not show excess voltage, check **the continuity and insulation between the** following connections: • **Pin 1** of the module connector (8 pin connector) • **Pin 8** of the 40 pin BMS connector for **module 3** (cells 5 and 6) Then check the continuity and the insulation of the following connections: • **Pin 6** of the module connector (8 pin connector) • **Pin 28** of the 40 pin BMS connector for **module 3** (cells 5 and 6) Finally check the insulation and continuity of the following connections: • **Pin 8** of the module connector (8 pin connector) • **Pin 9** of the 40 pin BMS connector for **module 3** (cells 5 and 6) If the connection is faulty and if there is a repair procedure (see **Technical Note 6015A (Renault), Repairing electrical wiring, Wiring: Precautions for repair**), repair the wiring, otherwise replace the wiring.
Caution for safety reasons, the replacement of the LBC is **mandatory** in dealing with this fault. **Replace the LBC component code 938**.
Refit the battery pack and carry out an electrical test.

AFTER REPAIR	Follow the instructions.

DF519 DTC3/43 PRESENT OR STORED	BATTERY CELL NO. 7 VOLTAGE

CONSIGNES	**Special notes:** The charging of the battery pack stops. STOP light illuminated **Note:** at least one of the battery cells is excessively drained below 2 V.

If the fault is stored: reproduce the fault by charging the battery pack using the vehicle.
Open the battery pack and remove the bar plug in order to reach the terminals of the modules.
Check the voltage of the module located using a multimeter and compare it with the value measured with the Clip. If the module shows undervoltage, replace the unit concerned with a module balanced with the voltage of the other modules.
If the module does not show excess voltage, check **the continuity and insulation between the** following connections: • **Pin 1** of the module connector (8 pin connector) • **Pin 11** of the 40 pin BMS connector for **module 4** (cells 7 and 8) Then check the continuity and the insulation of the following connections: • **Pin 6** of the module connector (8 pin connector) • **Pin 31** of the 40 pin BMS connector for **module 4** (cells 7 and 8) Finally check the insulation and continuity of the following connections: • **Pin 8** of the module connector (8 pin connector) • **Pin 12** of the 40 pin BMS connector for **module 4** (cells 7 and 8) If the connection is faulty and if there is a repair procedure (see **Technical Note 6015A (Renault), Repairing electrical wiring, Wiring: Precautions for repair**), repair the wiring, otherwise replace the wiring.
Caution for safety reasons, the replacement of the LBC is **mandatory** in dealing with this fault. **Replace the LBC component code 938**.
Refit the battery pack and carry out an electrical test.

AFTER REPAIR	Follow the instructions.

DF520 DTC3/44 PRESENT OR STORED	BATTERY CELL NO. 8 VOLTAGE

CONSIGNES	**Special notes:** The charging of the battery pack stops. STOP light illuminated **Note:** at least one of the battery cells is excessively drained below 2 V.

If the fault is stored: reproduce the fault by charging the battery pack using the vehicle.
Open the battery pack and remove the bar plug in order to reach the terminals of the modules.
Check the voltage of the module located using a multimeter and compare it with the value measured with the Clip. If the module shows undervoltage, replace the unit concerned with a module balanced with the voltage of the other modules.
If the module does not show excess voltage, check **the continuity and insulation between the** following connections: • **Pin 1** of the module connector (8 pin connector) • **Pin 11** of the 40 pin BMS connector for **module 4** (cells 7 and 8) Then check the continuity and the insulation of the following connections: • **Pin 6** of the module connector (8 pin connector) • **Pin 31** of the 40 pin BMS connector for **module 4** (cells 7 and 8) Finally check the insulation and continuity of the following connections: • **Pin 8** of the module connector (8 pin connector) • **Pin 12** of the 40 pin BMS connector for **module 4** (cells 7 and 8) If the connection is faulty and if there is a repair procedure (see **Technical Note 6015A (Renault), Repairing electrical wiring, Wiring: Precautions for repair**), repair the wiring, otherwise replace the wiring.
Caution for safety reasons, the replacement of the LBC is **mandatory** in dealing with this fault. **Replace the LBC component code 938**.
Refit the battery pack and carry out an electrical test.

AFTER REPAIR	Follow the instructions.

DF521 DTC3/45 PRESENT OR STORED	BATTERY CELL NO. 9 VOLTAGE

CONSIGNES	**Special notes:** The charging of the battery pack stops. STOP light illuminated **Note:** at least one of the battery cells is excessively drained below 2 V.

If the fault is stored: reproduce the fault by charging the battery pack using the vehicle.
Open the battery pack and remove the bar plug in order to reach the terminals of the modules.
Check the voltage of the module located using a multimeter and compare it with the value measured with the Clip. If the module shows undervoltage, replace the unit concerned with a module balanced with the voltage of the other modules.
If the module does not show excess voltage, check **the continuity and insulation between the** following connections: • **Pin 1** of the module connector (8 pin connector) • **Pin 13** of the 40 pin BMS connector for **module 5** (cells 9 and 10) Then check the continuity and the insulation of the following connections: • **Pin 6** of the module connector (8 pin connector) • **Pin 33** of the 40 pin BMS connector for **module 5** (cells 9 and 10) Finally check the insulation and continuity of the following connections: • **Pin 8** of the module connector (8 pin connector) • **Pin 14** of the 40 pin BMS connector for **module 5** (cells 9 and 10) If the connection is faulty and if there is a repair procedure (see **Technical Note 6015A (Renault), Repairing electrical wiring, Wiring: Precautions for repair**), repair the wiring, otherwise replace the wiring.
Caution for safety reasons, the replacement of the LBC is **mandatory** in dealing with this fault. **Replace the LBC component code 938**.
Refit the battery pack and carry out an electrical test.

AFTER REPAIR	Follow the instructions.

DF522 DTC3/46 PRESENT OR STORED	BATTERY CELL NO. 10 VOLTAGE

CONSIGNES	**Special notes:** The charging of the battery pack stops. STOP light illuminated **Note:** at least one of the battery cells is excessively drained below 2 V.

If the fault is stored: reproduce the fault by charging the battery pack using the vehicle.
Open the battery pack and remove the bar plug in order to reach the terminals of the modules.
Check the voltage of the module located using a multimeter and compare it with the value measured with the Clip. If the module shows undervoltage, replace the unit concerned with a module balanced with the voltage of the other modules.
If the module does not show excess voltage, check **the continuity and insulation between the** following connections: • **Pin 1** of the module connector (8 pin connector) • **Pin 13** of the 40 pin BMS connector for **module 5** (cells 9 and 10) Then check the continuity and the insulation of the following connections: • **Pin 6** of the module connector (8 pin connector) • **Pin 33** of the 40 pin BMS connector for **module 5** (cells 9 and 10) Finally check the insulation and continuity of the following connections: • **Pin 8** of the module connector (8 pin connector) • **Pin 14** of the 40 pin BMS connector for **module 5** (cells 9 and 10) If the connection is faulty and if there is a repair procedure (see **Technical Note 6015A (Renault), Repairing electrical wiring, Wiring: Precautions for repair**), repair the wiring, otherwise replace the wiring.
Caution for safety reasons, the replacement of the LBC is **mandatory** in dealing with this fault. **Replace the LBC component code 938**.
Refit the battery pack and carry out an electrical test.

AFTER REPAIR	Follow the instructions.

DF523 DTC3/47 PRESENT OR STORED	BATTERY CELL NO. 11 VOLTAGE

CONSIGNES	**Special notes:** The charging of the battery pack stops. STOP light illuminated **Note:** at least one of the battery cells is excessively drained below 2 V.

If the fault is stored: reproduce the fault by charging the battery pack using the vehicle.
Open the battery pack and remove the bar plug in order to reach the terminals of the modules.
Check the voltage of the module located using a multimeter and compare it with the value measured with the Clip. If the module shows undervoltage, replace the unit concerned with a module balanced with the voltage of the other modules.
If the module does not show excess voltage, check **the continuity and insulation between the** following connections: • **Pin 1** of the module connector (8 pin connector) • **Pin 36** of the 40 pin BMS connector for **module 6** (cells 11 and 12) Then check the continuity and the insulation of the following connections: • **Pin 6** of the module connector (8 pin connector) • **Pin 16** of the 40 pin BMS connector for **module 6** (cells 11 and 12) Finally check the insulation and continuity of the following connections: • **Pin 8** of the module connector (8 pin connector) • **Pin 17** of the 40 pin BMS connector for **module 6** (cells 11 and 12) If the connection is faulty and if there is a repair procedure (see **Technical Note 6015A (Renault), Repairing electrical wiring, Wiring: Precautions for repair**), repair the wiring, otherwise replace the wiring.
Caution for safety reasons, the replacement of the LBC is **mandatory** in dealing with this fault. **Replace the LBC component code 938**.
Refit the battery pack and carry out an electrical test.

AFTER REPAIR	Follow the instructions.

DF524 DTC3/48 PRESENT OR STORED	BATTERY CELL NO. 12 VOLTAGE

CONSIGNES	**Special notes:** The charging of the battery pack stops. STOP light illuminated **Note:** at least one of the battery cells is excessively drained below 2 V.

If the fault is stored: reproduce the fault by charging the battery pack using the vehicle.
Open the battery pack and remove the bar plug in order to reach the terminals of the modules.
Check the voltage of the module located using a multimeter and compare it with the value measured with the Clip. If the module shows undervoltage, replace the unit concerned with a module balanced with the voltage of the other modules.
If the module does not show excess voltage, check **the continuity and insulation between the** following connections: • **Pin 1** of the module connector (8 pin connector) • **Pin 36** of the 40 pin BMS connector for **module 6** (cells 11 and 12) Then check the continuity and the insulation of the following connections: • **Pin 6** of the module connector (8 pin connector) • **Pin 16** of the 40 pin BMS connector for **module 6** (cells 11 and 12) Finally check the insulation and continuity of the following connections: • **Pin 8** of the module connector (8 pin connector) • **Pin 17** of the 40 pin BMS connector for **module 6** (cells 11 and 12) If the connection is faulty and if there is a repair procedure (see **Technical Note 6015A (Renault), Repairing electrical wiring, Wiring: Precautions for repair**), repair the wiring, otherwise replace the wiring.
Caution for safety reasons, the replacement of the LBC is **mandatory** in dealing with this fault. **Replace the LBC component code 938**.
Refit the battery pack and carry out an electrical test.

AFTER REPAIR	Follow the instructions.

DF525 DTC3/49 PRESENT OR STORED	BATTERY CELL NO. 13 VOLTAGE

CONSIGNES	**Special notes:** The charging of the battery pack stops. STOP light illuminated **Note:** at least one of the battery cells is excessively drained below 2 V.

If the fault is stored: reproduce the fault by charging the battery pack using the vehicle.
Open the battery pack and remove the bar plug in order to reach the terminals of the modules.
Check the voltage of the module located using a multimeter and compare it with the value measured with the Clip. If the module shows undervoltage, replace the unit concerned with a module balanced with the voltage of the other modules.
If the module does not show excess voltage, check **the continuity and insulation between the** following connections: • **Pin 1** of the module connector (8 pin connector) • **Pin 20** of the 40 pin BMS connector for **module 7** (cells 13 and 14) Then check the continuity and the insulation of the following connections: • **Pin 6** of the module connector (8 pin connector) • **Pin 39** of the 40 pin BMS connector for **module 7** (cells 13 and 14) Finally check the insulation and continuity of the following connections: • **Pin 8** of the module connector (8 pin connector) • **Pin 40** of the 40 pin BMS connector for **module 7** (cells 13 and 14) If the connection is faulty and if there is a repair procedure (see **Technical Note 6015A (Renault), Repairing electrical wiring, Wiring: Precautions for repair**), repair the wiring, otherwise replace the wiring.
Caution for safety reasons, the replacement of the LBC is **mandatory** in dealing with this fault. **Replace the LBC component code 938**.
Refit the battery pack and carry out an electrical test.

AFTER REPAIR	Follow the instructions.

DF526 DTC3/50 PRESENT OR STORED	BATTERY CELL NO. 14 VOLTAGE

CONSIGNES	**Special notes:** The charging of the battery pack stops. STOP light illuminated **Note:** at least one of the battery cells is excessively drained below 2 V.

If the fault is stored: reproduce the fault by charging the battery pack using the vehicle.
Open the battery pack and remove the bar plug in order to reach the terminals of the modules.
Check the voltage of the module located using a multimeter and compare it with the value measured with the Clip. If the module shows undervoltage, replace the unit concerned with a module balanced with the voltage of the other modules.
If the module does not show excess voltage, check **the continuity and insulation between the** following connections: • **Pin 1** of the module connector (8 pin connector) • **Pin 20** of the 40 pin BMS connector for **module 7** (cells 13 and 14) Then check the continuity and the insulation of the following connections: • **Pin 6** of the module connector (8 pin connector) • **Pin 39** of the 40 pin BMS connector for **module 7** (cells 13 and 14) Finally check the insulation and continuity of the following connections: • **Pin 8** of the module connector (8 pin connector) • **Pin 40** of the 40 pin BMS connector for **module 7** (cells 13 and 14) If the connection is faulty and if there is a repair procedure (see **Technical Note 6015A (Renault), Repairing electrical wiring, Wiring: Precautions for repair**), repair the wiring, otherwise replace the wiring.
Caution for safety reasons, the replacement of the LBC is **mandatory** in dealing with this fault. **Replace the LBC component code 938**.
Refit the battery pack and carry out an electrical test.

AFTER REPAIR	Follow the instructions.

DF146 DTC3/51 PRESENT OR STORED	BATTERY TRAY UNDERVOLTAGE LEVEL 1

CONSIGNES	**Special notes:** The charging of the battery pack stops. SERV warning light on **Note:** the battery pack voltage has gone below 42 V.

If the fault is stored: reproduce the fault by charging the battery pack using the vehicle.
Open the battery pack and remove the bar plug in order to reach the terminals of the modules.
Check the voltage of the cells using the parameters for reading the voltage of the cells in the LBC computer. Note the number of the cell showing undervoltage.
Check the voltage of the module located using a multimeter and compare it with the value measured with the Clip. If the module shows undervoltage, replace the unit concerned with a module balanced with the voltage of the other modules.
If the module does not show excess voltage, check **the continuity and insulation of the** following connections: • **Pin 1** of the module connector (8 pin connector) • **Pin 2** of the 40 pin BMS connector for **module 1** (cell 1 and 2) • **Pin 5** of the 40 pin BMS connector for **module 2** (cell 3 and 4) • **Pin 8** of the 40 pin BMS connector for **module 3** (cells 5 and 6) • **Pin 11** of the 40 pin BMS connector for **module 4** (cells 7 and 8) • **Pin 13** of the 40 pin BMS connector for **module 5** (cells 9 and 10) • **Pin 36** of the 40 pin BMS connector for **module 6** (cells 11 and 12) • **Pin 20** of the 40 pin BMS connector for **module 7** (cells 13 and 14) Then check the continuity and the insulation of the following connections: • **Pin 6** of the module connector (8 pin connector) • **Pin 22** of the BMS 40 pin connector for **module 1** (cell 1 and 2) • **Pin 25** of the BMS 40 pin connector for **module 2** (cell 3 and 4) • **Pin 28** of the 40 pin BMS connector for **module 3** (cells 5 and 6) • **Pin 31** of the 40 pin BMS connector for **module 4** (cells 7 and 8) • **Pin 33** of the 40 pin BMS connector for **module 5** (cells 9 and 10) • **Pin 16** of the 40 pin BMS connector for **module 6** (cells 11 and 12) • **Pin 39** of the 40 pin BMS connector for **module 7** (cells 13 and 14)

AFTER REPAIR	Follow the instructions.

Finally check the insulation and continuity of the following connections: • **Pin 8** of the module connector (8 pin connector) • **Pin 3** of the BMS 40 pin connector for **module 1** (cell 1 and 2) • **Pin 6** of the BMS 40 pin connector for **module 2** (cell 3 and 4) • **Pin 9** of the 40 pin BMS connector for **module 3** (cells 5 and 6) • **Pin 12** of the 40 pin BMS connector for **module 4** (cells 7 and 8) • **Pin 14** of the 40 pin BMS connector for **module 5** (cells 9 and 10) • **Pin 17** of the 40 pin BMS connector for **module 6** (cells 11 and 12) • **Pin 40** of the 40 pin BMS connector for **module 7** (cells 13 and 14) If the connection is faulty and if there is a repair procedure (see **Technical Note 6015A (Renault), Repairing electrical wiring, Wiring: Precautions for repair**), repair the wiring, otherwise replace the wiring.
If the connection is not faulty, replace the **LBC computer component code 938**.
Refit the battery pack and carry out an electrical test.

AFTER REPAIR	Follow the instructions.

DF147 DTC3/52 PRESENT OR STORED	BATTERY TRAY UNDERVOLTAGE LEVEL 2

CONSIGNES	**Special notes:** The charging of the battery pack stops. STOP light illuminated **Note:** the battery pack voltage has gone below 39.2 V.

If the fault is stored: reproduce the fault by charging the battery pack using the vehicle.
Open the battery pack and remove the bar plug in order to reach the terminals of the modules.
Check the voltage of the cells using the parameters for reading the voltage of the cells in the LBC computer. Note the number of the cell showing undervoltage.
Check the voltage of the module located using a multimeter and compare it with the value measured with the Clip. If the module shows undervoltage, replace the unit concerned with a module balanced with the voltage of the other modules.
If the module does not show excess voltage, check **the continuity and insulation of the** following connections: • **Pin 1** of the module connector (8 pin connector) • **Pin 2** of the 40 pin BMS connector for **module 1** (cell 1 and 2) • **Pin 5** of the 40 pin BMS connector for **module 2** (cell 3 and 4) • **Pin 8** of the 40 pin BMS connector for **module 3** (cells 5 and 6) • **Pin 11** of the 40 pin BMS connector for **module 4** (cells 7 and 8) • **Pin 13** of the 40 pin BMS connector for **module 5** (cells 9 and 10) • **Pin 36** of the 40 pin BMS connector for **module 6** (cells 11 and 12) • **Pin 20** of the 40 pin BMS connector for **module 7** (cells 13 and 14) Then check the continuity and the insulation of the following connections: • **Pin 6** of the module connector (8 pin connector) • **Pin 22** of the BMS 40 pin connector for **module 1** (cell 1 and 2) • **Pin 25** of the BMS 40 pin connector for **module 2** (cell 3 and 4) • **Pin 28** of the 40 pin BMS connector for **module 3** (cells 5 and 6) • **Pin 31** of the 40 pin BMS connector for **module 4** (cells 7 and 8) • **Pin 33** of the 40 pin BMS connector for **module 5** (cells 9 and 10) • **Pin 16** of the 40 pin BMS connector for **module 6** (cells 11 and 12) • **Pin 39** of the 40 pin BMS connector for **module 7** (cells 13 and 14)

AFTER REPAIR	Follow the instructions.

Finally check the insulation and continuity of the following connections: • **Pin 8** of the module connector (8 pin connector) • **Pin 3** of the BMS 40 pin connector for **module 1** (cell 1 and 2) • **Pin 6** of the BMS 40 pin connector for **module 2** (cell 3 and 4) • **Pin 9** of the 40 pin BMS connector for **module 3** (cells 5 and 6) • **Pin 12** of the 40 pin BMS connector for **module 4** (cells 7 and 8) • **Pin 14** of the 40 pin BMS connector for **module 5** (cells 9 and 10) • **Pin 17** of the 40 pin BMS connector for **module 6** (cells 11 and 12) • **Pin 40** of the 40 pin BMS connector for **module 7** (cells 13 and 14) If the connection is faulty and if there is a repair procedure (see **Technical Note 6015A (Renault), Repairing electrical wiring, Wiring: Precautions for repair**), repair the wiring, otherwise replace the wiring.
If the connection is not faulty, replace the **LBC computer component code 938**.
Refit the battery pack and carry out an electrical test.

AFTER REPAIR	Follow the instructions.

DF148 DTC3/53 PRESENT OR STORED	BATTERY TRAY UNDERVOLTAGE LEVEL 3

CONSIGNES	**Special notes:** The charging of the battery pack stops. SERV warning light on **Note:** the battery pack voltage has gone below 35V

If the fault is stored: reproduce the fault by charging the battery pack using the vehicle.
Open the battery pack and remove the bar plug in order to reach the terminals of the modules.
Check the voltage of the cells using the parameters for reading the voltage of the cells in the LBC computer. Note the number of the cell showing undervoltage.
Check the voltage of the module located using a multimeter and compare it with the value measured with the Clip. If the module shows undervoltage, replace the unit concerned with a module balanced with the voltage of the other modules.
If the module does not show excess voltage, check **the continuity and insulation of the** following connections: • **Pin 1** of the module connector (8 pin connector) • **Pin 2** of the 40 pin BMS connector for **module 1** (cell 1 and 2) • **Pin 5** of the 40 pin BMS connector for **module 2** (cell 3 and 4) • **Pin 8** of the 40 pin BMS connector for **module 3** (cells 5 and 6) • **Pin 11** of the 40 pin BMS connector for **module 4** (cells 7 and 8) • **Pin 13** of the 40 pin BMS connector for **module 5** (cells 9 and 10) • **Pin 36** of the 40 pin BMS connector for **module 6** (cells 11 and 12) • **Pin 20** of the 40 pin BMS connector for **module 7** (cells 13 and 14) Then check the continuity and the insulation of the following connections: • **Pin 6** of the module connector (8 pin connector) • **Pin 22** of the BMS 40 pin connector for **module 1** (cell 1 and 2) • **Pin 25** of the BMS 40 pin connector for **module 2** (cell 3 and 4) • **Pin 28** of the 40 pin BMS connector for **module 3** (cells 5 and 6) • **Pin 31** of the 40 pin BMS connector for **module 4** (cells 7 and 8) • **Pin 33** of the 40 pin BMS connector for **module 5** (cells 9 and 10) • **Pin 16** of the 40 pin BMS connector for **module 6** (cells 11 and 12) • **Pin 39** of the 40 pin BMS connector for **module 7** (cells 13 and 14)

AFTER REPAIR	Follow the instructions.

Finally check the insulation and continuity of the following connections: • **Pin 8** of the module connector (8 pin connector) • **Pin 3** of the BMS 40 pin connector for **module 1** (cell 1 and 2) • **Pin 6** of the BMS 40 pin connector for **module 2** (cell 3 and 4) • **Pin 9** of the 40 pin BMS connector for **module 3** (cells 5 and 6) • **Pin 12** of the 40 pin BMS connector for **module 4** (cells 7 and 8) • **Pin 14** of the 40 pin BMS connector for **module 5** (cells 9 and 10) • **Pin 17** of the 40 pin BMS connector for **module 6** (cells 11 and 12) • **Pin 40** of the 40 pin BMS connector for **module 7** (cells 13 and 14) If the connection is faulty and if there is a repair procedure (see **Technical Note 6015A (Renault), Repairing electrical wiring, Wiring: Precautions for repair**), repair the wiring, otherwise replace the wiring.
If the connection is not faulty, replace the **LBC computer component code 938**.
Refit the battery pack and carry out an electrical test.

AFTER REPAIR	Follow the instructions.

DF113 DTC3/54 PRESENT OR STORED	TRACTION BATTERY TRAY TEMPERATURE

CONSIGNES	**Special notes:** The charging of the battery pack stops. **Note:** the battery pack temperature has gone above 48°C.

If the fault is stored: reproduce the fault by discharging the battery pack using the vehicle.

Check the temperature of the cells using the parameters for reading the temperature of the cells in the LBC computer. Note the number of the cell showing Excess temperature.

Check the temperature of the module located using a temperature measuring device and compare it with the value measured with the Clip.
If the module shows Excess temperature, replace the unit concerned with a module balanced with the voltage of the other modules.

If the temperature is equal to the ambient temperature, measure the resistance between the following connections:

- **Pin 1 and Pin 21** of the 40 pin BMS connector for **module 1** (cell 1 and 2)
- **Pin 4 and Pin 24** of the 40 pin BMS connector for **module 2** (cell 3 and 4)
- **Pin 7 and Pin 26** of the 40 pin BMS connector for **module 3** (cells 5 and 6)
- **Pin 10 and Pin 29** of the 40 pin BMS connector for **module 4** (cells 7 and 8)
- **Pin 15 and Pin 35** of the 40 pin BMS connector for **module 5** (cells 9 and 10)
- **Pin 18 and Pin 37** of the 40 pin BMS connector for **module 6** (cells 11 and 12)
- **Pin 19 and Pin 38** of the 40 pin BMS connector for **module 7** (cells 13 and 14)

Compare the value measured with the table of resistance values on page 18.
If the value does not correspond to the value in the table, replace the unit concerned with a new module balanced at the average of the other modules.

If the value is correct, check **the continuity and insulation** of the following connections:

- **Pin 4** of the module connector involved (8 pin connector)
- **Pin 1** of the 40 pin BMS connector for module 1 (cell 1 and 2)
- **Pin 4** of the 40 pin BMS connector for module 2 (cell 3 and 4)
- **Pin 7** of the 40 pin BMS connector for module 3 (cells 5 and 6)
- **Pin 10** of the 40 pin BMS connector for module 4 (cells 7 and 8)
- **Pin 15** of the 40 pin BMS connector for module 5 (cells 9 and 10)
- **Pin 18** of the 40 pin BMS connector for module 6 (cells 11 and 12)
- **Pin 19** of the 40 pin BMS connector for module 7 (cells 13 and 14)

AFTER REPAIR	Follow the instructions.

Then check **the continuity and the insulation** of the following connections: • **Pin 4** of the module connector involved (8 pin connector) • **Pin 21** of the 40 pin BMS connector for **module 1** (cell 1 and 2) • **Pin 24** of the BMS 40 pin connector for **module 2** (cell 3 and 4) • **Pin 26** of the 40 pin BMS connector for **module 3** (cells 5 and 6) • **Pin 29** of the 40 pin BMS connector for **module 4** (cells 7 and 8) • **Pin 35** of the 40 pin BMS connector for **module 5** (cells 9 and 10) • **Pin 37** of the 40 pin BMS connector for **module 6** (cells 11 and 12) • **Pin 38** of the 40 pin BMS connector for **module 7** (cells 13 and 14) If the connection is faulty and if there is a repair procedure (see **Technical Note 6015A (Renault), Repairing electrical wiring, Wiring: Precautions for repair**), repair the wiring, otherwise replace the wiring.
If the connection is not faulty, replace the **LBC computer component code 938**.
Refit the battery pack and carry out an electrical test.

AFTER REPAIR	Follow the instructions.

DF372 DTC3/55 PRESENT OR STORED	TRACTION BATTERY TRAY TEMPERATURE

CONSIGNES	**Special notes:** The charging of the battery pack stops. The STOP warning light is lit. **Note:** the battery pack temperature has gone above 54°C.

If the fault is stored: reproduce the fault by discharging the battery pack using the vehicle.

Check the temperature of the cells using the parameters for reading the temperature of the cells in the LBC computer. Note the number of the cell showing Excess temperature.

Check the temperature of the module located using a temperature measuring device and compare it with the value measured with the Clip.
If the module shows Excess temperature, replace the unit concerned with a module balanced with the voltage of the other modules.

If the temperature is equal to the ambient temperature, measure the resistance between the following connections:

- **Pin 1 and Pin 21** of the 40 pin BMS connector for **module 1** (cell 1 and 2)
- **Pin 4 and Pin 24** of the 40 pin BMS connector for **module 2** (cell 3 and 4)
- **Pin 7 and Pin 26** of the 40 pin BMS connector for **module 3** (cells 5 and 6)
- **Pin 10 and Pin 29** of the 40 pin BMS connector for **module 4** (cells 7 and 8)
- **Pin 15 and Pin 35** of the 40 pin BMS connector for **module 5** (cells 9 and 10)
- **Pin 18 and Pin 37** of the 40 pin BMS connector for **module 6** (cells 11 and 12)
- **Pin 19 and Pin 38** of the 40 pin BMS connector for **module 7** (cells 13 and 14)

Compare the value measured with the table of resistance values on page 18.
If the value does not correspond to the value in the table, replace the unit concerned with a new module balanced at the average of the other modules.

If the value is correct, check **the continuity and insulation** of the following connections:

- **Pin 4** of the module connector involved (8 pin connector)
- **Pin 1** of the BMS 40 pin connector for **module 1** (cell 1 and 2)
- **Pin 4** of the BMS 40 pin connector for **module 2** (cell 3 and 4)
- **Pin 7** of the 40 pin BMS connector for **module 3** (cells 5 and 6)
- **Pin 10** of the 40 pin BMS connector for **module 4** (cells 7 and 8)
- **Pin 15** of the 40 pin BMS connector for **module 5** (cells 9 and 10)
- **Pin 18** of the 40 pin BMS connector for **module 6** (cells 11 and 12)
- **Pin 19** of the 40 pin BMS connector for **module 7** (cells 13 and 14)

AFTER REPAIR	Follow the instructions.

Then check **the continuity and the insulation** of the following connections: • **Pin 4** of the module connector involved (8 pin connector) • **Pin 21** of the 40 pin BMS connector for **module 1** (cell 1 and 2) • **Pin 24** of the BMS 40 pin connector for **module 2** (cell 3 and 4) • **Pin 26** of the 40 pin BMS connector for **module 3** (cells 5 and 6) • **Pin 29** of the 40 pin BMS connector for **module 4** (cells 7 and 8) • **Pin 35** of the 40 pin BMS connector for **module 5** (cells 9 and 10) • **Pin 37** of the 40 pin BMS connector for **module 6** (cells 11 and 12) • **Pin 38** of the 40 pin BMS connector for **module 7** (cells 13 and 14) If the connection is faulty and if there is a repair procedure (see **Technical Note 6015A (Renault), Repairing electrical wiring, Wiring: Precautions for repair**), repair the wiring, otherwise replace the wiring.
If the connection is not faulty, replace the **LBC computer component code 938**.
Refit the battery pack and carry out an electrical test.

AFTER REPAIR	Follow the instructions.

DF373 DTC3/56 PRESENT OR STORED	TRACTION BATTERY TRAY TEMPERATURE

CONSIGNES	**Special notes:** The charging of the battery pack stops. The STOP warning light is lit. **Note:** the battery pack temperature has gone above 58°C.

If the fault is stored: reproduce the fault by discharging the battery pack using the vehicle.

Check the temperature of the cells using the parameters for reading the temperature of the cells in the LBC computer. Note the number of the cell showing Excess temperature.

Check the temperature of the module located using a temperature measuring device and compare it with the value measured with the Clip.
If the module shows Excess temperature, replace the unit concerned with a module balanced with the voltage of the other modules.

If the temperature is equal to the ambient temperature, measure the resistance between the following connections:

- **Pin 1 and Pin 21** of the 40 pin BMS connector for module 1 (cell 1 and 2)
- **Pin 4 and Pin 24** of the 40 pin BMS connector for module 2 (cell 3 and 4)
- **Pin 7 and Pin 26** of the 40 pin BMS connector for module 3 (cells 5 and 6)
- **Pin 10 and Pin 29** of the 40 pin BMS connector for module 4 (cells 7 and 8)
- **Pin 15 and Pin 35** of the 40 pin BMS connector for module 5 (cells 9 and 10)
- **Pin 18 and Pin 37** of the 40 pin BMS connector for module 6 (cells 11 and 12)
- **Pin 19 and Pin 38** of the 40 pin BMS connector for module 7 (cells 13 and 14)

Compare the value measured with the table of resistance values on page 18.
If the value does not correspond to the value in the table, replace the unit concerned with a new module balanced at the average of the other modules.

If the value is correct, check **the continuity and insulation** of the following connections:

- **Pin 4** of the module connector involved (8 pin connector)
- **Pin 1** of the BMS 40 pin connector for **module 1** (cell 1 and 2)
- **Pin 4** of the BMS 40 pin connector for **module 2** (cell 3 and 4)
- **Pin 7** of the 40 pin BMS connector for **module 3** (cells 5 and 6)
- **Pin 10** of the 40 pin BMS connector for **module 4** (cells 7 and 8)
- **Pin 15** of the 40 pin BMS connector for **module 5** (cells 9 and 10)
- **Pin 18** of the 40 pin BMS connector for **module 6** (cells 11 and 12)
- **Pin 19** of the 40 pin BMS connector for **module 7** (cells 13 and 14)

AFTER REPAIR	Follow the instructions.

Then check **the continuity and the insulation** of the following connections: • **Pin 4** of the module connector involved (8 pin connector) • **Pin 21** of the 40 pin BMS connector for **module 1** (cell 1 and 2) • **Pin 24** of the BMS 40 pin connector for **module 2** (cell 3 and 4) • **Pin 26** of the 40 pin BMS connector for **module 3** (cells 5 and 6) • **Pin 29** of the 40 pin BMS connector for **module 4** (cells 7 and 8) • **Pin 35** of the 40 pin BMS connector for **module 5** (cells 9 and 10) • **Pin 37** of the 40 pin BMS connector for **module 6** (cells 11 and 12) • **Pin 38** of the 40 pin BMS connector for **module 7** (cells 13 and 14) If the connection is faulty and if there is a repair procedure (see **Technical Note 6015A (Renault), Repairing electrical wiring, Wiring: Precautions for repair**), repair the wiring, otherwise replace the wiring.
If the connection is not faulty, replace the **LBC computer component code 938**.
Refit the battery pack and carry out an electrical test.

AFTER REPAIR	Follow the instructions.

DF404 DTC3/86 PRESENT OR STORED	60 V BATTERY

CONSIGNES	**Special notes:** The charging of the battery pack stops. **Note:** the battery pack temperature has gone below -5°C.

If the fault is stored: reproduce the fault by discharging the battery pack using the vehicle.

Check the temperature of the cells using the parameters for reading the temperature of the cells in the LBC computer. Note the number of the cell showing a low temperature.

Check the temperature of the module located using a temperature measuring device and compare it with the value measured with the Clip.
If the module shows a low temperature, replace the unit concerned with a module balanced with the voltage of the other modules.

If the temperature is equal to the ambient temperature, measure the resistance between the following connections:

- **Pin 1 and Pin 21** of the 40 pin BMS connector for **module 1** (cell 1 and 2)
- **Pin 4 and Pin 24** of the 40 pin BMS connector for **module 2** (cell 3 and 4)
- **Pin 7 and Pin 26** of the 40 pin BMS connector for **module 3** (cells 5 and 6)
- **Pin 10 and Pin 29** of the 40 pin BMS connector for **module 4** (cells 7 and 8)
- **Pin 15 and Pin 35** of the 40 pin BMS connector for **module 5** (cells 9 and 10)
- **Pin 18 and Pin 37** of the 40 pin BMS connector for **module 6** (cells 11 and 12)
- **Pin 19 and Pin 38** of the 40 pin BMS connector for **module 7** (cells 13 and 14)

Compare the value measured with the table of resistance values on page 18.
If the value does not correspond to the value in the table, replace the unit concerned with a new module balanced at the average of the other modules.

If the value is correct, check **the continuity and insulation** of the following connections:

- **Pin 4** of the module connector involved (8 pin connector)
- **Pin 1** of the BMS 40 pin connector for **module 1** (cell 1 and 2)
- **Pin 4** of the BMS 40 pin connector for **module 2** (cell 3 and 4)
- **Pin 7** of the 40 pin BMS connector for **module 3** (cells 5 and 6)
- **Pin 10** of the 40 pin BMS connector for **module 4** (cells 7 and 8)
- **Pin 15** of the 40 pin BMS connector for **module 5** (cells 9 and 10)
- **Pin 18** of the 40 pin BMS connector for **module 6** (cells 11 and 12)
- **Pin 19** of the 40 pin BMS connector for **module 7** (cells 13 and 14)

AFTER REPAIR	Follow the instructions.

Then check **the continuity and the insulation** of the following connections: • **Pin 4** of the module connector involved (8 pin connector) • **Pin 21** of the 40 pin BMS connector for **module 1** (cell 1 and 2) • **Pin 24** of the BMS 40 pin connector for **module 2** (cell 3 and 4) • **Pin 26** of the 40 pin BMS connector for **module 3** (cells 5 and 6) • **Pin 29** of the 40 pin BMS connector for **module 4** (cells 7 and 8) • **Pin 35** of the 40 pin BMS connector for **module 5** (cells 9 and 10) • **Pin 37** of the 40 pin BMS connector for **module 6** (cells 11 and 12) • **Pin 38** of the 40 pin BMS connector for **module 7** (cells 13 and 14) If the connection is faulty and if there is a repair procedure (see **Technical Note 6015A (Renault), Repairing electrical wiring, Wiring: Precautions for repair**), repair the wiring, otherwise replace the wiring.
If the connection is not faulty, replace the **LBC computer component code 938**.
Refit the battery pack and carry out an electrical test.

AFTER REPAIR	Follow the instructions.

DF166 DTC3/57 PRESENT OR STORED	CELL VOLTAGE DIFFERENCE WHEN STARTING

CONSIGNES	**Special notes:** The charging of the battery pack stops. SERV warning light on **Note:** the voltage difference between the lowest cell and the greatest voltage cell exceeds 200mV or 20% depending on the different versions of computers.

If the fault is stored: reproduce the fault by discharging the battery pack using the vehicle.
Check the voltage of the cells using the parameters for reading the voltage of the cells in the LBC computer. Note the number of the cell whose voltage deviates from that of the other cells.
Open the battery pack and remove the bar plug in order to reach the terminals of the modules.
Check the voltage of the module located using a multimeter and compare it with the value measured with the Clip. If the module shows a voltage deviation, replace the module concerned with a module balanced with the voltage of the other modules.
If the module does not show excess voltage, check **the continuity and insulation of the** following connections: • **Pin 1** of the module connector (8 pin connector) • **Pin 2** of the 40 pin BMS connector for **module 1** (cell 1 and 2) • **Pin 5** of the 40 pin BMS connector for **module 2** (cell 3 and 4) • **Pin 8** of the 40 pin BMS connector for **module 3** (cells 5 and 6) • **Pin 11** of the 40 pin BMS connector for **module 4** (cells 7 and 8) • **Pin 13** of the 40 pin BMS connector for **module 5** (cells 9 and 10) • **Pin 36** of the 40 pin BMS connector for **module 6** (cells 11 and 12) • **Pin 20** of the 40 pin BMS connector for **module 7** (cells 13 and 14) Then check the continuity and the insulation of the following connections: • **Pin 6** of the module connector (8 pin connector) • **Pin 22** of the BMS 40 pin connector for **module 1** (cell 1 and 2) • **Pin 25** of the BMS 40 pin connector for **module 2** (cell 3 and 4) • **Pin 28** of the 40 pin BMS connector for **module 3** (cells 5 and 6) • **Pin 31** of the 40 pin BMS connector for **module 4** (cells 7 and 8) • **Pin 33** of the 40 pin BMS connector for **module 5** (cells 9 and 10) • **Pin 16** of the 40 pin BMS connector for **module 6** (cells 11 and 12) • **Pin 39** of the 40 pin BMS connector for **module 7** (cells 13 and 14)

AFTER REPAIR	Follow the instructions.

Finally check the insulation and continuity of the following connections: • **Pin 8** of the module connector (8 pin connector) • **Pin 3** of the BMS 40 pin connector for **module 1** (cell 1 and 2) • **Pin 6** of the BMS 40 pin connector for **module 2** (cell 3 and 4) • **Pin 9** of the 40 pin BMS connector for **module 3** (cells 5 and 6) • **Pin 12** of the 40 pin BMS connector for **module 4** (cells 7 and 8) • **Pin 14** of the 40 pin BMS connector for **module 5** (cells 9 and 10) • **Pin 17** of the 40 pin BMS connector for **module 6** (cells 11 and 12) • **Pin 40** of the 40 pin BMS connector for **module 7** (cells 13 and 14) If the connection is faulty and if there is a repair procedure (see **Technical Note 6015A (Renault), Repairing electrical wiring, Wiring: Precautions for repair**), repair the wiring, otherwise replace the wiring.
If the connection is not faulty, replace the **LBC computer component code 938**.
Refit the battery pack and carry out an electrical test.

AFTER REPAIR	Follow the instructions.

DF149 DTC3/58 PRESENT OR STORED	BATTERY TRAY CURRENT

CONSIGNES	**Special notes:** The charging of the battery pack stops. STOP light illuminated **Note:** the current passing through the battery pack during charging is greater than 200A for at least 1 s.

First check the faults and the correct operation of **Charger component code 2093**.
If the fault is stored: reproduce the fault by charging or discharging the battery pack using the vehicle.
Check parameter "**PR145 CURRENT MEASURED BY THE LBC**", no load no active traction, the value should **be lower than 10A**.
If the value is greater than 10A, check the **continuity and insulation** between the **bar plug current sensor** and **pins 11, 12 and 24 of the 24 pin BMS connector**. If the connection is faulty and if there is a repair procedure (see **Technical Note 6015A (Renault), Repairing electrical wiring, Wiring: Precautions for repair**), repair the wiring, otherwise replace the wiring.
If the connections are not faulty **replace the plug with the integral current sensor**.
If the problem is still present, replace the **LBC computer component code 938**.
Refit the battery pack and carry out an electrical test.

AFTER REPAIR	Follow the instructions.

DF377 DTC3/59 PRESENT OR STORED	BATTERY TRAY CURRENT

CONSIGNES	**Special notes:** The charging of the battery pack stops. STOP light illuminated **Note:** the current passing through the battery pack during discharge is greater than -400A for at least 1s.

First check the faults and the correct operation of **the inverter component code 1063**.
If the fault is stored: reproduce the fault by charging or discharging the battery pack using the vehicle.
Check parameter "**PR145 CURRENT MEASURED BY LBC**", with no load and no active traction, the value should not be **be greater than -10A**.
If the value is greater than 10A, check the **continuity and insulation** between the **bar plug current sensor** and **pins 11, 12 and 24 of the 24 pin BMS connector**. If the connection is faulty and if there is a repair procedure (see **Technical Note 6015A (Renault), Repairing electrical wiring, Wiring: Precautions for repair**), repair the wiring, otherwise replace the wiring.
If the connections are not faulty **replace the plug with the integral current sensor**.
If the problem is still present, replace the **LBC computer component code 938**.
Refit the battery pack and carry out an electrical test.

AFTER REPAIR	Follow the instructions.

DF114 DTC3/60 PRESENT OR STORED	PEB INTERLOCK

CONSIGNES	**Special notes:** The charging of the battery pack stops. **Note:** connector RCS800 is disconnected or partially disconnected.

Check the condition and correct operation of connector RCS800.
If the fault is still present, open the battery pack and replace connector RCS800.
Refit the battery pack and carry out an electrical test.

AFTER REPAIR	Follow the instructions.

DF153 DTC3/61 PRESENT OR STORED	BCB INTERLOCK

CONSIGNES	**Special notes:** The charging of the battery pack stops. **Note:** connector APEX280 is disconnected or partially disconnected.

Check the condition and correct operation of connector APEX280.
If the fault is still present, open the battery pack and replace connector APEX280.
Refit the battery pack and carry out an electrical test.

AFTER REPAIR	Follow the instructions.

DF540 DTC3/62 PRESENT OR STORED	LBC

CONSIGNES	**Special notes:** The charging of the battery pack stops. STOP light illuminated **Note:** internal CAN communication within BMS is faulty.

Check the condition and correct operation of the 40 pin BMS connector
If the fault is still present, replace the **BMS component code 938**.
Refit the battery pack and carry out an electrical test.

AFTER REPAIR	Follow the instructions.

DF168 DTC3/80 PRESENT OR STORED	CELL LINE UNDERVOLTAGE

CONSIGNES	**Special notes:** The charging of the battery pack stops. Traction impossible. STOP light illuminated **Note:** The minimum cell voltage measured is less than 0.2 V.

If the fault is stored: reproduce the fault by discharging the battery pack using the vehicle.
Check the voltage of the cells using the parameters for reading the voltage of the cells in the LBC computer. Note the number of the cell whose voltage deviates from that of the other cells.
Open the battery pack and remove the bar plug in order to reach the terminals of the modules.
Check the voltage of the module located using a multimeter and compare it with the value measured with the Clip. If the module shows a voltage deviation, replace the module concerned with a module balanced with the voltage of the other modules.
If the module does not show excess voltage, check **the continuity and insulation of the** following connections: • **Pin 1** of the module connector (8 pin connector) • **Pin 2** of the 40 pin BMS connector for **module 1** (cell 1 and 2) • **Pin 5** of the 40 pin BMS connector for **module 2** (cell 3 and 4) • **Pin 8** of the 40 pin BMS connector for **module 3** (cells 5 and 6) • **Pin 11** of the 40 pin BMS connector for **module 4** (cells 7 and 8) • **Pin 13** of the 40 pin BMS connector for **module 5** (cells 9 and 10) • **Pin 36** of the 40 pin BMS connector for **module 6** (cells 11 and 12) • **Pin 20** of the 40 pin BMS connector for **module 7** (cells 13 and 14) Then check the continuity and the insulation of the following connections: • **Pin 6** of the module connector (8 pin connector) • **Pin 22** of the BMS 40 pin connector for **module 1** (cell 1 and 2) • **Pin 25** of the BMS 40 pin connector for **module 2** (cell 3 and 4) • **Pin 28** of the 40 pin BMS connector for **module 3** (cells 5 and 6) • **Pin 31** of the 40 pin BMS connector for **module 4** (cells 7 and 8) • **Pin 33** of the 40 pin BMS connector for **module 5** (cells 9 and 10) • **Pin 16** of the 40 pin BMS connector for **module 6** (cells 11 and 12) • **Pin 39** of the 40 pin BMS connector for **module 7** (cells 13 and 14)

AFTER REPAIR	Follow the instructions.

Finally check the insulation and continuity of the following connections: • **Pin 8** of the module connector (8 pin connector) • **Pin 3** of the BMS 40 pin connector for **module 1** (cell 1 and 2) • **Pin 6** of the BMS 40 pin connector for **module 2** (cell 3 and 4) • **Pin 9** of the 40 pin BMS connector for **module 3** (cells 5 and 6) • **Pin 12** of the 40 pin BMS connector for **module 4** (cells 7 and 8) • **Pin 14** of the 40 pin BMS connector for **module 5** (cells 9 and 10) • **Pin 17** of the 40 pin BMS connector for **module 6** (cells 11 and 12) • **Pin 40** of the 40 pin BMS connector for **module 7** (cells 13 and 14) If the connection is faulty and if there is a repair procedure (see **Technical Note 6015A (Renault), Repairing electrical wiring, Wiring: Precautions for repair**), repair the wiring, otherwise replace the wiring.
If the connection is not faulty, replace the **LBC computer component code 938**.
Refit the battery pack and carry out an electrical test.

AFTER REPAIR	Follow the instructions.

DF543 DTC3/90 PRESENT OR STORED	LBC

CONSIGNES	**Special notes:** The charging of the battery pack stops. STOP light illuminated **Note:** Internal fault in the LBC

Check the condition and correct operation of the 40 pin BMS connector
If the fault is still present, replace the **BMS component code 938**.
Refit the battery pack and carry out an electrical test.

AFTER REPAIR	Follow the instructions.

DF215 DTC3/85 PRESENT OR STORED	TEMPERATURE SENSOR CIRCUIT

CONSIGNES	**Special notes:** The charging of the battery pack stops. STOP light illuminated **Note:** at least one of the torques on the busbar on the modules is faulty.

If the fault is stored: reproduce the fault by discharging the battery pack using the vehicle.
Open the battery pack and perform the checks below.
Check the tightening torque, the modules should be fixed to the housing at a torque of: **10 N.m** **If the tightening torque is not correct, tighten all the bolts to the correct torque.**
Check the tightening torque, the bar plug must be tightened on to the modules at a torque of: **8 N.m** **If the tightening torque is not correct, tighten all the bolts to the correct torque.**
Refit the battery pack and carry out an electrical test.

AFTER REPAIR	Follow the instructions.

3. Fault Finding - Symptom

CONSIGNES	**Only consult this customer complaint after a complete check with the diagnostic tool.** There must be no **present** or **stored** faults.
	Special notes: Use the **Wiring Diagrams Technical Note X09**.

Symptom	Traction Impossible.

CONSIGNES	**Special notes:** not possible to put the vehicle in traction mode, the vehicle does not start

Open the battery pack and perform the checks below.
Measure the continuity between the input and output of the inverter supply relays (RP) and the inverter power relay (CP1)
If one of the relays is **jammed in the closed position, replace the relay concerned**.
Use tool **ELE2060 to close the inverter supply relay (RP) manually**
Carry out a **voltage measurement between + (2238) and – on the bar plug**, the voltage should be equal to the voltage of the battery pack. If the value measured does not correspond to the expected value **replace the bar plug**.
Carry out a **voltage measurement between the + terminal (2238) and the inverter supply relay output (RP-45U)**. The voltage should be equal to the battery pack voltage.
If the value measured does not correspond to the expected value, carry out a **continuity check** between **the + terminal (2238) and the inverter supply relay output (45U)**. If the connection is faulty **check the condition of the inverter supply relay fuse**. If the fuse is faulty, replace it.

AFTER REPAIR	Follow the instructions.

If the fuse is correct, carry out a **continuity check between terminals C1 and D1 of the inverter supply relay**. If the connection is faulty **replace the inverter supply relay**.
If the fuse and relay are correct, **replace the wiring of the inverter supply relay**.
Use tool **ELE2060 to close the inverter power relay manually (CP1)**
Carry out a **voltage measurement between the + terminal (2238) and the power output (938) of connector RCS800**, the voltage should be equal to the voltage of the battery pack.
If the value does not correspond to the expected value, carry out a continuity test **between the + terminal (2238) and the power output (938) of connector RCS800**. If the connection is faulty **check the condition of the inverter power relay fuse**. If the fuse is faulty, replace it.
If the fuse is correct, carry out a **continuity check between terminals B1 and C1 of the inverter power relay**. If the connection is faulty **replace the inverter power relay**.
If the fuse and relay are correct **replace the wiring of the inverter power relay**.
Refit the battery pack and carry out an electrical test.

AFTER REPAIR	Follow the instructions.

Symptom	Charging Impossible

CONSIGNES	**Special notes:** Charging is not possible, the vehicle does not charge

Open the battery pack and carry out a thorough visual check that there are no signs of overheating of the charge circuit. (discoloured cable, melted adhesive etc.) **If there are signs of overheating, as a precaution, replace the charge power relay (CP2), the charge power relay fuse and the charge circuit wiring.**
Measure the continuity between the input and output of the charger power relay
If the relay is **jammed in the closed position, replace the relay concerned**.
Use tool **ELE2060 to close the charger power relay (CP2) manually**
Carry out a **voltage measurement between + (2238) and – of the C1 output of the charge power relay**. The voltage should correspond to the battery pack voltage.
If the value measured does not correspond to the expected value, carry out a **continuity check** between the **+ terminal (2238) and output C1 of the charge power relay**. If the connection is faulty **check the condition of the charge power relay fuse**. If the fuse is faulty, replace it.
If the fuse is correct, carry out a **continuity check between terminals B1 and C1 of the charge power relay**. If the connection is faulty **replace the charge power relay**.
If the fuse and relay are correct **replace the charge circuit wiring**.
Refit the battery pack and carry out an electrical test.

AFTER REPAIR	Follow the instructions.

Symptom	Loss of BMS Communication

CONSIGNES	**Special notes:** CAN communication with BMS is not possible, fault-finding by Clip is impossible.

Supply the LBC with a stabilised 12 V supply limited to 1A.
Measure the consumption of the computer, if the computer consumes 100mA for at least 10 seconds then **replace the LBC computer component code 938**.
If the fault is still present, replace the **LBC computer component code 938**.
Refit the battery pack and carry out an electrical test.

AFTER REPAIR	Follow the instructions.

Symptom	Connector APEX280 with signs of overheating

CONSIGNES	**Special notes:** the charger power connector (APEX280) has signs of overheating.

Open the battery pack and replace connector APEX280
Refit the battery pack and carry out an electrical test.

AFTER REPAIR	Follow the instructions.

Symptom	Yazaki signal connector oxidised

CONSIGNES	**Special notes:** the Yazaki signal connector shows signs of oxidation.

Open the battery pack and replace the 12 pin Yazaki signal connector.
Refit the battery pack and carry out an electrical test.

AFTER REPAIR	Follow the instructions.

TYRES: REMOVAL - REFITTING

REMOVAL

1. REMOVAL PREPARATION OPERATION

- Position the vehicle on a two-post lift Vehicle: Towing and lifting (02A, Lifting equipment).
- Remove:
  - the wheel in question (see 35A, Wheels and tyres, Wheel: Removal - Refitting),
  - the balance weights,
  - the valve mechanism.

2. OPERATION FOR REMOVAL OF PART CONCERNED

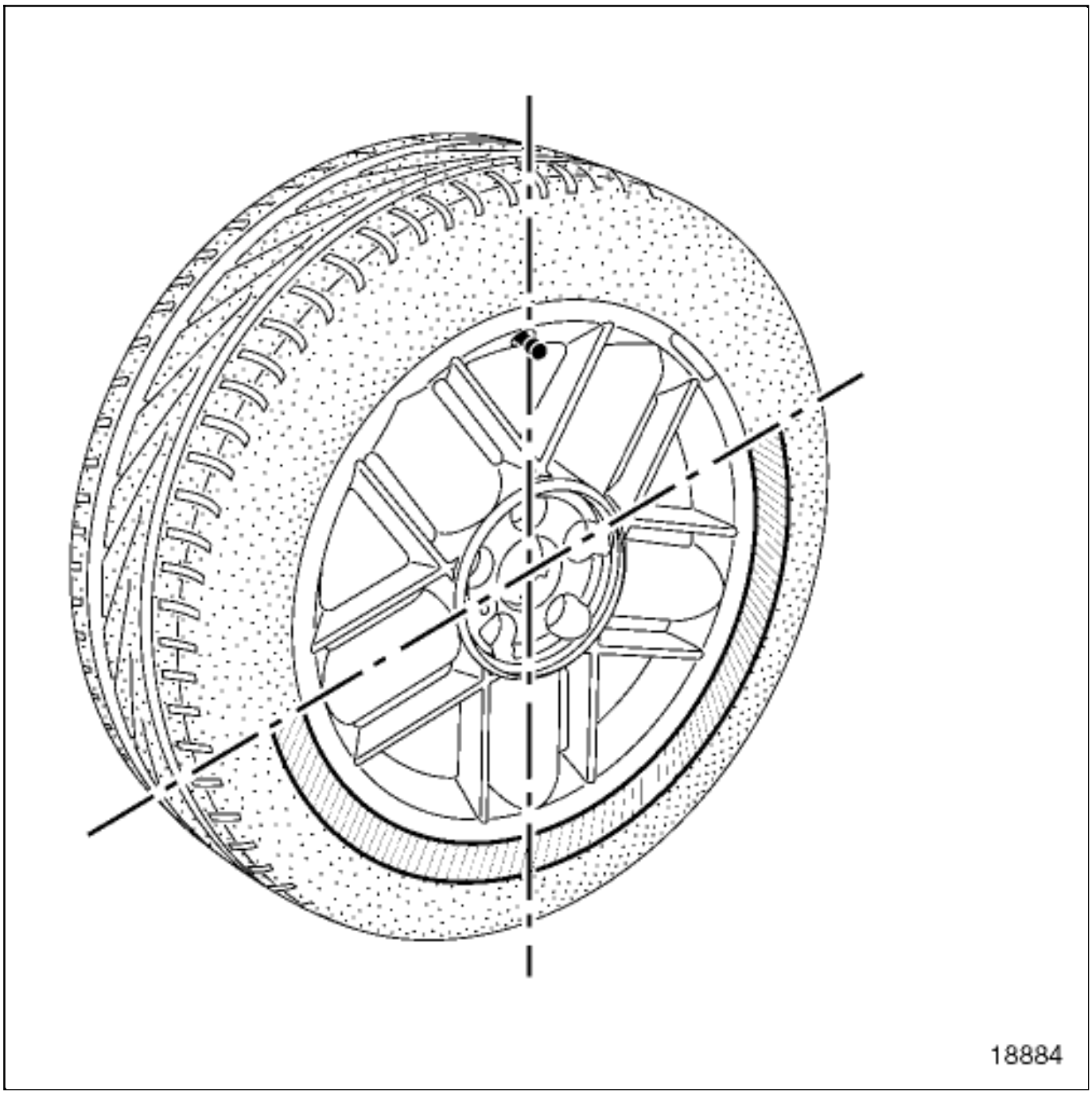

Detach:

- the bead from the outside of the tyre, starting with the side opposite the valve,
- the bead from the inside of the tyre.

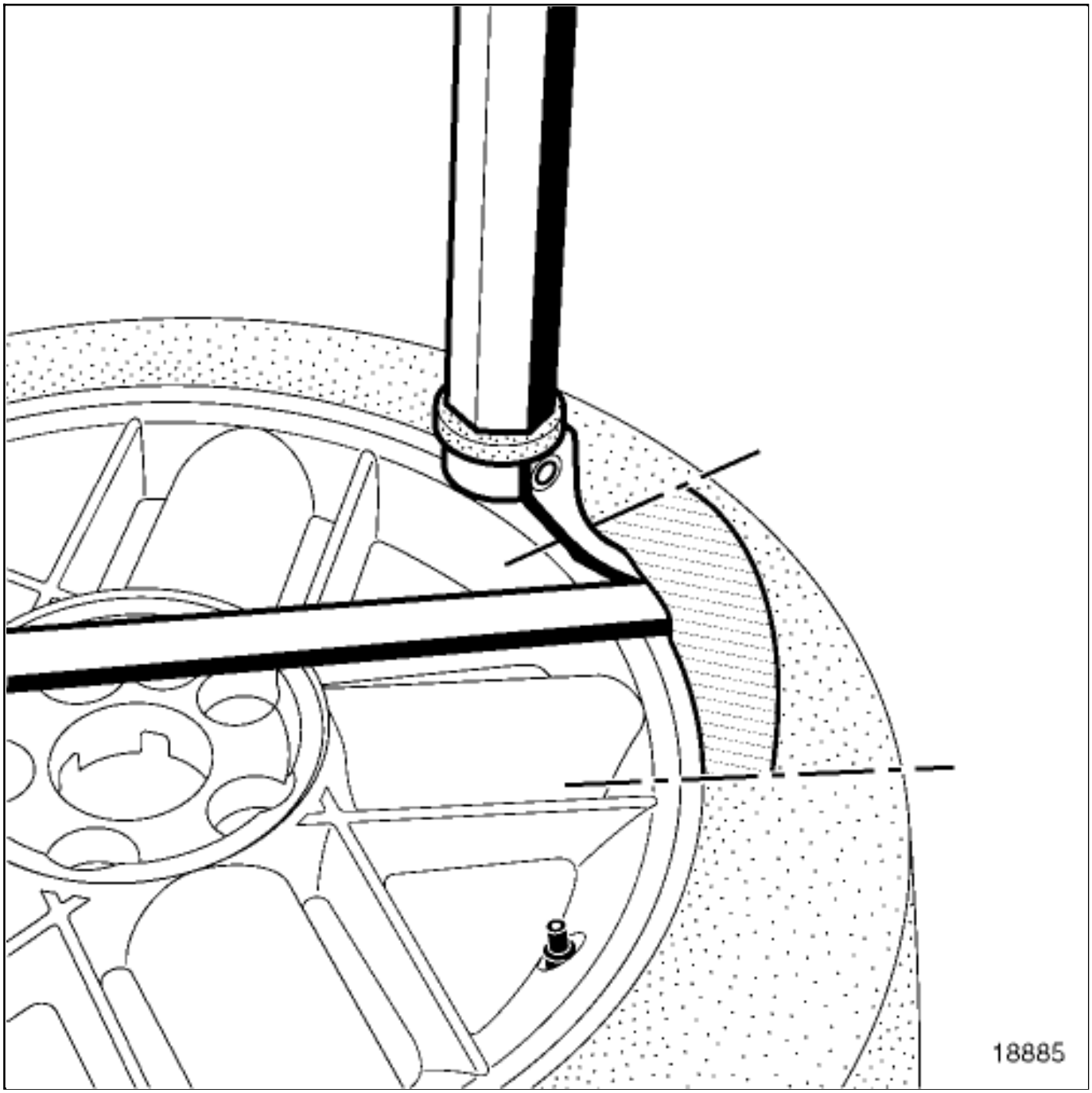

- Position the tyre lever approximately 15 cmfrom the valve on the outside of the wheel rim in order to remove the exterior bead from the tyre.

- Remove the exterior bead of the tyre, finishing at the valve.

- Position the tyre lever approximately 15 cmfrom the valve on the outside of the wheel rim in order to remove the bead from inside the tyre.

- Remove the interior bead of the tyre, finishing at the valve.

REFITTING

1. REFITTING PREPARATION OPERATION

- Lubricate the two tyre beads correctly using the tyre pasteVehicle: Parts and consumables for the repair (04B, Consumables - Products).

2. REFITTING OPERATION FOR PART CONCERNED

- Engage the lower tyre bead approximately 15 cmafter the valve.
- Finish fitting the tyre at the valve.
- Fit the exterior bead approximately 15 cmafter the valve using the tyre lever.
- Inflate the tyre to 3.5 barto press the tyre beads against the wheel rim.

3. FINAL OPERATION

- Refit the valve mechanism.
- Inflate the tyre to the recommended pressure(see 35A, Wheels and tyres, Tyre pressure: Identification) .

Note:

It is not necessary to drive the vehicle before and after a new wheel is balanced.

- Balance the wheel(see 35A, Wheels and tyres, Wheel: Balancing) .

- Refit the wheel in question(see 35A, Wheels and tyres, Wheel: Removal - Refitting) .

Repair-13x05x02-01x37-1-1-1.xml

XSL version : 3.02 du 22/07/11

UCH: REMOVAL - REFITTING

Note, one or more warnings are present in this procedure

Equipment required
Diagnostic tool

WARNING

To avoid all risk of damage to the systems, apply the safety and cleanliness instructions and operation recommendations before carrying out any repair:

Vehicle: Precautions for the repair .

REMOVAL

1. REMOVAL PREPARATION OPERATION

WARNING

DANGER : Risk of serious injuries due to the short-circuiting or the untimely triggering of an electrical system (pyrotechnical parts, windscreen wiper motor, electric fan, etc.) following possible loopback of the 12-volt supply circuit by the voltage transformer.

Please adhere to the instructions regarding cut-off of the 12-volt supply circuit.

If the procedure fails, do not continue with your task and ask an employee who is qualified and authorized to work on a high-voltage onboard network to perform a diagnostic Vehicle: Precautions for the repair .

Disconnect the 12V supply circuit12 V supply circuit : Lockout - Removal of lockout .

- Remove the front bumper upper strip Exterior body front trim assembly: Exploded view .
- Remove the A-pillar trims Exterior body side trim assembly: Exploded view .
- Unclip the front bumper lower trim Exterior body front trim assembly: Exploded view .
- Remove the front bumper trim Exterior body front trim assembly: Exploded view .
- Move aside the front end panel Exterior body front trim assembly: Exploded view .

2. REMOVAL OPERATION

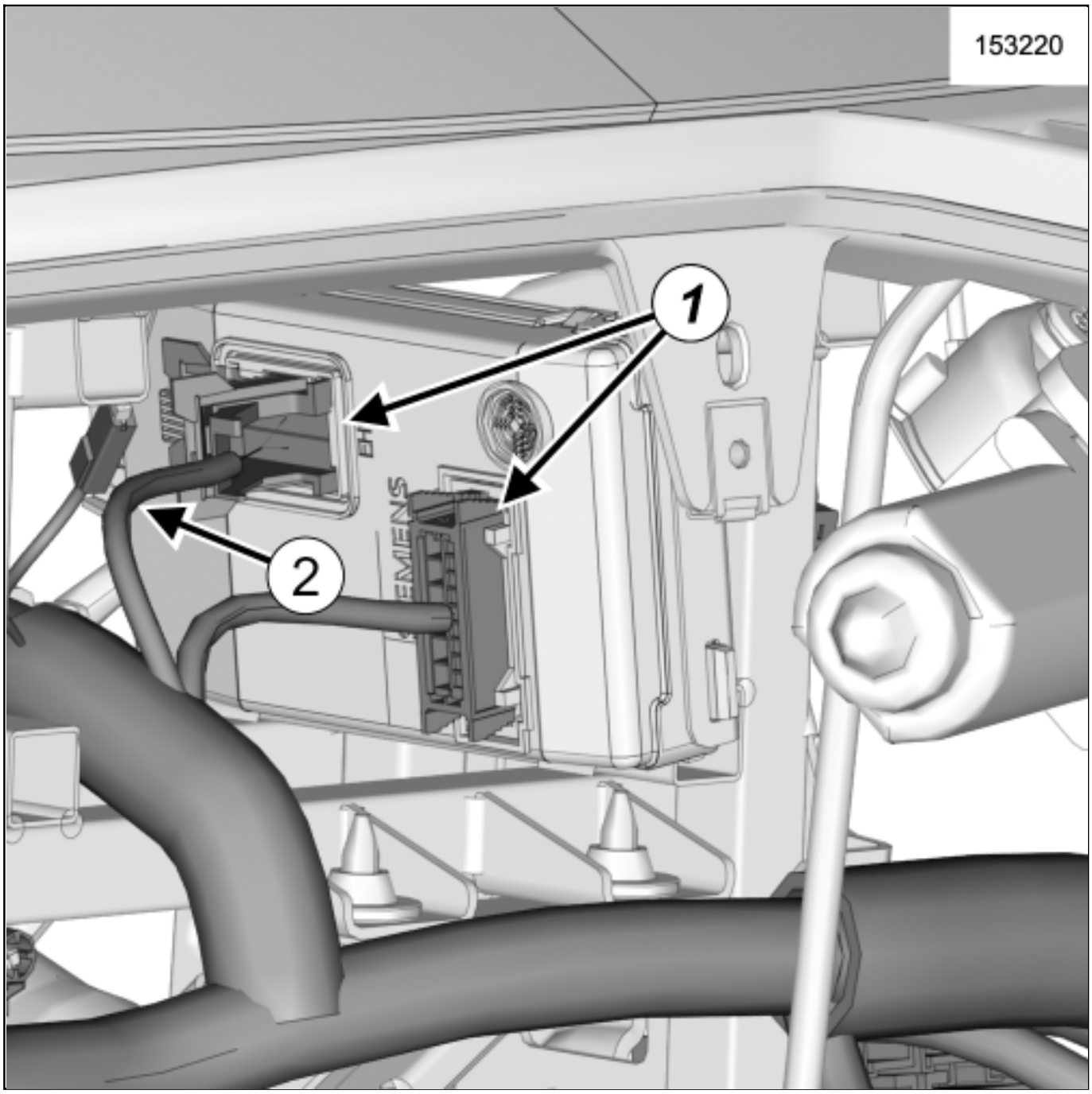

- Disconnect the UCH connectors(1) .

- Remove:
  - the UCH screw(2) ,
  - the UCH.

REFITTING

1. REFITTING OPERATION

- Proceed in the reverse order to removal.

2. FINAL OPERATION

- Connect the 12V supply circuit12 V supply circuit : Lockout - Removal of lockout .

- If replacing, carry out the necessary operations using the Diagnostic tool(see Fault finding - Replacement of components) (87B, Passenger compartment connection unit).

Repair-32x05x01x06-01x37-1-37-1.xml

XSL version : 3.02 du 22/07/11

VEHICLE: LOCKOUT - REMOVAL OF LOCKOUT

Note, one or more warnings are present in this procedure

Special tooling required	
Safety lockout plug padlock of the traction battery	Ele. 1980

Equipment required
Diagnostic tool
Class 00 or 0 electrical insulating gloves
Face shield
Bump cap
Electrical class 00 or 0 safety footwear
Protective overalls (Mainly coton)
Demarcation kit (posts, red and white chains, A4 mounting)

WARNING

To avoid all risk of damage to the systems, apply the safety and cleanliness instructions and operation recommendations before carrying out any repair:

- (see **Battery: Precautions for the repair**) ,
- (see **Wiring: Precautions for the repair**) ,
- (see 01D, Mechanical introduction, Vehicle: Precautions for the repair) .

WARNING

The procedures described below must be performed by qualified personnel authorized to work on a high voltage onboard network.

Any work performed on the vehicle's high voltage network entails a risk of death by electrocution. An operator is authorized by the company that employs him/her, subject to certain mandatory training and skills.

WARNING

DANGER: HIGH VOLTAGE VEHICLE.

Risks of serious burns or electric shock that may prove fatal.

Before carrying out any work on the vehicle, it is essential that you adhere to the instructions regarding vehicle voltage cut-off. This work must be carried out by an employee who is qualified and authorized to work on a high-voltage onboard network (see 01D, Mechanical introduction, Vehicle: Precautions for the repair) .

- Required equipment:
  - Class 00 or 0 electrical insulating gloves,
  - Face shield,
  - Bump cap ,
  - Electrical class 00 or 0 safety footwear,
  - Protective overalls (Mainly coton),
  - Demarcation kit (posts, red and white chains, A4 mounting),
  - Protection for traction battery connector sockets,
  - "disconnection/connection" sheet,
  - "disconnection/connection" instructions.

WARNING

Operators must never work alone in the workshop. There must always be someone else in the vicinity to help the person in danger in the event of a problem.

1. VEHICLE: DISCONNECTION

1- IDENTIFICATION OF THE VEHICLE

- Check the vehicle's identification (registration, VIN) based on the repair order.
- Remove all personal metal objects (jewellery, chains, wedding ring, watch, etc.).
- Position the vehicle on a two-post lift(see **Vehicle: Towing and lifting**) .
- Check the correct operation of the panel instrument display at vehicle start.

Note:

If the panel instrument does not display, do not continue with your task and ask an employee who is qualified and authorized to work on a high-voltage onboard network to perform a diagnostic.

- Check that no traction chain or traction battery fault is indicated on the panel instrument display.

Note:

If there is a defect, do not continue with your task and ask an employee who is qualified and authorized to work on a high-voltage onboard network to perform a diagnostic.

- Perform a KEY-ON KEY-OFF.
- Switch off the vehicle.
- Remove the vehicle keys.

Note:

An automatic feeding function of the 12V battery via the traction battery wakes up every 30 minutes.

It is therefore imperative to finish the lockout of the vehicle in a maximum of 30 minutes after switching off the ignition.

- Put on the handbrake.
- Place the vehicle keys outside the vehicle.
- Mark out the work area using Demarcation kit (posts, red and white chains, A4 mounting)equipment.
- Make sure that no work is in progress.
- Evacuate the work area.
- Remove the engine undertray.

- Wear personal protective equipment:
  - Protective overalls (Mainly coton),
  - Electrical class 00 or 0 safety footwear,
  - Class 00 or 0 electrical insulating gloves,
  - Face shield,
  - Bump cap .

Note:

Check the gloves tightness.

2- SEPARATION AND LOCKING OF POWER SOURCES

- Disconnect external voltage sources (charger wire, external electrical tool).

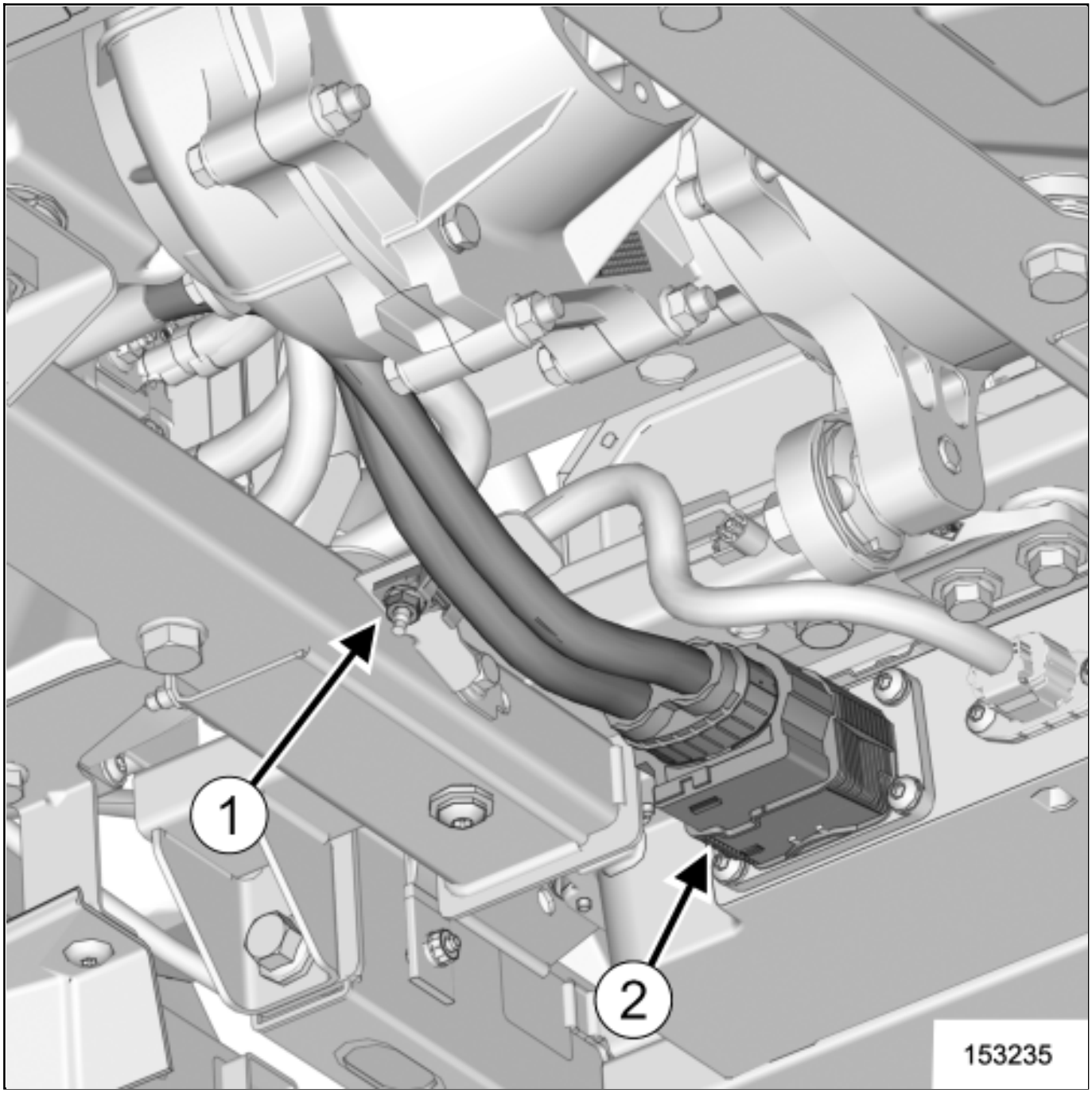
1
2
153235

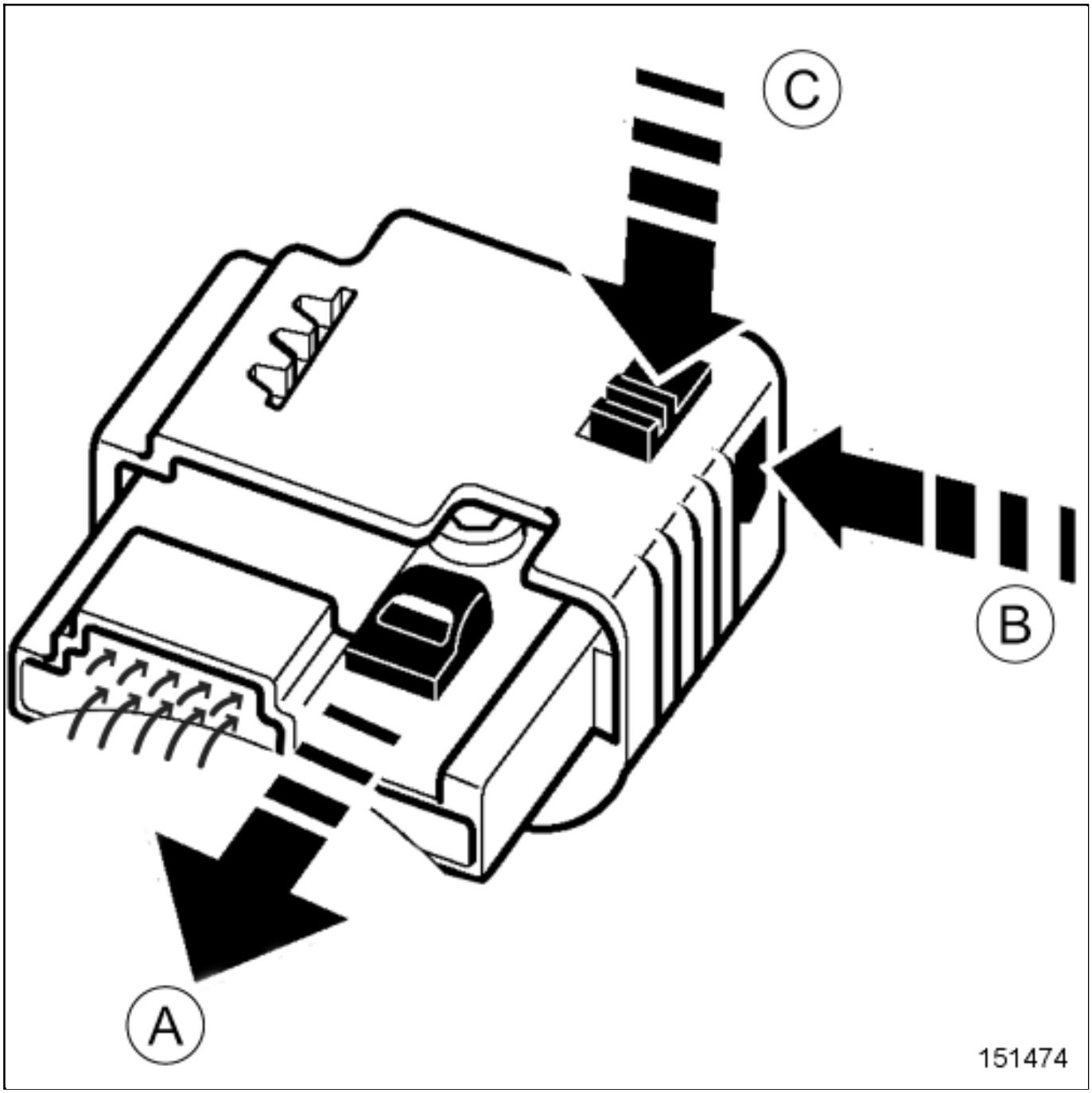

- Remove the "converter - traction battery" wiring support nut(1) .

- Disconnect the "converter - traction battery" wiring connector(2) on the traction battery following the steps specified by the arrows(A) , (B) and (C) .

CAUTION

To prevent contamination of disconnected connectors and sockets, hermetically seal the connectors and sockets using a plastic bag and a securing clip. For traction battery sockets, use traction battery caps(see **Vehicle: Parts and consumables for the repair**) .

❑ Protect the disconnected connectors and sockets(see **Wiring: Precautions for the repair**) .

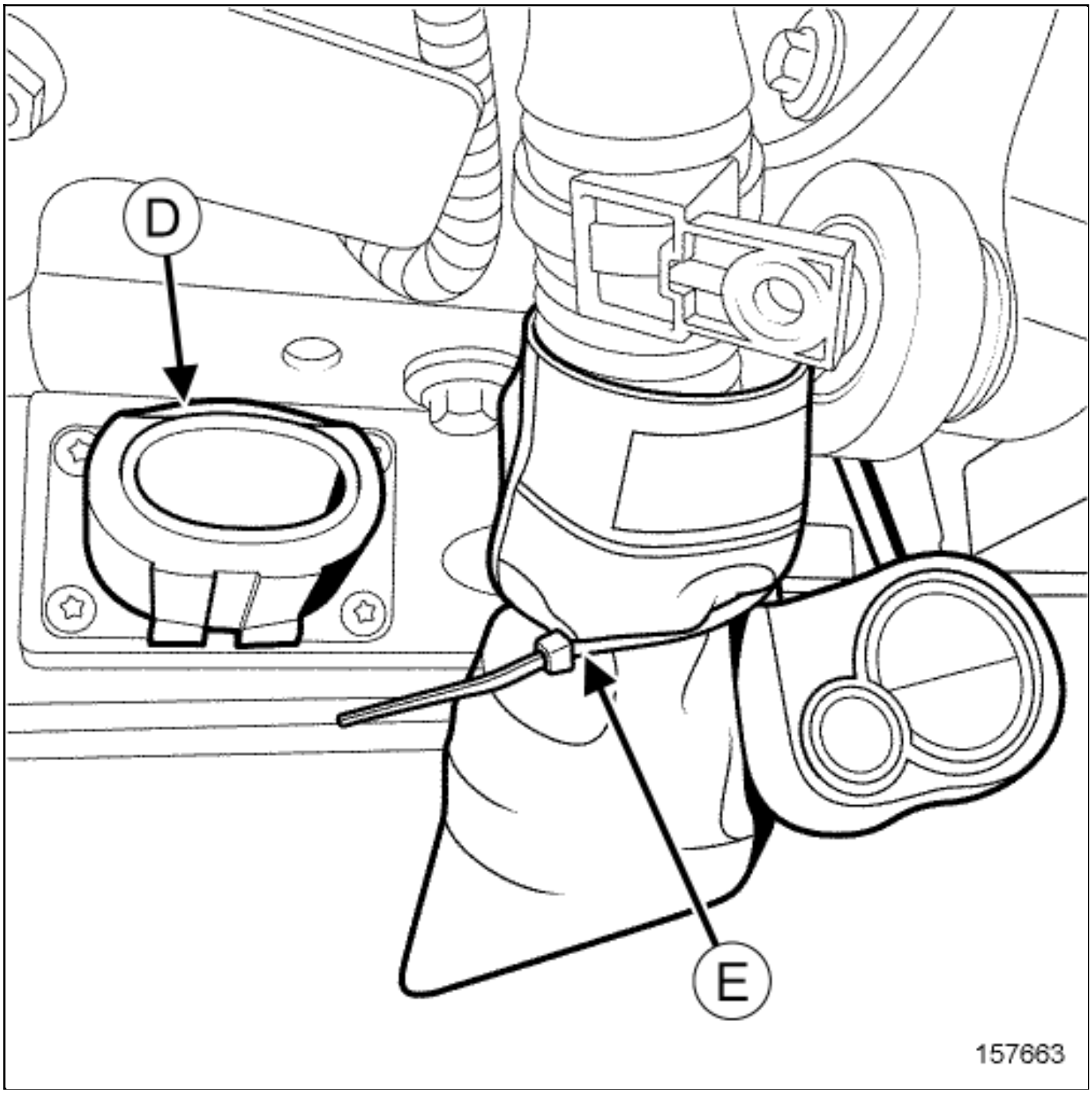

(D) Traction battery cap

(E) Plastic bag collar

❑ Attach the wiring with the toolSafety lockout plug padlock of the traction battery(Ele. 1980) to prevent an undesirable reconnection.

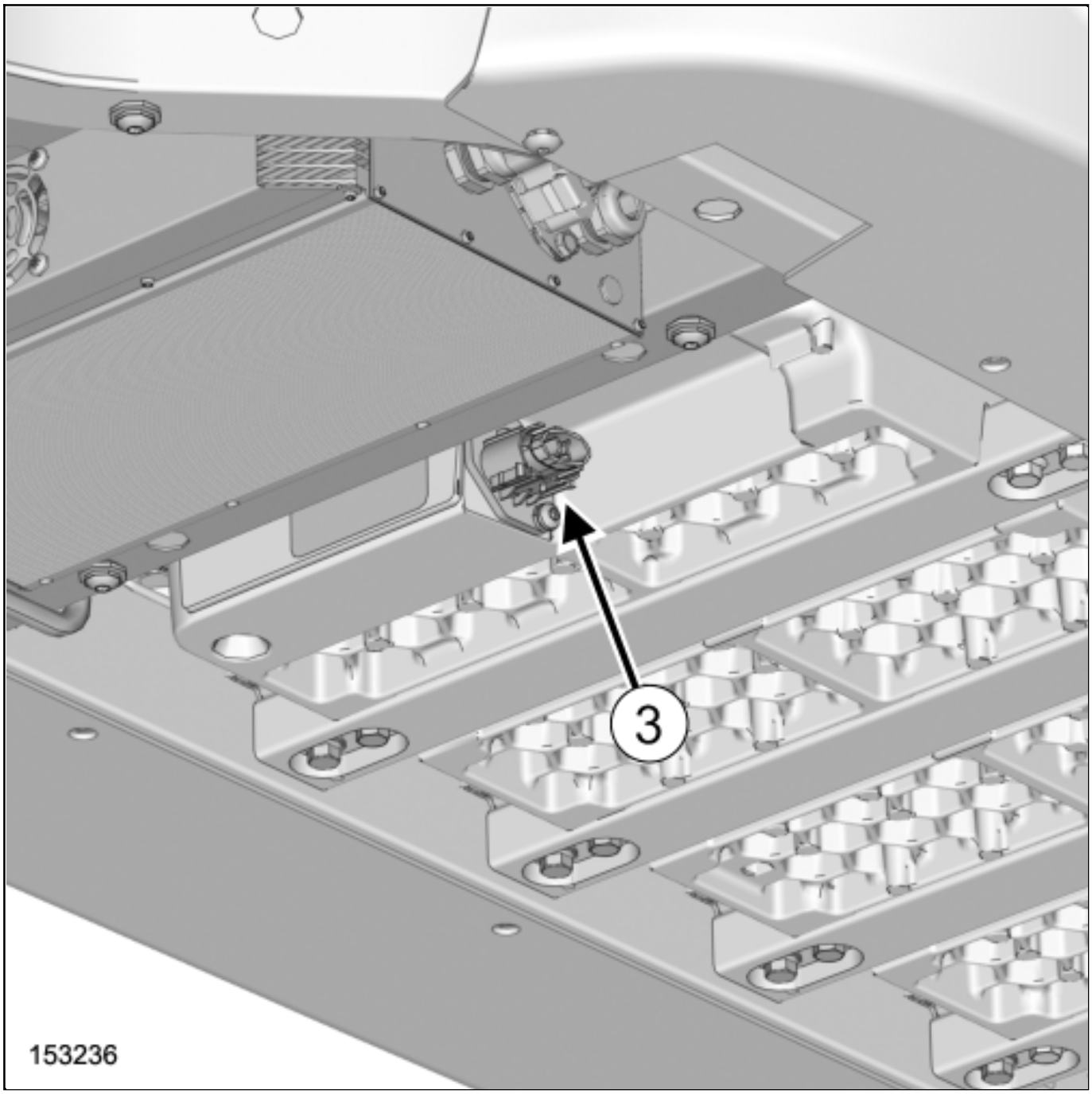

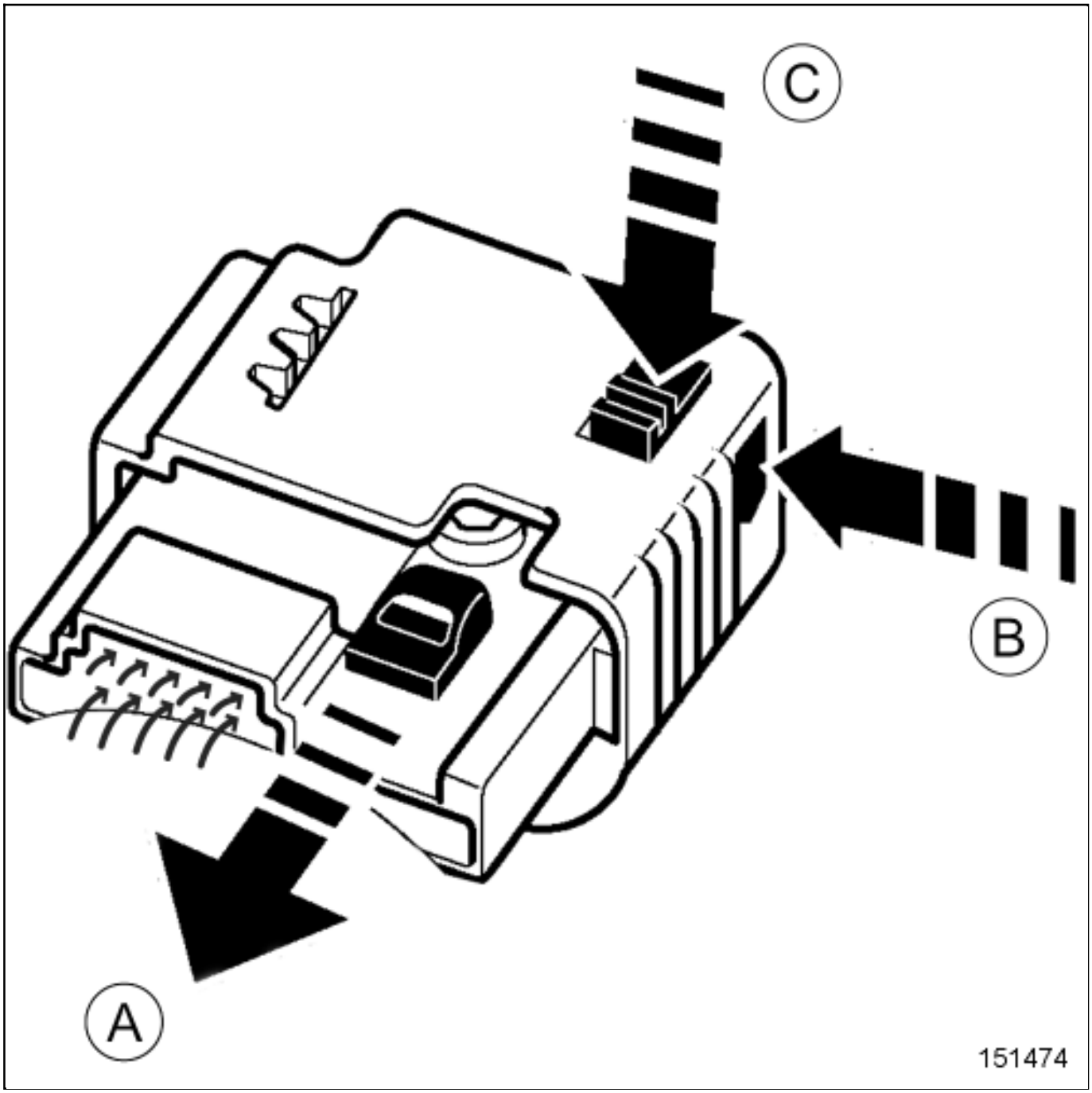

Disconnect the "charger - traction battery" wiring connector(3) on the traction battery following the steps specified by the arrows(A) , (B) and (C) .

CAUTION

To prevent contamination of disconnected connectors and sockets, hermetically seal the connectors and sockets using a plastic bag and a securing clip. For traction battery sockets, use traction battery caps(see **Vehicle: Parts and consumables for the repair**) .

Protect the disconnected connectors and sockets(see **Wiring: Precautions for the repair**) .

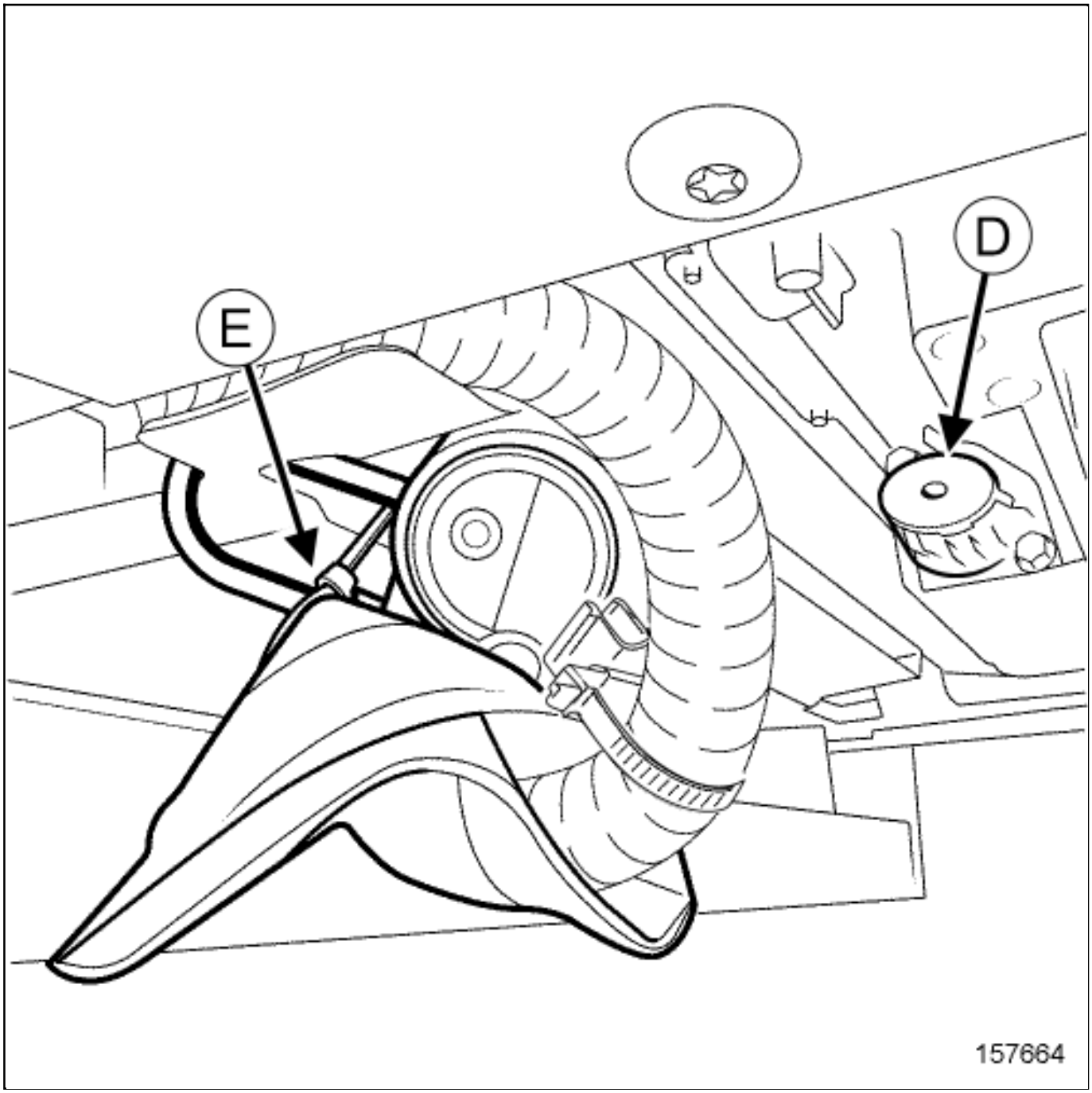

(D) Traction battery cap

(E) Plastic bag collar

❑

Attach the wiring with the toolSafety lockout plug padlock of the traction battery(Ele. 1980) to prevent an undesirable reconnection.

❑

Remove the personal protective equipment.

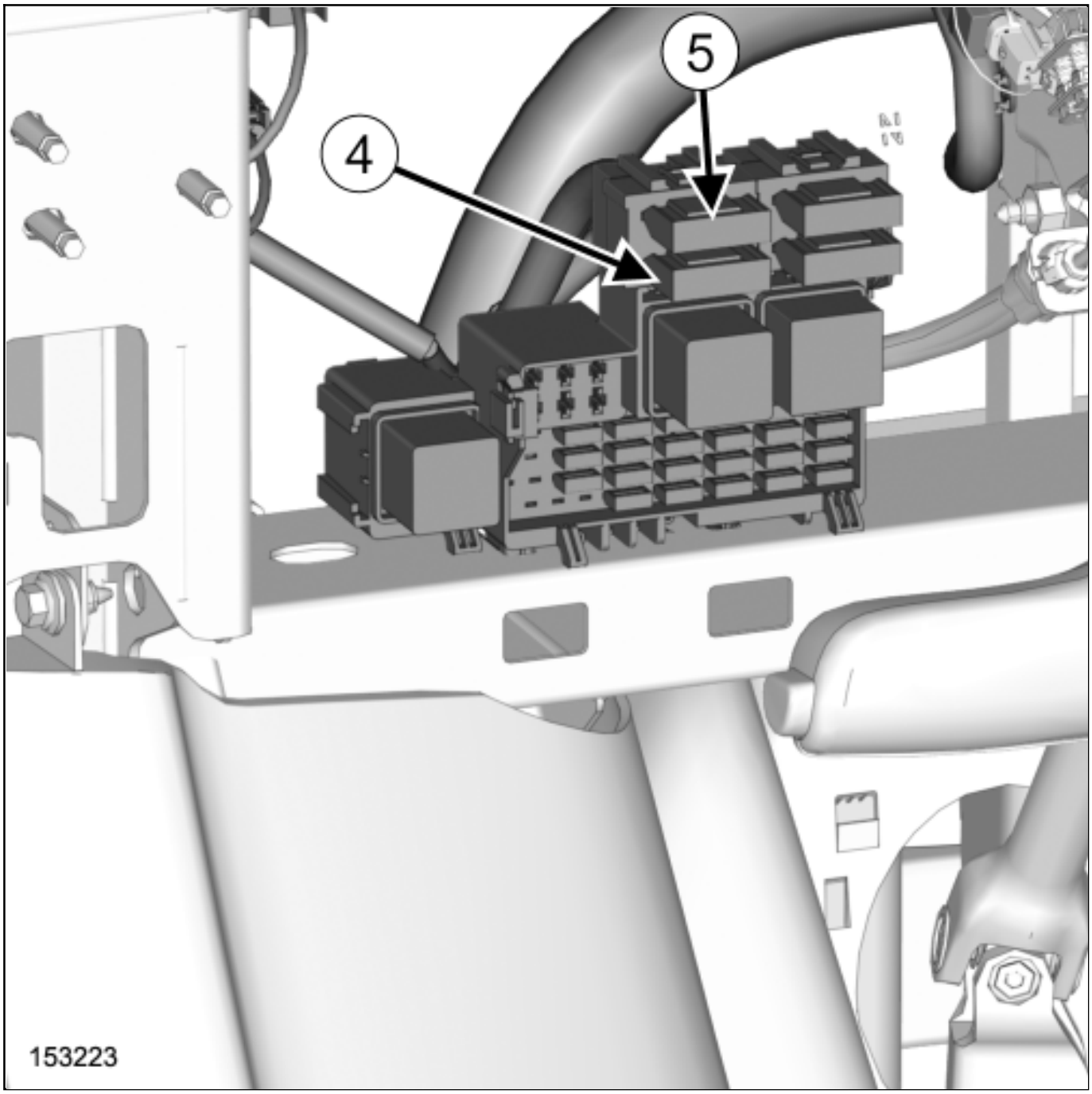

Remove:

- the fuses flap(see **Dashboard assembly: Exploded view**) ,
- the blue 60 Afuse (4) ,
- the red 50 Afuse (5) .

3- VEHICLE IN ELECTRICAL SAFETY MODESIGN

Position disconnection signs at the front and the rear of the vehicle.

Complete and place the "disconnection/connection" sheet at the front of the vehicle.

2. VEHICLE: CONNECTION

1- IDENTIFICATION OF THE VEHICLE

Check the vehicle's identification (registration, VIN) based on the repair order.

Check that the work requiring the disconnection has been completed and that electrical and other risks have been analyzed.

Remove all personal metal objects (jewellery, chains, wedding ring, watch, etc.).

Remove the vehicle keys.

Place the vehicle keys outside the vehicle.

Mark out the work area using Demarcation kit (posts, red and white chains, A4 mounting).

Make sure that no work is in progress.

Evacuate the work area.

Wear personal protective equipment:

- Protective overalls (Mainly coton),
- Electrical class 00 or 0 safety footwear,
- Class 00 or 0 electrical insulating gloves,
- Face shield,
- Bump cap .

Note:

Check the gloves tightness.

2- CHECK THE VEHICLE AND RESTORE ITS CONFORMITY

Check the conformity of the vehicle after reassembly, visual inspection of connectors.

Remove the insulation on the disconnected connectors and sockets(see **Wiring: Precautions for the repair**) .

3- UNLOCKING OF POWER SOURCES

Remove:

- the toolSafety lockout plug padlock of the traction battery(**Ele. 1980**) from the "charger - traction battery" wiring,
- the toolSafety lockout plug padlock of the traction battery(**Ele. 1980**) from the "converter - traction battery" wiring.

4- RESTORE THE POWER SUPPLY

- Connect:
  - the "charger - traction battery" wiring connector on the traction battery,
  - the "converter - traction battery" wiring connector on the traction battery.
- Refit the "converter - traction battery" wiring support nut.
- Torque tighten the "converter - traction battery" wiring support nut(see **Rear axle assembly: Exploded view**) .
- Remove personal protective equipment.
- Refit:
  - the blue 60 Afuse,
  - the red 50 Afuse,
  - the fuses flap(see **Dashboard assembly: Exploded view**) .
- Insert the vehicle keys.
- Switch on the vehicle (APC).

Check:

- that no faults are indicated on the instrument panel,
- that there are no faults with the Diagnostic tool,
- that it is possible to start the vehicle without fault.

Refit the engine undertray.

5- REMOVE THEVEHICLE IN ELECTRICAL SAFETY MODESIGN

Remove the "disconnection/connection" sheet from the front of the vehicle.

Complete the "disconnection/connection" sheet.

Remove:

- the disconnection signs from the front and rear of the vehicle,
- the marked safety area equipment.

VEHICLE TRIM : REMOVAL - REFITTING

Note, one or more warnings are present in this procedure

Equipment required
Diagnostic tool

WARNING

- To avoid all risk of damage to the systems, apply the safety and cleanliness instructions and operation recommendations before carrying out any repair:
  - Vehicle: Precautions for the repair .

- Location and specifications (tightening torques, parts always to be replaced, etc.):
  - (see 55A, Exterior protection, Exterior body front trim assembly: Exploded view) ,
  - Exterior body side trim assembly: Exploded view ,
  - (see 55A, Exterior protection, Exterior body rear trim assembly: Exploded view) ,
  - Interior body side trim assembly: Exploded view ,
  - Roof trim assembly: Exploded view ,
  - Floor trim assembly: Exploded view .

REMOVAL

1. FRONT BUMPER UPPER STRIP

1- REMOVAL OPERATION

-

Unclip the front bumper upper strip(see 55A, Exterior protection, Exterior body front trim assembly: Exploded view) .

2- IN THE EVENT OF REPLACEMENT

❑

Unclip the upper radiator grille(see 55A, Exterior protection, Exterior body front trim assembly: Exploded view) .

2. UPPER RADIATOR GRILLE

1- REMOVAL OPERATION

❑

Unclip the upper radiator grille(see 55A, Exterior protection, Exterior body front trim assembly: Exploded view) .

2- IN THE EVENT OF REPLACEMENT

❑

Unclip the front badge(see 55A, Exterior protection, Exterior body front trim assembly: Exploded view) .

3. FRONT BUMPER LOWER TRIM

1- REMOVAL PREPARATION OPERATION

❑

Position the vehicle on a two post liftVehicle: Towing and lifting .

2- REMOVAL OPERATION

❑

Remove (see 55A, Exterior protection, Exterior body front trim assembly: Exploded view) :

- the front bumper lower trim screws,
- the front bumper lower trim.

4. FRONT BUMPER TRIM

1- REMOVAL PREPARATION OPERATION

- Position the vehicle on a two post lift Vehicle: Towing and lifting .

- Remove the door mirrors Door mirror: Removal - Refitting .

- Remove the front bumper upper strip (see 55A, Exterior protection, Exterior body front trim assembly: Exploded view) .

- Remove the A-pillar trims Exterior body side trim assembly: Exploded view .

- Remove the front bumper lower trim (see 55A, Exterior protection, Exterior body front trim assembly: Exploded view) .

2- REMOVAL OPERATION

- Remove the front bumper trim screws (see 55A, Exterior protection, Exterior body front trim assembly: Exploded view) .

- Disconnect the direction indicator light supply connectors.

- Remove the front bumper trim (see 55A, Exterior protection, Exterior body front trim assembly: Exploded view) .

3- IN THE EVENT OF REPLACEMENT

-

Remove:

- the indicator lights Front signals - lighting assembly: Exploded view ,
- the traction battery charging plug flap (see 55A, Exterior protection, Exterior body front trim assembly: Exploded view) .

5. FRONT END PANEL

1- REMOVAL PREPARATION OPERATION

- Position the vehicle on a two post lift Vehicle: Towing and lifting .

- Remove the door mirrors Door mirror: Removal - Refitting .

- Remove the front bumper upper strip (see 55A, Exterior protection, Exterior body front trim assembly: Exploded view) .

- Remove the A-pillar trims Exterior body side trim assembly: Exploded view .

- Remove (see 55A, Exterior protection, Exterior body front trim assembly: Exploded view) :
  - the front bumper lower trim,
  - the front bumper trim.

- Drain the brake fluid reservoir using a syringe.

- Separate the clip of the hose between brake fluid reservoir and master cylinder on the brake fluid reservoir Braking control assembly: Exploded view .

CAUTION

Prepare for the flow of fluid, and protect the surrounding components.

- Remove the hose between brake fluid reservoir and master cylinder on the brake fluid reservoir Braking control assembly: Exploded view .

- Disconnect the windscreen washer hose, pump outlet Wipers/washing assembly : Exploded view .

2- REMOVAL OPERATION

- Remove the front end panel nuts and screws (see 55A, Exterior protection, Exterior body front trim assembly: Exploded view) .

- Move aside the front end panel.

- Disconnect the headlight connectors.

- Remove the front end panel (see 55A, Exterior protection, Exterior body front trim assembly: Exploded view) .

3- IN THE EVENT OF REPLACEMENT

- Remove the headlights Front signals - lighting assembly: Exploded view .

- Remove the brake fluid reservoir from the front end panel Braking control assembly: Exploded view .

1. A-PILLAR TRIM

1- REMOVAL PREPARATION OPERATION

- Remove the door mirrorDoor mirror: Removal - Refitting .

- Remove the front bumper upper strip(see 55A, Exterior protection, Exterior body front trim assembly: Exploded view) .

2- REMOVAL OPERATION

- Unclip the A-pillar trimExterior body side trim assembly: Exploded view .

2. B-PILLAR TRIM

1- REMOVAL OPERATION

- Unclip the B-pillar trimExterior body side trim assembly: Exploded view .

3. ROOF FRONT SECTION TRIM

1- REMOVAL PREPARATION OPERATION

- Remove the door mirrorDoor mirror: Removal - Refitting .

- Remove the front bumper upper strip(see 55A, Exterior protection, Exterior body front trim assembly: Exploded view) .

- Remove Exterior body side trim assembly: Exploded view :
  -

- the A-pillar trim,
- the B-pillar trim.

2- REMOVAL OPERATION

- Remove the roof front section trim screw Exterior body side trim assembly: Exploded view .
- Unclip the roof front section trim Exterior body side trim assembly: Exploded view .

4. BODY SIDE TRIM

1- REMOVAL PREPARATION OPERATION

- Remove the door mirror Door mirror: Removal - Refitting .
- Remove the front bumper upper strip (see 55A, Exterior protection, Exterior body front trim assembly: Exploded view) .
- Remove Exterior body side trim assembly: Exploded view :
  - the A-pillar trim,
  - the B-pillar trim.

2- REMOVAL OPERATION

- Remove the body side trim screws Exterior body side trim assembly: Exploded view .
- Unclip the body side trim Exterior body side trim assembly: Exploded view .

5. SILL PANEL EXTENSION

1- REMOVAL PREPARATION OPERATION

- Remove the door mirror Door mirror: Removal - Refitting .

- Remove the front bumper upper strip (see 55A, Exterior protection, Exterior body front trim assembly: Exploded view) .

- Remove Exterior body side trim assembly: Exploded view :
  - the A-pillar trim,
  - the B-pillar trim,
  - the body side trim.

2- REMOVAL OPERATION

- Remove the sill panel extension screws Exterior body side trim assembly: Exploded view .

- Unclip the sill panel extension Exterior body side trim assembly: Exploded view .

6. FRONT WHEEL ARCH LINER

1- REMOVAL PREPARATION OPERATION

- Position the vehicle on a two post lift Vehicle: Towing and lifting .

- Remove the door mirrorDoor mirror: Removal - Refitting .

- Remove the front bumper upper strip(see 55A, Exterior protection, Exterior body front trim assembly: Exploded view) .

- Remove Exterior body side trim assembly: Exploded view :
  - the A-pillar trim,
  - the B-pillar trim,
  - the body side trim,
  - the sill panel extension.

- Remove (see 55A, Exterior protection, Exterior body front trim assembly: Exploded view) :
  - the front bumper lower trim,
  - the front bumper trim.

- Remove the "front stub axle carrier - shock absorber" assemblyFront hub carrier assembly: Exploded view and Front axle assembly: Exploded view .

2- REMOVAL OPERATION

- Remove the front wheel arch liner screwsExterior body side trim assembly: Exploded view .

- Unclip the front wheel arch liner trimExterior body side trim assembly: Exploded view .

7. REAR WHEEL ARCH LINER

1- REMOVAL PREPARATION OPERATION

- Position the vehicle on a two post lift Vehicle: Towing and lifting .

- Remove the door mirror Door mirror: Removal - Refitting .

- Remove the front bumper upper strip (see 55A, Exterior protection, Exterior body front trim assembly: Exploded view) .

- Remove Exterior body side trim assembly: Exploded view :
  - the A-pillar trim,
  - the B-pillar trim,
  - the body side trim,
  - the sill panel extension.

- Remove the rear bumper trim (see 55A, Exterior protection, Exterior body rear trim assembly: Exploded view) .

2- REMOVAL OPERATION

- Remove the rear wheel arch liner screws Exterior body side trim assembly: Exploded view .

- Unclip the rear wheel arch liner Exterior body side trim assembly: Exploded view .

3- IN THE EVENT OF REPLACEMENT

- Remove the direction indicator lights Rear signals - lighting assembly: Exploded view .

8. WINDSCREEN SIDE WINDOW

1- REMOVAL PREPARATION OPERATION

- Remove the door mirror Door mirror: Removal - Refitting .

- Remove the front bumper upper strip (see 55A, Exterior protection, Exterior body front trim assembly: Exploded view) .

- Remove Exterior body side trim assembly: Exploded view :
  - the A-pillar trim,
  - the B-pillar trim,
  - the roof front section trim.

2- REMOVAL OPERATION

- Remove Exterior body side trim assembly: Exploded view :
  - the windscreen side window screws,
  - the windscreen side window.

REMOVAL

1. REAR BUMPER TRIM

1- REMOVAL PREPARATION OPERATION

- Position the vehicle on a two post lift Vehicle: Towing and lifting .
- Remove the number plate lights Rear signals - lighting assembly: Exploded view .

2- REMOVAL OPERATION

- Remove (see 55A, Exterior protection, Exterior body rear trim assembly: Exploded view) :
  - the rear bumper trim screws,
  - the rear bumper trim.

3- IN THE EVENT OF REPLACEMENT

- Unclip the reflectors Rear signals - lighting assembly: Exploded view .

2. ROOF REAR SECTION

1- REMOVAL PREPARATION OPERATION

- Remove the B-pillar trims Exterior body side trim assembly: Exploded view .

2- REMOVAL OPERATION

- Remove (see 55A, Exterior protection, Exterior body rear trim assembly: Exploded view) :
  - the roof rear section screws,
  - the roof rear section.

3. REAR BUMPER UPPER STRIP TRIM

1- REMOVAL PREPARATION OPERATION

- Position the vehicle on a two post lift Vehicle: Towing and lifting .

- Remove:
  - the rear bumper trim (see 55A, Exterior protection, Exterior body rear trim assembly: Exploded view) ,
  - the B-pillar trims Exterior body side trim assembly: Exploded view ,
  - the roof rear section (see 55A, Exterior protection, Exterior body rear trim assembly: Exploded view) ,
  - the centre light Rear signals - lighting assembly: Exploded view .

2- REMOVAL OPERATION

- Remove (see 55A, Exterior protection, Exterior body rear trim assembly: Exploded view) :
  - the rear bumper upper strip trim screws,
  - the rear bumper upper strip trim.

3- IN THE EVENT OF REPLACEMENT

- Unclip the rear badge.

REMOVAL

1. REAR HEADLINING

1- REMOVAL PREPARATION OPERATION

Remove:

- the B-pillar trimsExterior body side trim assembly: Exploded view ,
- the cover of the driver seat belt upper bolt,
- the driver seat belt upper bolt,
- the cover of the passenger seat belt upper bolt,
- the passenger seat belt upper bolt,
- the rear seatback trim.

2- REMOVAL OPERATION

Remove the rear headlining screwsInterior body side trim assembly: Exploded view .

Unclip the rear headliningInterior body side trim assembly: Exploded view .

3- IN THE EVENT OF REPLACEMENT

Remove the rear seat headrestRear seat headrest: Removal - Refitting .

2. REAR SIDE PANEL TRIM

1- REMOVAL PREPARATION OPERATION

Remove:

- the B-pillar trimsExterior body side trim assembly: Exploded view ,
- the rear seatback trim,
- the rear headliningInterior body side trim assembly: Exploded view .

2- REMOVAL OPERATION

- Remove the screws of the rear side panel trimInterior body side trim assembly: Exploded view .
- Unclip the rear side panel trimInterior body side trim assembly: Exploded view .

3. REAR CENTRE PANEL LINING

1- REMOVAL PREPARATION OPERATION

- Remove:
  - the B-pillar trimsExterior body side trim assembly: Exploded view ,
  - the rear headliningInterior body side trim assembly: Exploded view ,
  - the rear side panel trimsInterior body side trim assembly: Exploded view ,

2- REMOVAL OPERATION

- Remove Interior body side trim assembly: Exploded view :
  - the rear centre panel lining screws,
  - the rear centre panel lining.

REMOVAL

1. ROOF REAR CROSS MEMBER TRIM

1- REMOVAL OPERATION

- Remove the roof rear cross member trim screws Roof trim assembly: Exploded view .
- Unclip the roof rear cross member trim Roof trim assembly: Exploded view .

2. ROOF FRONT CROSS MEMBER TRIM

1- REMOVAL PREPARATION OPERATION

- Remove the door mirror Door mirror: Removal - Refitting .
- Remove the front bumper upper strip (see 55A, Exterior protection, Exterior body front trim assembly: Exploded view) .
- Remove Exterior body side trim assembly: Exploded view :
  - the A-pillar trim,
  - the B-pillar trim,
  - the roof front section trims.
- Remove the roof rear cross member trim Roof trim assembly: Exploded view .

2- REMOVAL OPERATION

- Remove the roof front cross member trim screwsRoof trim assembly: Exploded view .

- Unclip the roof front cross member trimRoof trim assembly: Exploded view .

3. WINDSCREEN PILLAR TRIM

1- REMOVAL PREPARATION OPERATION

WARNING

To avoid any risk of triggering when working on or near a pyrotechnic component (airbags or pretensioners), lock the airbag computer using the diagnostic tool.

When this function is activated, all the trigger lines are inhibited and the airbag warning light on the instrument panel lights up continuously (ignition on).

- Lock the airbag computer using the Diagnostic tool(see Fault finding - Replacement of components) (88C, Airbags and pretensioners).

WARNING

DANGER : Risk of serious injuries due to the short-circuiting or the untimely triggering of an electrical system (pyrotechnical parts, windscreen wiper motor, electric fan, etc.) following possible loopback of the 12-volt supply circuit by the voltage transformer.

Please adhere to the instructions regarding cut-off of the 12-volt supply circuit.

If the procedure fails, do not continue with your task and ask an employee who is qualified and authorized to work on a high-voltage onboard network to perform a diagnostic Vehicle: Precautions for the repair .

- Lockout the 12V supply circuit12 V supply circuit : Lockout - Removal of lockout .

- Remove the door mirrors Door mirror: Removal - Refitting .

- Remove the front bumper upper strip (see 55A, Exterior protection, Exterior body front trim assembly: Exploded view) .

- Remove Exterior body side trim assembly: Exploded view :
  - the A-pillar trims,
  - the B-pillar trims,
  - the roof front section trims,
  - the winscreen side windows.

- Remove the dashboard Dashboard assembly: Exploded view .

2- REMOVAL OPERATION

- Remove the windscreen pillar trim screws Roof trim assembly: Exploded view .

- Unclip the windscreen pillar trim Roof trim assembly: Exploded view .

REMOVAL

1. FRONT FLOOR

1- REMOVAL PREPARATION OPERATION

-

Remove the front floor carpet.

2- REMOVAL OPERATION

- Unclip the front floor Floor trim assembly: Exploded view .

2. CENTRE FLOOR

1- REMOVAL PREPARATION OPERATION

- Remove the door mirrors Door mirror: Removal - Refitting .

- Remove the front bumper upper strip (see 55A, Exterior protection, Exterior body front trim assembly: Exploded view) .

- Remove Exterior body side trim assembly: Exploded view :
  - the A-pillar trims,
  - the B-pillar trims,
  - the body side trims.

- Remove:
  - the rear headlining Interior body side trim assembly: Exploded view ,
  - the rear side panel trims Interior body side trim assembly: Exploded view ,
  - the front seat Front seat assembly: Exploded view ,

- the rear seat,
- the front floor carpet.

2- REMOVAL OPERATION

- Unclip the compartment centre floor carpets clips Floor trim assembly: Exploded view .
- Remove Floor trim assembly: Exploded view :
  - the centre floor clips,
  - the centre floor rear screws.
- Remove the centre floor Floor trim assembly: Exploded view .

3. BULKHEAD

1- REMOVAL PREPARATION OPERATION

WARNING

To avoid any risk of triggering when working on or near a pyrotechnic component (airbags or pretensioners), lock the airbag computer using the diagnostic tool.

When this function is activated, all the trigger lines are inhibited and the airbag warning light on the instrument panel lights up continuously (ignition on).

- Lock the airbag computer using the Diagnostic tool(see Fault finding - Replacement of components) (88C, Airbags and pretensioners).

WARNING

DANGER : Risk of serious injuries due to the short-circuiting or the untimely triggering of an electrical system (pyrotechnical parts, windscreen wiper motor, electric fan, etc.) following possible loopback of the 12-volt supply circuit by the voltage transformer.

Please adhere to the instructions regarding cut-off of the 12-volt supply circuit.

If the procedure fails, do not continue with your task and ask an employee who is qualified and authorized to work on a high-voltage onboard network to perform a diagnostic Vehicle: Precautions for the repair .

- Lockout the 12V supply circuit12 V supply circuit : Lockout - Removal of lockout .

- Remove the door mirrorsDoor mirror: Removal - Refitting .

- Remove the front bumper upper strip(see 55A, Exterior protection, Exterior body front trim assembly: Exploded view) .

- Remove Exterior body side trim assembly: Exploded view :
  - the A-pillar trims,
  - the B-pillar trims,
  - the body side trims,
  - the winscreen side windows.

- Remove the dashboardDashboard assembly: Exploded view .

Remove:

- the front seat Front seat assembly: Exploded view ,
- the front floor carpet,
- the centre floor Floor trim assembly: Exploded view ,
- the universal joint bolt and nut of the steering column Steering assembly: Exploded view ,
- the pedal assembly Pedal assembly: Exploded view .

2- REMOVAL OPERATION

Remove Floor trim assembly: Exploded view :

- the bulkhead screws,
- the bulkhead.

REFITTING

1. REFITTING OPERATION

Proceed in the reverse order to removal.

2. FINAL OPERATION

Bleed the brake circuit if necessary Braking circuit: Bleed .

Connect the 12V supply circuit if disconnected for the removal 12 V supply circuit : Lockout - Removal of lockout .

- Unlock the airbag computer using the Diagnostic tool(see Fault finding - Replacement of components) (88C, Airbags and pretensioners) if locked for the removal.

- Carry out a function test on all functions.

Repair-50x07x35-01x37-1-1-1.xml

XSL version : 3.02 du 22/07/11

VEHICLE TRIM : REMOVAL - REFITTING

Note, one or more warnings are present in this procedure

Equipment required
Diagnostic tool

WARNING

- To avoid all risk of damage to the systems, apply the safety and cleanliness instructions and operation recommendations before carrying out any repair:
  - Vehicle: Precautions for the repair .

- Location and specifications (tightening torques, parts always to be replaced, etc.):
  - (see 55A, Exterior protection, Exterior body front trim assembly: Exploded view) ,
  - Exterior body side trim assembly: Exploded view ,
  - (see 55A, Exterior protection, Exterior body rear trim assembly: Exploded view) ,
  - Interior body side trim assembly: Exploded view ,
  - Roof trim assembly: Exploded view ,
  - Floor trim assembly: Exploded view .

REMOVAL

1. FRONT BUMPER UPPER STRIP

1- REMOVAL OPERATION

- Unclip the front bumper upper strip(see 55A, Exterior protection, Exterior body front trim assembly: Exploded view) .

2- IN THE EVENT OF REPLACEMENT

- Unclip the upper radiator grille(see 55A, Exterior protection, Exterior body front trim assembly: Exploded view) .

2. UPPER RADIATOR GRILLE

1- REMOVAL OPERATION

❑ Unclip the upper radiator grille(see 55A, Exterior protection, Exterior body front trim assembly: Exploded view) .

2- IN THE EVENT OF REPLACEMENT

❑ Unclip the front badge(see 55A, Exterior protection, Exterior body front trim assembly: Exploded view) .

3. FRONT BUMPER LOWER TRIM

1- REMOVAL PREPARATION OPERATION

❑ Position the vehicle on a two post liftVehicle: Towing and lifting .

2- REMOVAL OPERATION

❑ Remove (see 55A, Exterior protection, Exterior body front trim assembly: Exploded view) :

- the front bumper lower trim screws,
- the front bumper lower trim.

4. FRONT BUMPER TRIM

1- REMOVAL PREPARATION OPERATION

❑ Position the vehicle on a two post liftVehicle: Towing and lifting .

❑ Remove the front bumper upper strip(see 55A, Exterior protection, Exterior body front trim assembly: Exploded view) .

❑ Remove the A-pillar trimsExterior body side trim assembly: Exploded view .

❑ Remove the front bumper lower trim(see 55A, Exterior protection, Exterior body front trim assembly: Exploded view) .

2- REMOVAL OPERATION

❑ Remove the front bumper trim screws(see 55A, Exterior protection, Exterior body front trim assembly: Exploded view) .

❑ Disconnect the direction indicator light supply connectors.

❑ Remove the front bumper trim(see 55A, Exterior protection, Exterior body front trim assembly: Exploded view) .

3- IN THE EVENT OF REPLACEMENT

❑ Remove:

- the indicator lights Front signals - lighting assembly: Exploded view ,
- the traction battery charging plug flap (see 55A, Exterior protection, Exterior body front trim assembly: Exploded view) .

5. FRONT END PANEL

1- REMOVAL PREPARATION OPERATION

❑ Position the vehicle on a two post lift Vehicle: Towing and lifting .

❑ Remove the front bumper upper strip (see 55A, Exterior protection, Exterior body front trim assembly: Exploded view) .

❑ Remove the A-pillar trims Exterior body side trim assembly: Exploded view .

❑ Remove (see 55A, Exterior protection, Exterior body front trim assembly: Exploded view) :

- the front bumper lower trim,
- the front bumper trim.

❑ Drain the brake fluid reservoir using a syringe.

❑ Separate the clip of the hose between brake fluid reservoir and master cylinder on the brake fluid reservoir Braking control assembly: Exploded view .

CAUTION

Prepare for the flow of fluid, and protect the surrounding components.

❑ Remove the hose between brake fluid reservoir and master cylinder on the brake fluid reservoir Braking control assembly: Exploded view .

❑ Disconnect the windscreen washer hose, pump outlet Wipers/washing assembly : Exploded view .

2- REMOVAL OPERATION

❑ Remove the front end panel nuts and screws (see 55A, Exterior protection, Exterior body front trim assembly: Exploded view) .

- Move aside the front end panel.
- Disconnect the headlight connectors.
- Remove the front end panel(see 55A, Exterior protection, Exterior body front trim assembly: Exploded view) .

3- IN THE EVENT OF REPLACEMENT

- Remove the headlightsFront signals - lighting assembly: Exploded view .
- Remove the brake fluid reservoir from the front end panelBraking control assembly: Exploded view .

1. A-PILLAR TRIM

1- REMOVAL PREPARATION OPERATION

- Remove the front bumper upper strip(see 55A, Exterior protection, Exterior body front trim assembly: Exploded view) .

2- REMOVAL OPERATION

- Unclip the A-pillar trimExterior body side trim assembly: Exploded view .

2. B-PILLAR TRIM

1- REMOVAL OPERATION

- Unclip the B-pillar trimExterior body side trim assembly: Exploded view .

3. ROOF FRONT SECTION TRIM

1- REMOVAL PREPARATION OPERATION

- Remove the front bumper upper strip(see 55A, Exterior protection, Exterior body front trim assembly: Exploded view) .

- Remove Exterior body side trim assembly: Exploded view :
  - the A-pillar trim,
  - the B-pillar trim.

2- REMOVAL OPERATION

- Remove the roof front section trim screwExterior body side trim assembly: Exploded view .

- Unclip the roof front section trimExterior body side trim assembly: Exploded view .

4. BODY SIDE TRIM

1- REMOVAL PREPARATION OPERATION

- Remove the front bumper upper strip(see 55A, Exterior protection, Exterior body front trim assembly: Exploded view) .

- Remove Exterior body side trim assembly: Exploded view :
  - the A-pillar trim,
  - the B-pillar trim.

2- REMOVAL OPERATION

- Remove the body side trim screwsExterior body side trim assembly: Exploded view .
- Unclip the body side trimExterior body side trim assembly: Exploded view .

5. SILL PANEL EXTENSION

1- REMOVAL PREPARATION OPERATION

- Remove the front bumper upper strip(see 55A, Exterior protection, Exterior body front trim assembly: Exploded view) .
- Remove Exterior body side trim assembly: Exploded view :
  - the A-pillar trim,
  - the B-pillar trim,
  - the body side trim.

2- REMOVAL OPERATION

- Remove the sill panel extension screwsExterior body side trim assembly: Exploded view .
- Unclip the sill panel extensionExterior body side trim assembly: Exploded view .

6. FRONT WHEEL ARCH LINER

1- REMOVAL PREPARATION OPERATION

- Position the vehicle on a two post liftVehicle: Towing and lifting .

- Remove the front bumper upper strip(see 55A, Exterior protection, Exterior body front trim assembly: Exploded view) .

- Remove Exterior body side trim assembly: Exploded view :
  - the A-pillar trim,
  - the B-pillar trim,
  - the body side trim,
  - the sill panel extension.

- Remove (see 55A, Exterior protection, Exterior body front trim assembly: Exploded view) :
  - the front bumper lower trim,
  - the front bumper trim.

- Remove the "front stub axle carrier - shock absorber" assemblyFront hub carrier assembly: Exploded view and Front axle assembly: Exploded view .

2- REMOVAL OPERATION

- Remove the front wheel arch liner screwsExterior body side trim assembly: Exploded view .

- Unclip the front wheel arch liner trimExterior body side trim assembly: Exploded view .

7. REAR WHEEL ARCH LINER

1- REMOVAL PREPARATION OPERATION

- Position the vehicle on a two post lift Vehicle: Towing and lifting .

- Remove the front bumper upper strip (see 55A, Exterior protection, Exterior body front trim assembly: Exploded view) .

- Remove Exterior body side trim assembly: Exploded view :
  - the A-pillar trim,
  - the B-pillar trim,
  - the body side trim,
  - the sill panel extension.

- Remove the rear bumper trim (see 55A, Exterior protection, Exterior body rear trim assembly: Exploded view) .

2- REMOVAL OPERATION

- Remove the rear wheel arch liner screws Exterior body side trim assembly: Exploded view .

- Unclip the rear wheel arch liner Exterior body side trim assembly: Exploded view .

3- IN THE EVENT OF REPLACEMENT

- Remove the direction indicator lights Rear signals - lighting assembly: Exploded view .

8. WINDSCREEN SIDE WINDOW

1- REMOVAL PREPARATION OPERATION

- Remove the front bumper upper strip(see 55A, Exterior protection, Exterior body front trim assembly: Exploded view) .

- Remove Exterior body side trim assembly: Exploded view :
  - the A-pillar trim,
  - the B-pillar trim,
  - the roof front section trim.

2- REMOVAL OPERATION

- Remove Exterior body side trim assembly: Exploded view :
  - the windscreen side window screws,
  - the windscreen side window.

REMOVAL

1. REAR BUMPER TRIM

1- REMOVAL PREPARATION OPERATION

- Position the vehicle on a two post lifVehicle: Towing and lifting .

- Remove the number plate lightsRear signals - lighting assembly: Exploded view .

2- REMOVAL OPERATION

❑

Remove (see 55A, Exterior protection, Exterior body rear trim assembly: Exploded view) :

- the rear bumper trim screws,
- the rear bumper trim.

3- IN THE EVENT OF REPLACEMENT

❑

Unclip the reflectorsRear signals - lighting assembly: Exploded view .

2. ROOF REAR SECTION

1- REMOVAL PREPARATION OPERATION

❑

Remove the B-pillar trimsExterior body side trim assembly: Exploded view .

2- REMOVAL OPERATION

❑

Remove (see 55A, Exterior protection, Exterior body rear trim assembly: Exploded view) :

- the roof rear section screws,
- the roof rear section.

3. REAR BUMPER UPPER STRIP TRIM

1- REMOVAL PREPARATION OPERATION

❑

Position the vehicle on a two post liftVehicle: Towing and lifting .

❑

Remove:

- the rear bumper trim (see 55A, Exterior protection, Exterior body rear trim assembly: Exploded view) ,
- the B-pillar trims Exterior body side trim assembly: Exploded view ,
- the roof rear section (see 55A, Exterior protection, Exterior body rear trim assembly: Exploded view) ,
- the centre light Rear signals - lighting assembly: Exploded view .

2- REMOVAL OPERATION

Remove (see 55A, Exterior protection, Exterior body rear trim assembly: Exploded view) :

- the rear bumper upper strip trim screws,
- the rear bumper upper strip trim.

3- IN THE EVENT OF REPLACEMENT

Unclip the rear badge.

REMOVAL

1. REAR HEADLINING

1- REMOVAL PREPARATION OPERATION

Remove:

- the B-pillar trims Exterior body side trim assembly: Exploded view ,
- the cover of the driver seat belt upper bolt,
- the driver seat belt upper bolt,

- the cover of the passenger seat belt upper bolt,
- the passenger seat belt upper bolt,
- the rear seatback trim.

2- REMOVAL OPERATION

- Remove the rear headlining screws Interior body side trim assembly: Exploded view .
- Unclip the rear headlining Interior body side trim assembly: Exploded view .

3- IN THE EVENT OF REPLACEMENT

- Remove the rear seat headrest Rear seat headrest: Removal - Refitting .

2. REAR SIDE PANEL TRIM

1- REMOVAL PREPARATION OPERATION

- Remove:
  - the B-pillar trims Exterior body side trim assembly: Exploded view ,
  - the rear seatback trim,
  - the rear headlining Interior body side trim assembly: Exploded view .

2- REMOVAL OPERATION

- Remove the screws of the rear side panel trim Interior body side trim assembly: Exploded view .

- Unclip the rear side panel trim Interior body side trim assembly: Exploded view .

3. REAR CENTRE PANEL LINING

1- REMOVAL PREPARATION OPERATION

- Remove:
  - the B-pillar trims Exterior body side trim assembly: Exploded view ,
  - the rear headlining Interior body side trim assembly: Exploded view ,
  - the rear side panel trims Interior body side trim assembly: Exploded view ,

2- REMOVAL OPERATION

- Remove Interior body side trim assembly: Exploded view :
  - the rear centre panel lining screws,
  - the rear centre panel lining.

REMOVAL

1. ROOF REAR CROSS MEMBER TRIM

1- REMOVAL OPERATION

- Remove the roof rear cross member trim screws Roof trim assembly: Exploded view .

Unclip the roof rear cross member trimRoof trim assembly: Exploded view .

2. ROOF FRONT CROSS MEMBER TRIM

1- REMOVAL PREPARATION OPERATION

- Remove the front bumper upper strip(see 55A, Exterior protection, Exterior body front trim assembly: Exploded view) .
- Remove Exterior body side trim assembly: Exploded view :
  - the A-pillar trim,
  - the B-pillar trim,
  - the roof front section trims.
- Remove the roof rear cross member trimRoof trim assembly: Exploded view .

2- REMOVAL OPERATION

- Remove the roof front cross member trim screwsRoof trim assembly: Exploded view .
- Unclip the roof front cross member trimRoof trim assembly: Exploded view .

3. WINDSCREEN PILLAR TRIM

1- REMOVAL PREPARATION OPERATION

WARNING

To avoid any risk of triggering when working on or near a pyrotechnic component (airbags or pretensioners), lock the airbag computer using the diagnostic tool.

When this function is activated, all the trigger lines are inhibited and the airbag warning light on the instrument panel lights up continuously (ignition on).

Lock the airbag computer using the Diagnostic tool(see Fault finding - Replacement of components) (88C, Airbags and pretensioners).

WARNING

DANGER : Risk of serious injuries due to the short-circuiting or the untimely triggering of an electrical system (pyrotechnical parts, windscreen wiper motor, electric fan, etc.) following possible loopback of the 12-volt supply circuit by the voltage transformer.

Please adhere to the instructions regarding cut-off of the 12-volt supply circuit.

If the procedure fails, do not continue with your task and ask an employee who is qualified and authorized to work on a high-voltage onboard network to perform a diagnostic Vehicle: Precautions for the repair .

Lockout the 12V supply circuit12 V supply circuit : Lockout - Removal of lockout .

Remove the front bumper upper strip(see 55A, Exterior protection, Exterior body front trim assembly: Exploded view) .

Remove Exterior body side trim assembly: Exploded view :

- the A-pillar trims,
- the B-pillar trims,

- the roof front section trims,
- the winscreen side windows.

❑

Remove the dashboardDashboard assembly: Exploded view .

2- REMOVAL OPERATION

❑

Remove the windscreen pillar trim screwsRoof trim assembly: Exploded view .

❑

Unclip the windscreen pillar trimRoof trim assembly: Exploded view .

REMOVAL

1. FRONT FLOOR

1- REMOVAL PREPARATION OPERATION

❑

Remove the front floor carpet.

2- REMOVAL OPERATION

❑

Unclip the front floorFloor trim assembly: Exploded view .

2. CENTRE FLOOR

1- REMOVAL PREPARATION OPERATION

❑

Remove the front bumper upper strip(see 55A, Exterior protection, Exterior body front trim assembly: Exploded view) .

- Remove Exterior body side trim assembly: Exploded view :
  - the A-pillar trims,
  - the B-pillar trims,
  - the body side trims.
- Remove:
  - the rear headlining Interior body side trim assembly: Exploded view ,
  - the rear side panel trims Interior body side trim assembly: Exploded view ,
  - the front seat Front seat assembly: Exploded view ,
  - the rear seat,
  - the front floor carpet.

2- REMOVAL OPERATION

- Unclip the compartment centre floor carpets clips Floor trim assembly: Exploded view .
- Remove Floor trim assembly: Exploded view :
  - the centre floor clips,
  - the centre floor rear screws.
- Remove the centre floor Floor trim assembly: Exploded view .

1- REMOVAL PREPARATION OPERATION

WARNING

To avoid any risk of triggering when working on or near a pyrotechnic component (airbags or pretensioners), lock the airbag computer using the diagnostic tool.

When this function is activated, all the trigger lines are inhibited and the airbag warning light on the instrument panel lights up continuously (ignition on).

Lock the airbag computer using the Diagnostic tool(see Fault finding - Replacement of components) (88C, Airbags and pretensioners).

WARNING

DANGER : Risk of serious injuries due to the short-circuiting or the untimely triggering of an electrical system (pyrotechnical parts, windscreen wiper motor, electric fan, etc.) following possible loopback of the 12-volt supply circuit by the voltage transformer.

Please adhere to the instructions regarding cut-off of the 12-volt supply circuit.

If the procedure fails, do not continue with your task and ask an employee who is qualified and authorized to work on a high-voltage onboard network to perform a diagnostic Vehicle: Precautions for the repair .

Lockout the 12V supply circuit12 V supply circuit : Lockout - Removal of lockout .

Remove the front bumper upper strip(see 55A, Exterior protection, Exterior body front trim assembly: Exploded view) .

Remove Exterior body side trim assembly: Exploded view :

- the A-pillar trims,
- the B-pillar trims,
- the body side trims,
- the winscreen side windows.

- Remove the dashboard Dashboard assembly: Exploded view .

- Remove:
  - the front seat Front seat assembly: Exploded view ,
  - the front floor carpet,
  - the centre floor Floor trim assembly: Exploded view ,
  - the universal joint bolt and nut of the steering column Steering assembly: Exploded view ,
  - the pedal assembly Pedal assembly: Exploded view .

2- REMOVAL OPERATION

- Remove Floor trim assembly: Exploded view :
  - the bulkhead screws,
  - the bulkhead.

REFITTING

1. REFITTING OPERATION

❑

Proceed in the reverse order to removal.

2. FINAL OPERATION

❑

Bleed the brake circuit if necessary**Braking circuit: Bleed** .

❑

Connect the 12V supply circuit if disconnected for the removal**12 V supply circuit : Lockout - Removal of lockout** .

❑

Unlock the airbag computer using the Diagnostic tool(see Fault finding - Replacement of components) (88C, Airbags and pretensioners) if locked for the removal.

❑

Carry out a function test on all functions.

WHEEL ARCH LINER: REMOVAL - REFITTING

Note, one or more warnings are present in this procedure

WARNING

- To avoid all risk of damage to the systems, apply the safety and cleanliness instructions and operation recommendations before carrying out any repair:

Vehicle: Precautions for the repair .

REMOVAL

1. REMOVAL PREPARATION OPERATION

- Position the vehicle on a two post liftVehicle: Towing and lifting .

2. REMOVAL OPERATION

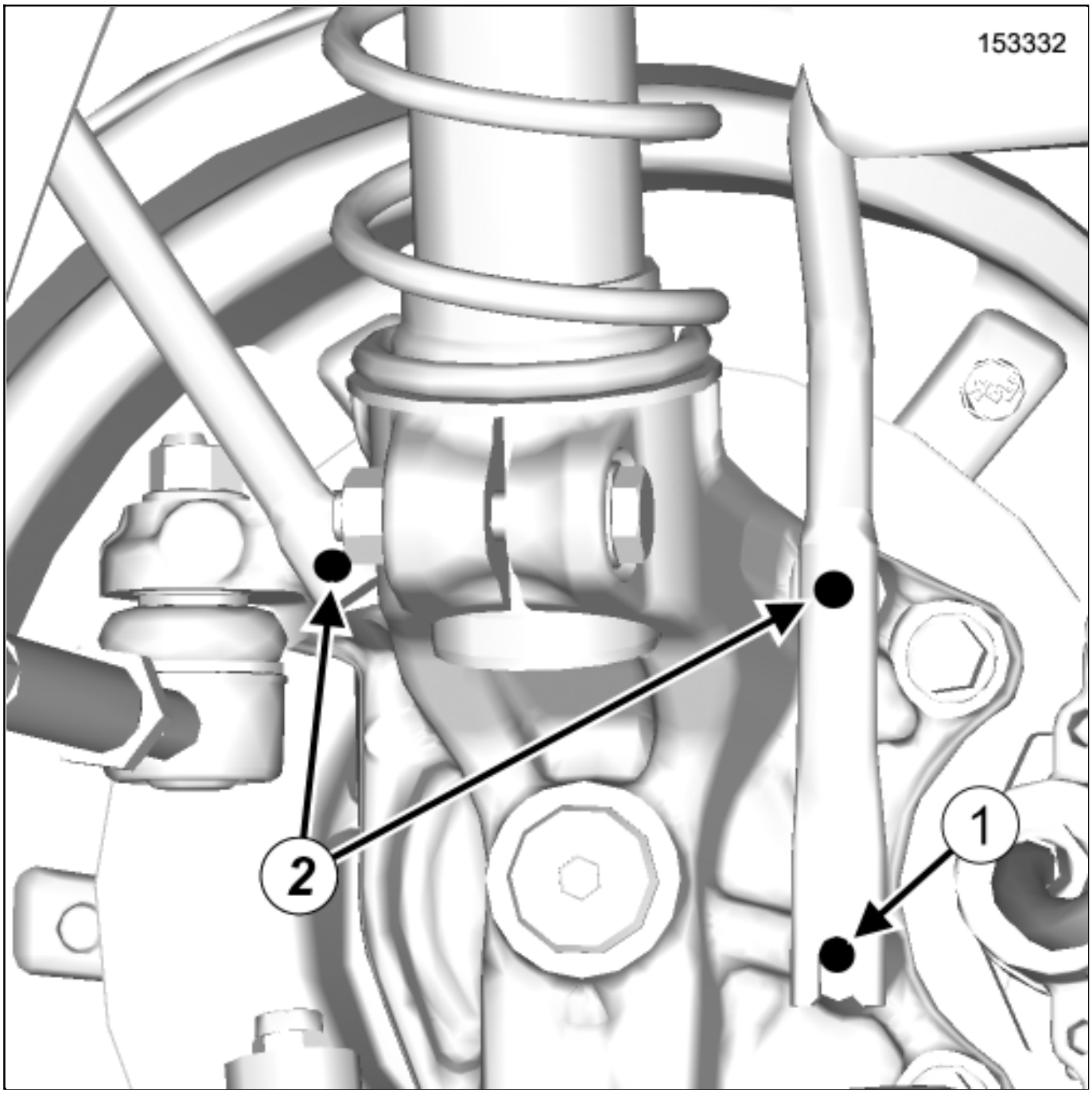

- Loosen the wheel arch liner screw(1) .
- Remove:
  - the wheel arch liner screws(2) ,
  - the wheel arch liner.

REFITTING

1. REFITTING PREPARATION OPERATION

Part always to be replaced: Wheel arch liner screws.

2. REFITTING OPERATION

Proceed in the reverse order to removal.

Repair-50x07x27-01x37-1-1-1.xml

XSL version : 3.02 du 22/07/11

WHEEL:BALANCING

Note, one or more warnings are present in this procedure

1. PREREQUISITES FOR WHEEL BALANCING

❑ Wheel balancing is a measurement operation.

Several conditions must be met to achieve a reliable result in a single operation.

The wheel balancer must be installed in accordance with the manufacturer's instructions.

It is essential to calibrate the balancer according to the frequency recommended by the manufacturer.

Do not grease the threaded shaft.

Check the condition of the supports, centring components and mountings.

Replace any faulty parts (see manufacturer's instructions).

The wheel and the wheel balancer must be clean.

1- DRIVER'S PERCEPTION

❑ If the wheels are not correctly balanced this causes the steering wheel and/or the vehicle floor to vibrate.

These vibrations appear between 54 mph (90 km/h)and 90 mph (150 km/h).

2. BALANCING PREPARATION OPERATION

❑ Adjust the tyre pressureTyre pressure: Identification .

❑ Always carry out a road test for a minimum distance of 1 mile (2 km)before balancing the wheels, in order to remove any flat spots on the tread caused by the vehicle being immobilised.

❑ Actions to be carried out immediately after the test drive:

- Position the vehicle on a two-post vehicle liftVehicle: Towing and lifting ,
- raise the vehicle,
- leave the four wheels hanging free,

release the parking brake.

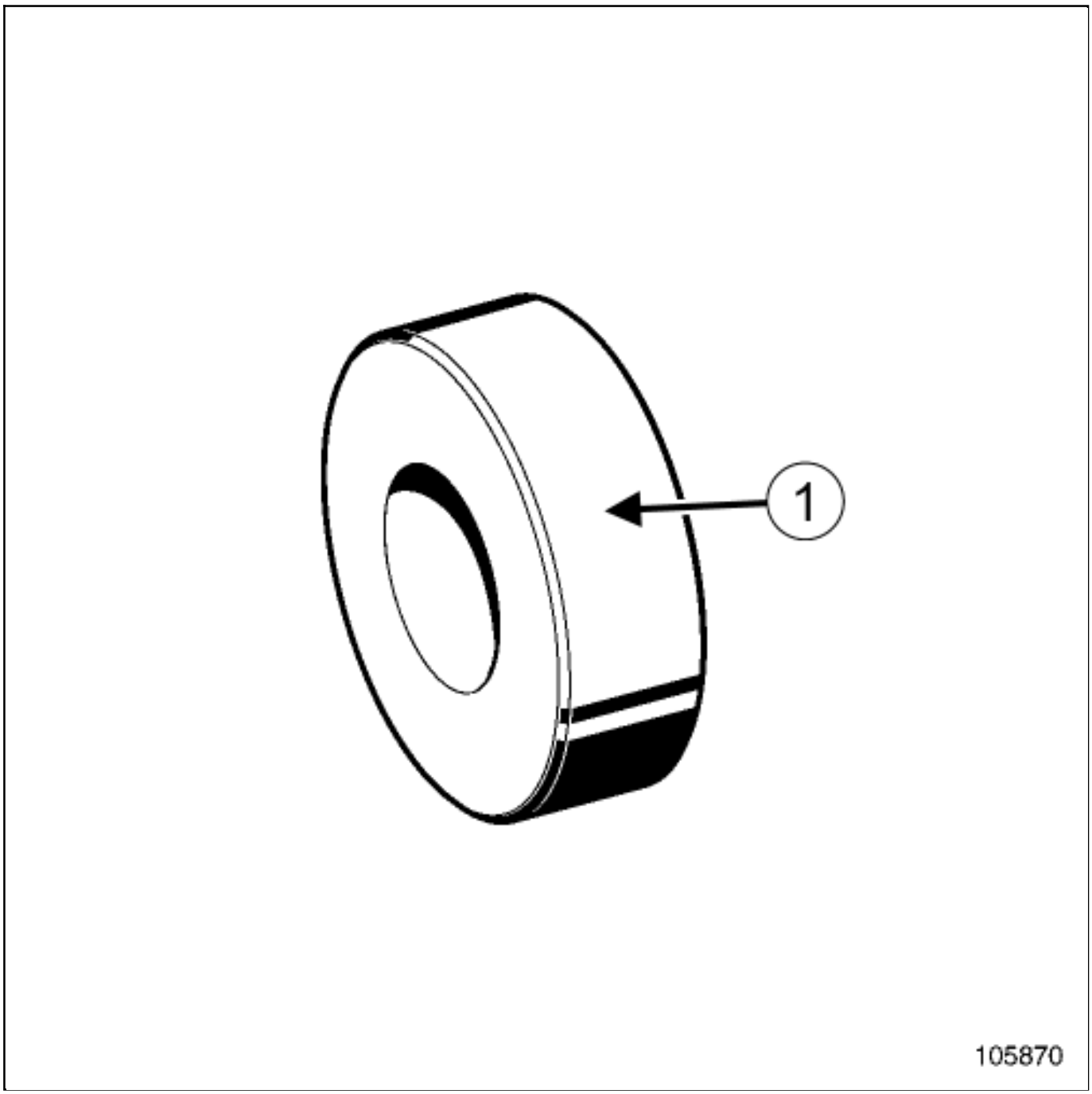

Note:

The ring is available from the supplier of the equipment used.

To reproduce the exact vehicle wheel assembly, use a ring(1) of diameter:

60 mm

There are three types of weight:

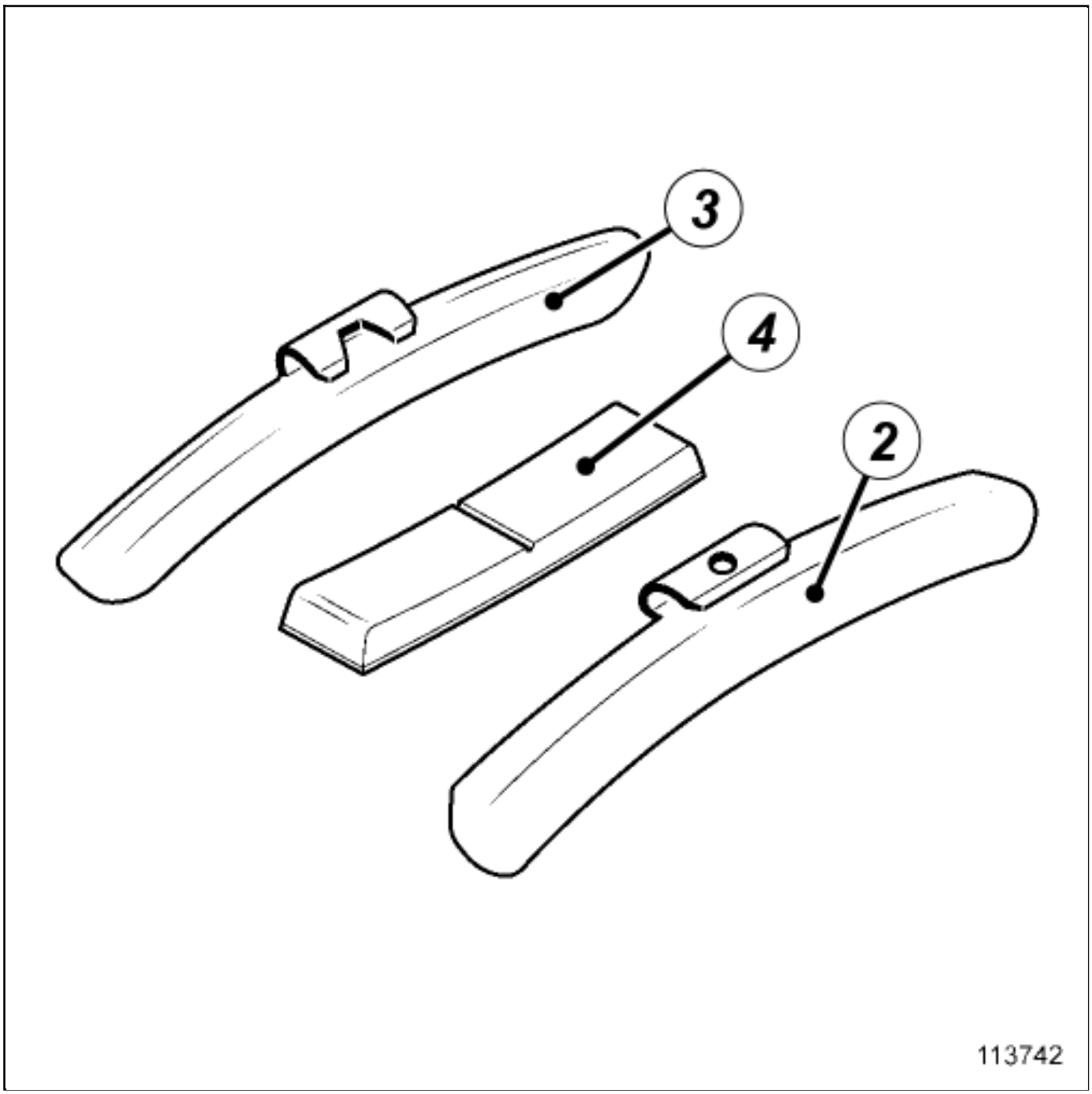

(2) Steel wheel with flange

(3) Alloy wheel with flange

(4) Alloy wheel without flange

❑

In some countries, the use of lead weights is forbidden; in this case it is recommended to use ZAMAK weights instead.

Only use weights provided by the Parts Department.

❑

Remove the wheels(see 35A, Wheels and tyres, Wheel: Removal - Refitting) .

❑

Always clean the wheel, disc, and hub bearing surfaces.

3. PROCEDURE FOR BALANCING THE WHEEL IN QUESTION

❑

Make sure that the wheel balancer bearing surface and all the centring equipment (ring, thrust plate, etc.) are kept clean.

❑

Try not to scratch the (alloy) wheel rim with the wheel tightening device.

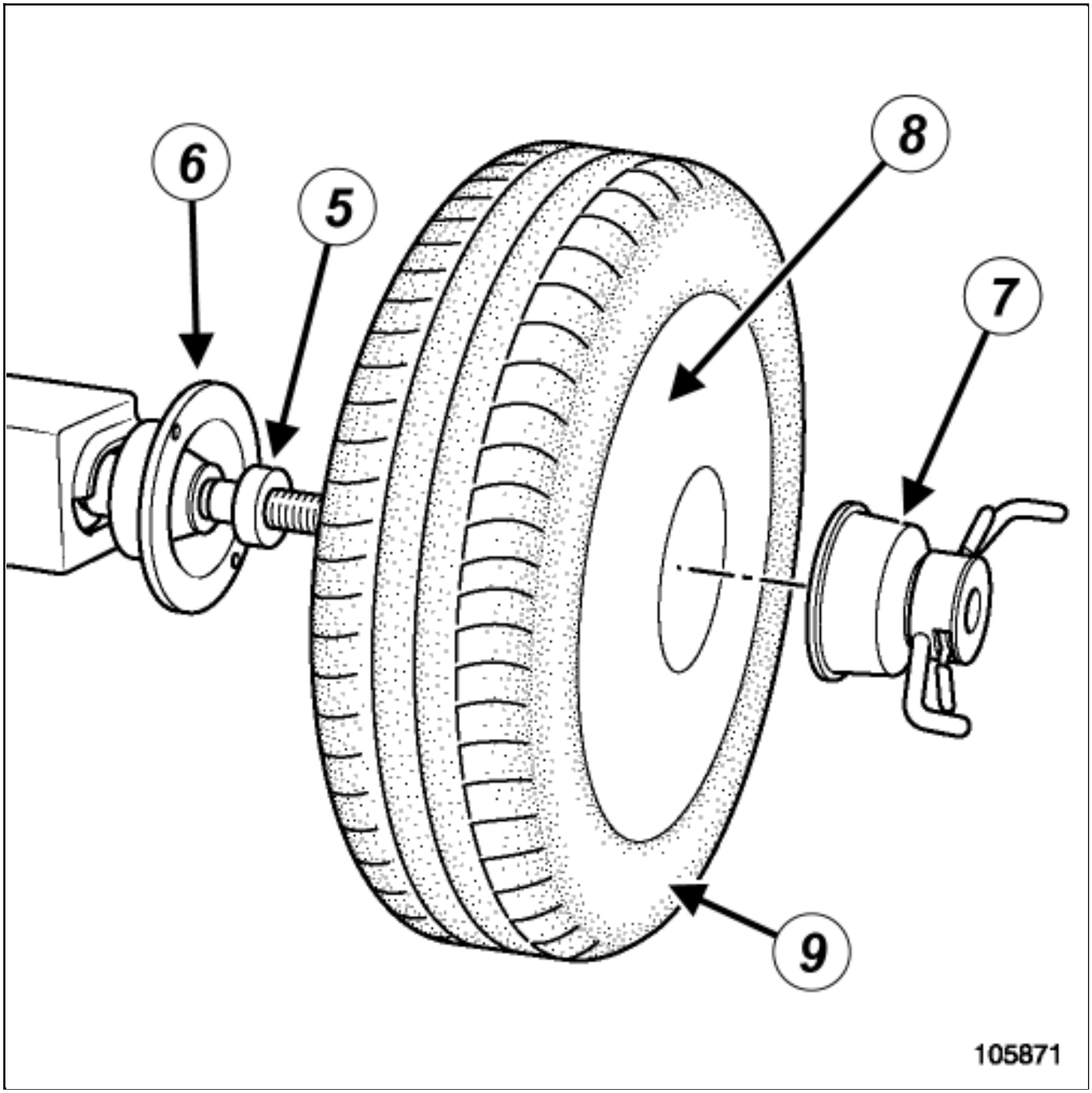

The wheel is fitted on the wheel balancer as follows:

- (5) ring,
- (6) wheel balancer back-plate,
- (7) wheel tightening device (certain alloy wheels require a device 200 mm in diameter to ensure that the wheel has been correctly tightened),
- (8) outer wheel plane,

(9) wheel.

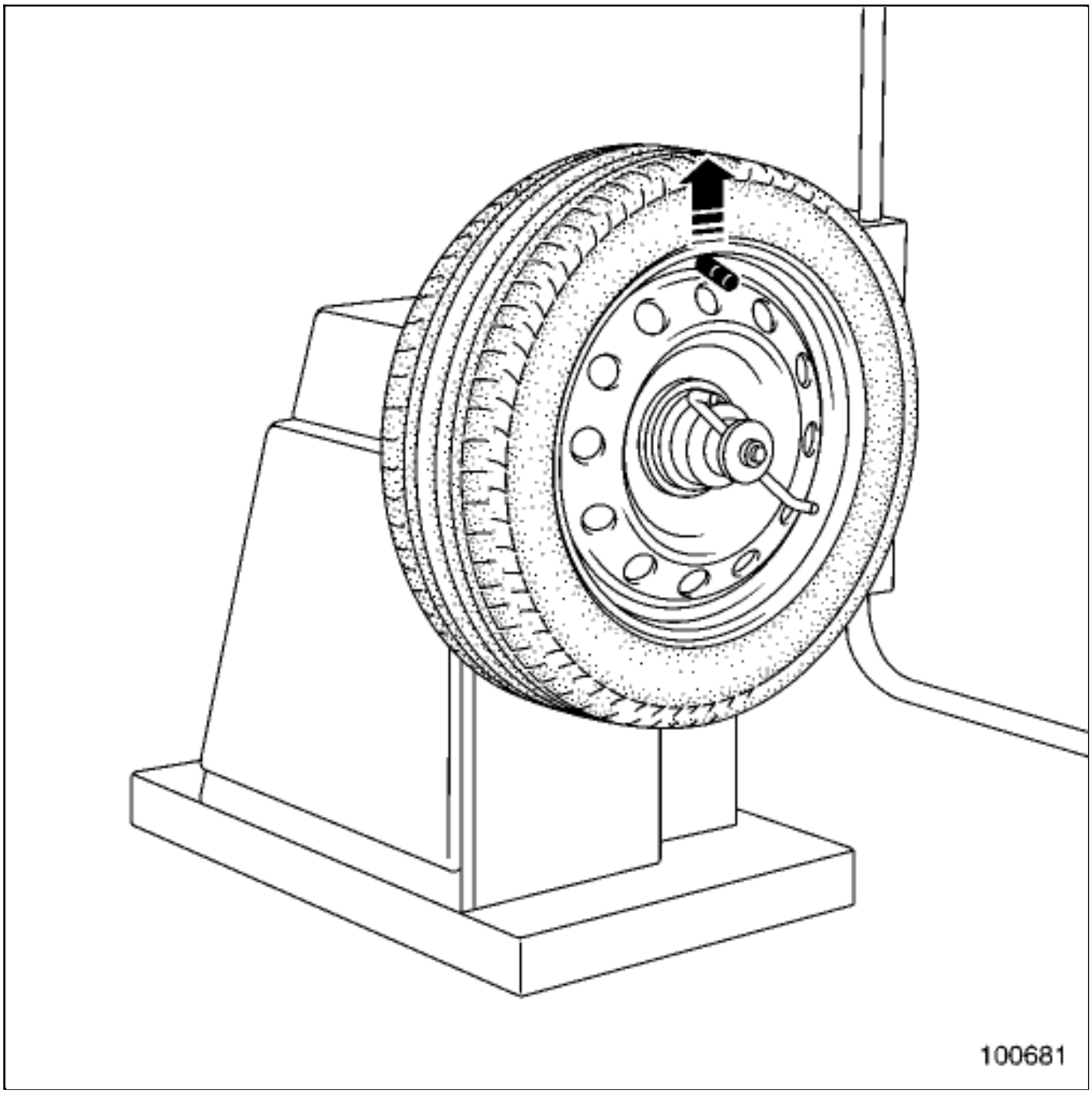

Place the wheel on the wheel balancer, with the valve at the top, then lock the wheel in place.

Remove any stones trapped in the tyre tread.

Enter the specific wheel parameters when starting the wheel balancer.

❑

Start the wheel balancer and check the wheel balance, which should be 0 gon each plane of the wheel.

❑

If this is not the case, remove the old wheel balancing weights and repeat the wheel balancing procedure, checking that the wheel balance equals 0on each wheel plane.

CAUTION

To avoid detachment of the balance weights, use only weights which correspond to the vehicle wheel rims.

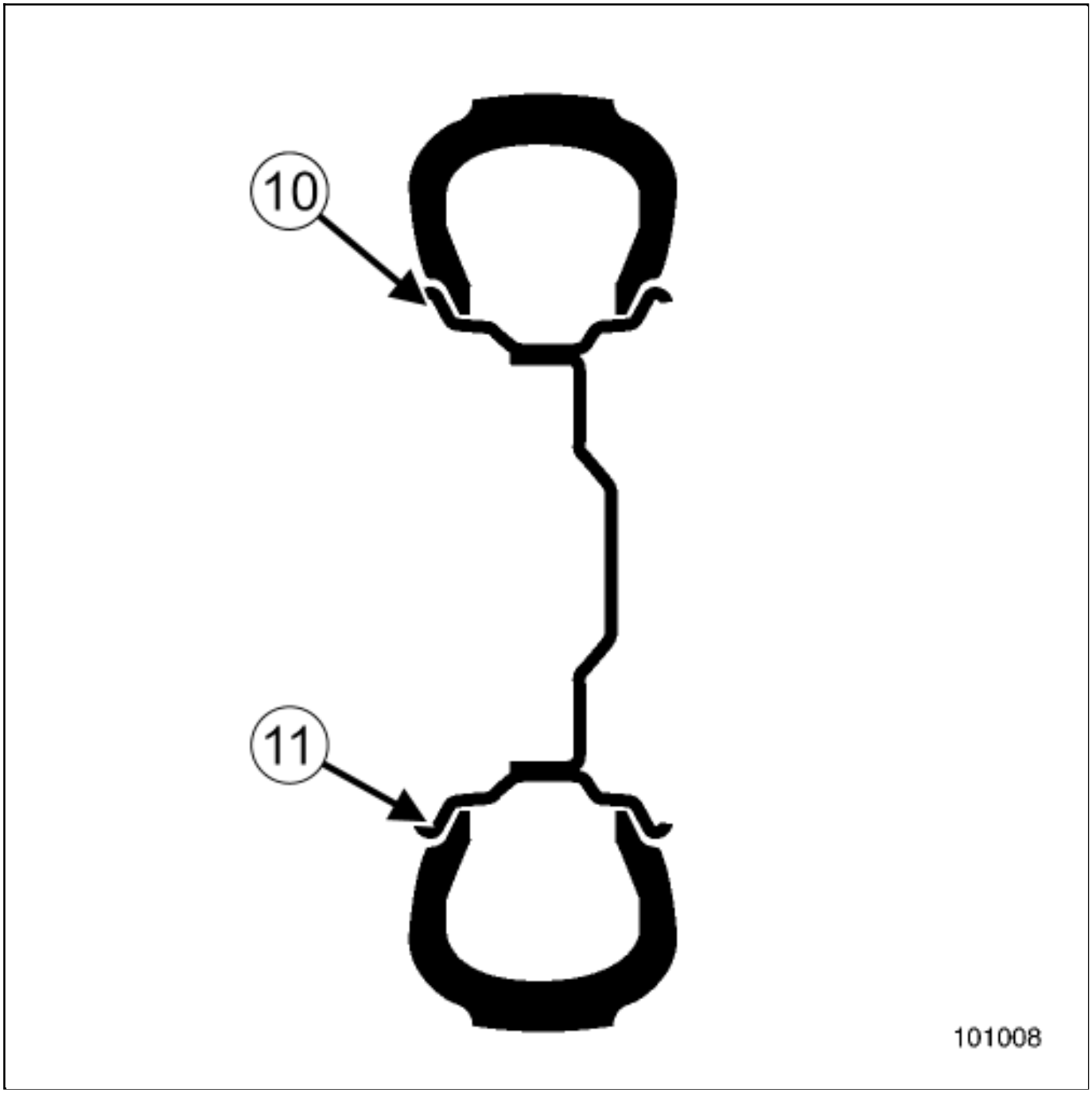

To ensure that the wheels are balanced correctly:

- Position a 10 g adhesive weight (10) on the interior of the wheel rim,
- Repeat the wheel balancing procedure; the wheel balancer should indicate an equivalent weight (± 4 g) opposite the weight added(11) ,
- Repeat the balancing method from the start if this is not the case.

Remove the adhesive weight.

4. FINAL OPERATION

- Refit the wheel(see 35A, Wheels and tyres, Wheel: Removal - Refitting) .

WHEELRIMIDENTIFICATION

1. IDENTIFICATION

1- MARKING

There are two types of identification marking on the wheel rims:

- engraved marking for steel wheel rims,
- cast marking for alloy wheel rims.

The marking gives the main dimensional specifications of the wheel rim.

This marking may be:

- complete, for example 6 J 15 5 CH 36,
- simplified, for example 6 J 15.

	Wheel type	**6 J 15**
1	Width (in inches)	6
2	Rim edge profile	J
3	Nominal diameter (in inches)	15
4	Number of holes	5
5	Anchorage profile of the tyre	CH
6	Offset (in mm)	36

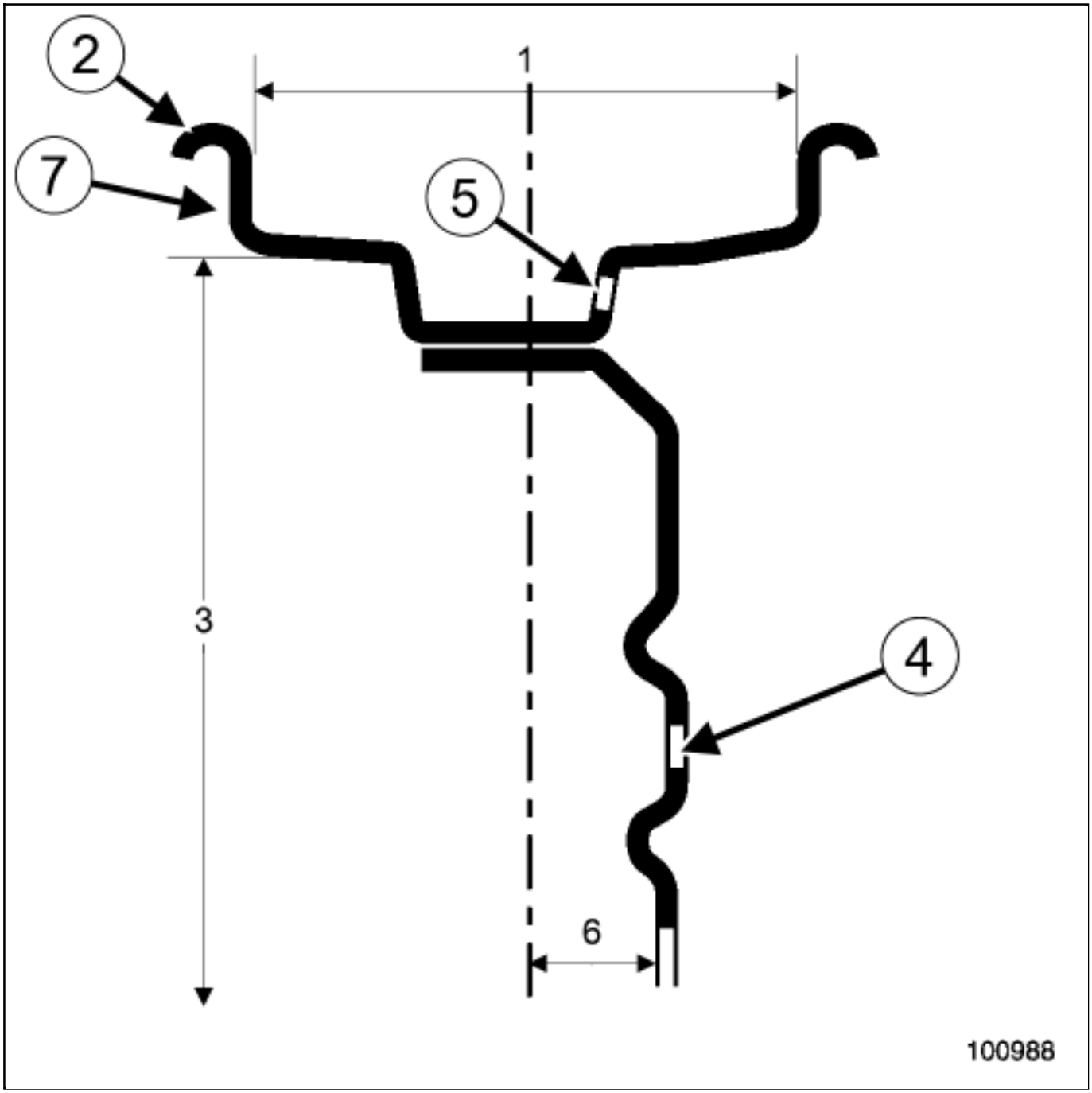

There are 3 types of wheel rim edges(2) :

- those with two flat edges,
- those with two raised edges,
- those with one flat edge and one raised edge.

2- INSTALLATION DIAMETER FOR THE WHEEL BOLTS

The wheel bolts are positioned with a pitch circle diameter of 100 mm(3 holes).

3- RIM RUN-OUT

The maximum run-out is measured at the wheel rim edge(7) .

0.3 mm

4- OUT-OF-ROUNDNESS

The maximum out-of-round value is measured on the tyre bead bearing surface.

Repair-13x05x01x03-02x07-1-17-1.xml

XSL version : 3.02 du 22/07/11

WINDOWDETACHMENT:DESCRIPTION

Note, one or more warnings are present in this procedure

Special tooling required	
Wire insertion tool for removing bonded mirror glass.	Car. 1033
Universal protector	Car. 1847

1. PREPARATION

WARNING

Wear protective gloves and goggles when cutting the window or sunroof operating mechanism.

Use an appropriate work station when replacing a window or sunroof mechanism.

Protect the vehicle interior.

Remove the various trims and interior and exterior equipment (see the MR of vehicle concerned).

Protect the bodywork around the window using masking tape.

Position the universal guardUniversal protector (Car. 1847) or remove the upper section of the dashboard (according to vehicle).

2. CUTTING

1- FIRST PROCEDURE

Make a hole in the cement bead with a wire insertion tool.

Note:

Place the wire insertion tool into the most accessible part of the window or sunroof mechanism.

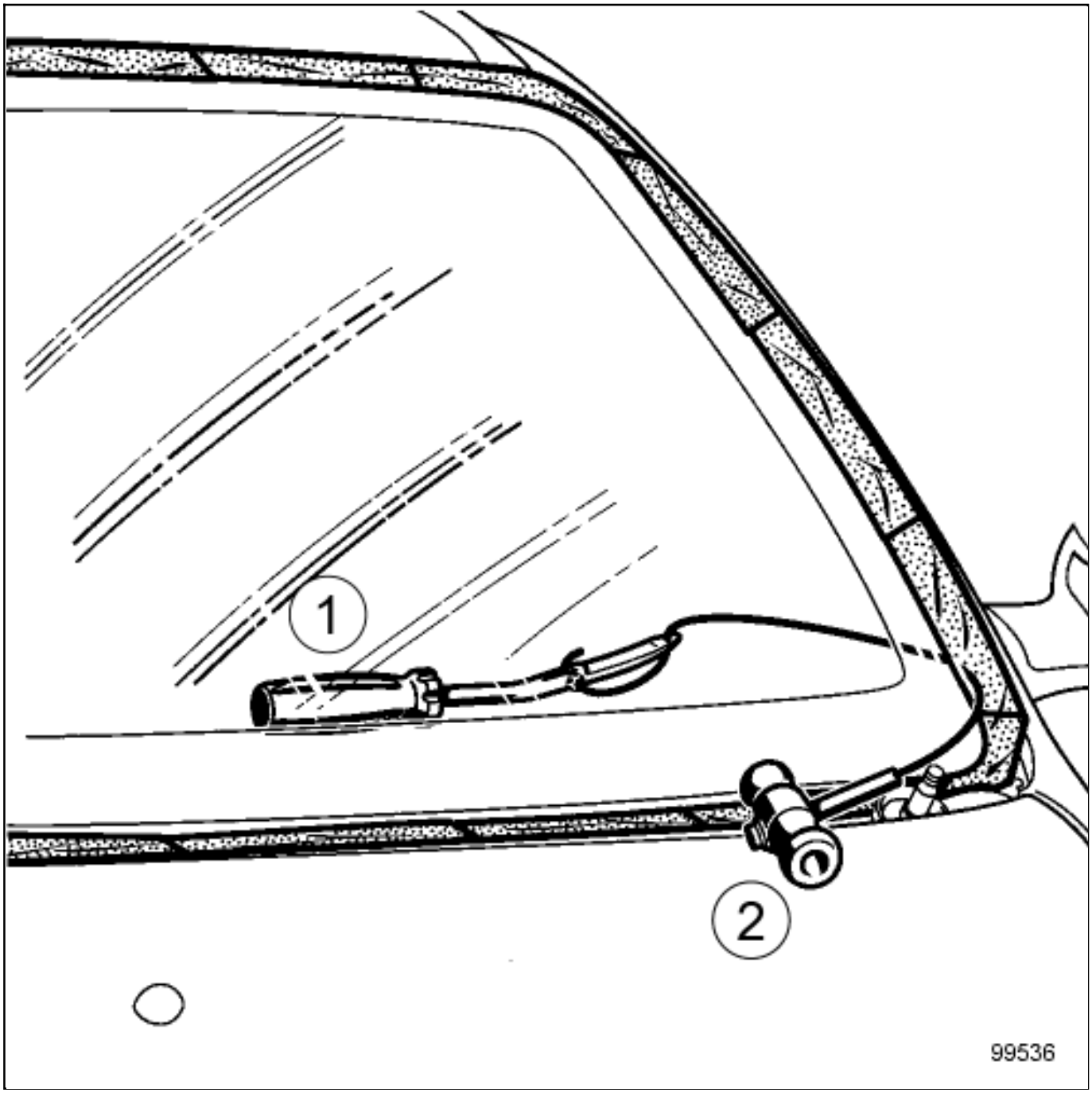

The first person places the retaining tool(1) on the cement bead, from inside the vehicle at approximately 300 mmfrom where the wire passes through.

The second person pulls the pulling handle(2) from outside the vehicle towards the first person's tool.

Repeat this operation until the cement bead has been completely cut.

CAUTION

To prevent any bonded component from being damaged during the cutting operation, make sure that the wire does not damage the parts near the cement bead.

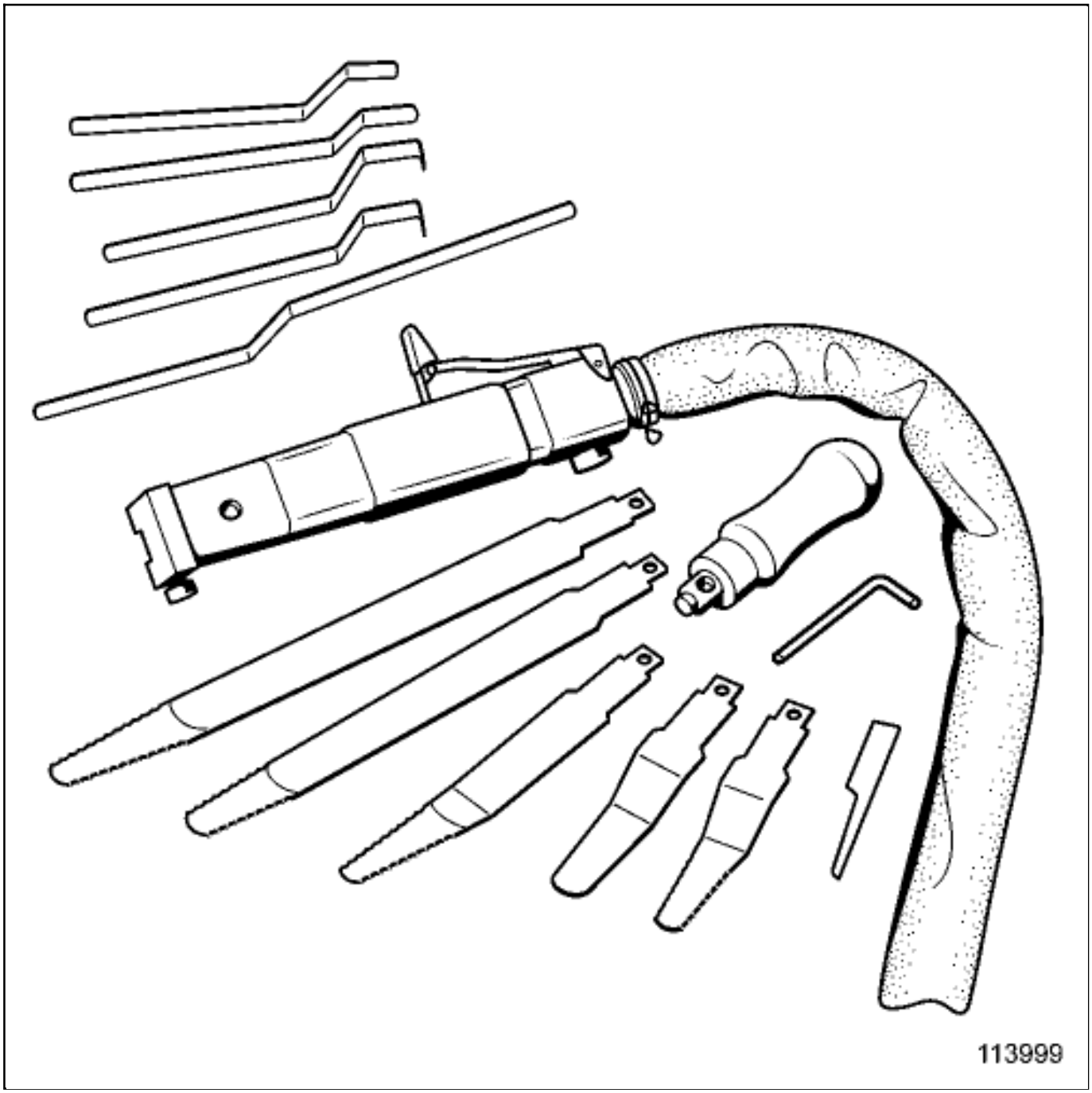

Part no.: 77 11 171 946

The cement bead can be cut using a pneumatic cutting tool(see 54A, Windows, Window removal tool: Use) .

2- SECOND PROCEDURE

Note:

Use a cutting wire with a square cross-section.

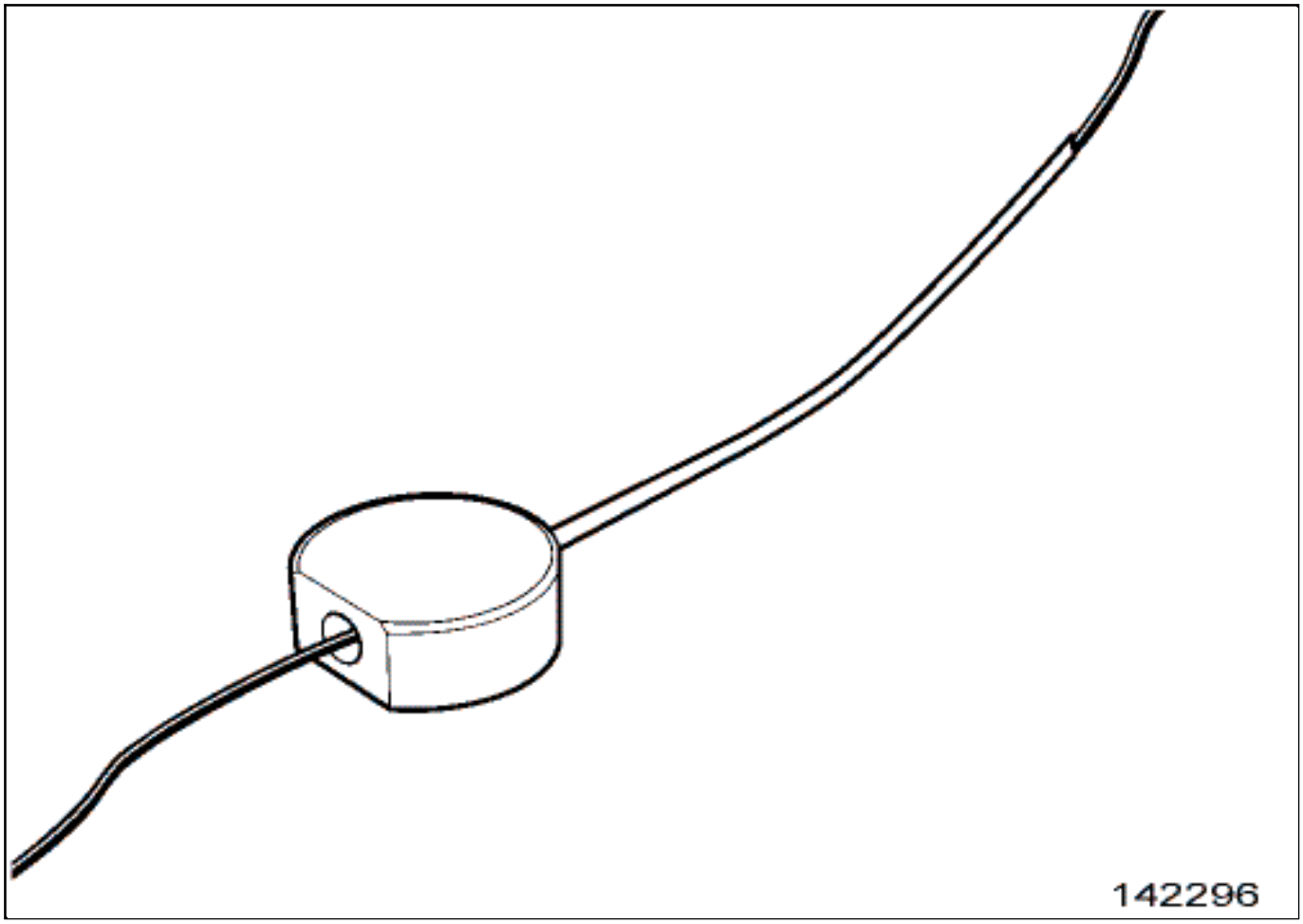

Part no.: 77 11 171 909

Insert the cutting wire in the wire insertion tool, or in a small 2.5 mmdiameter tube.

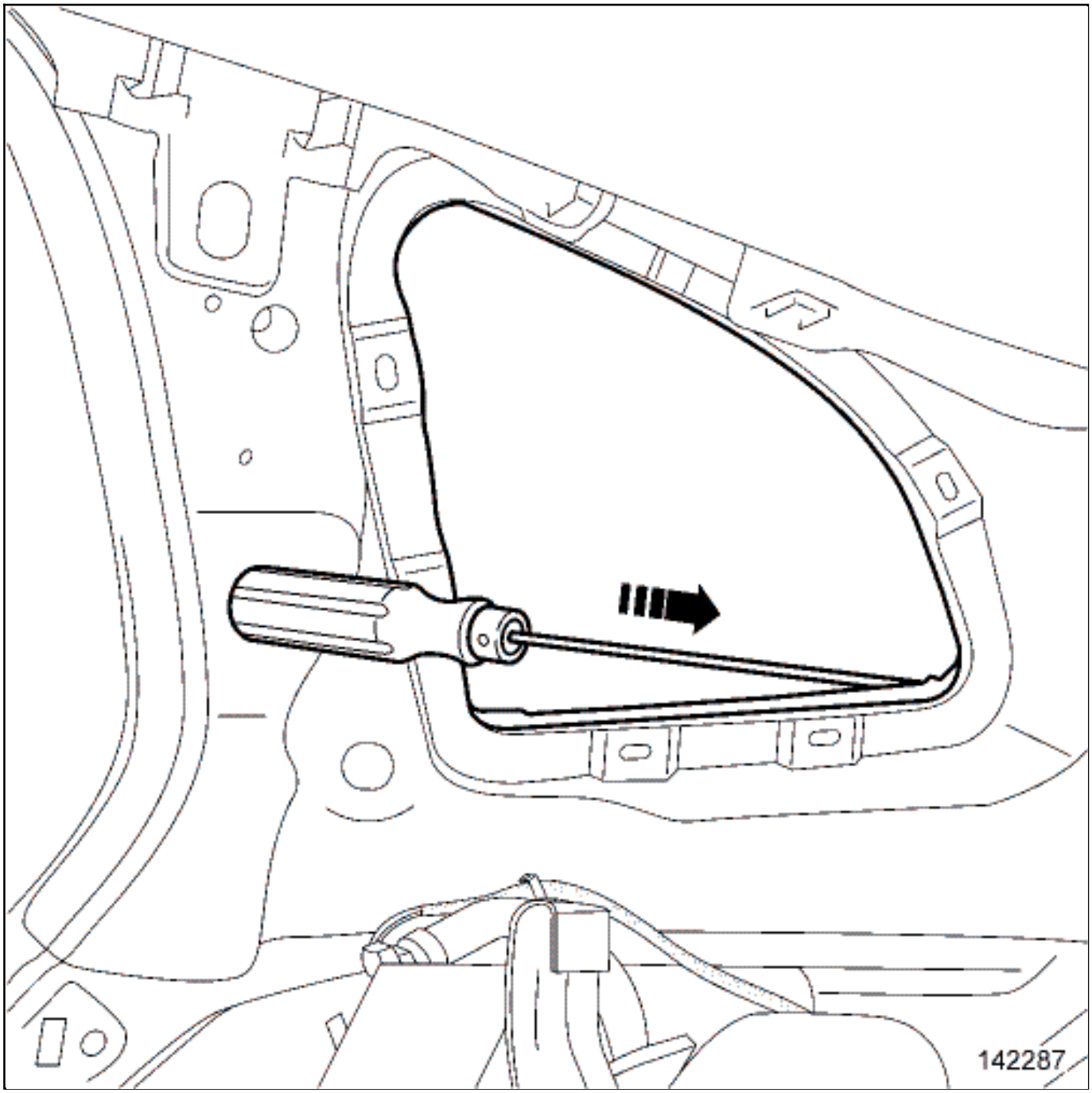

Using the Wire insertion tool for removing bonded mirror glass.(Car. 1033) , pierce the cement bead of the window at the most accessible place.

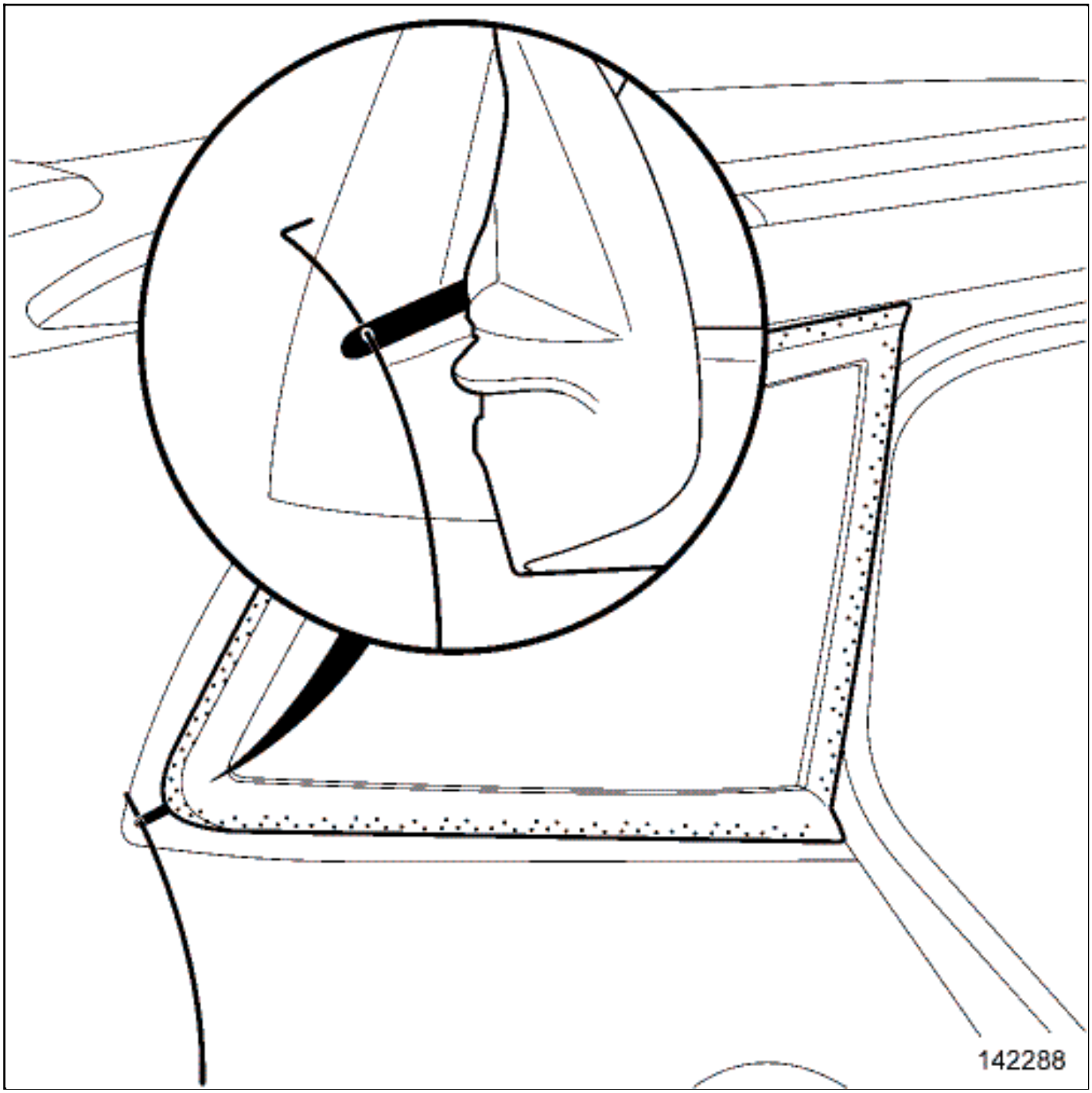

Insert the cutting wire in theWire insertion tool for removing bonded mirror glass.(Car. 1033) .

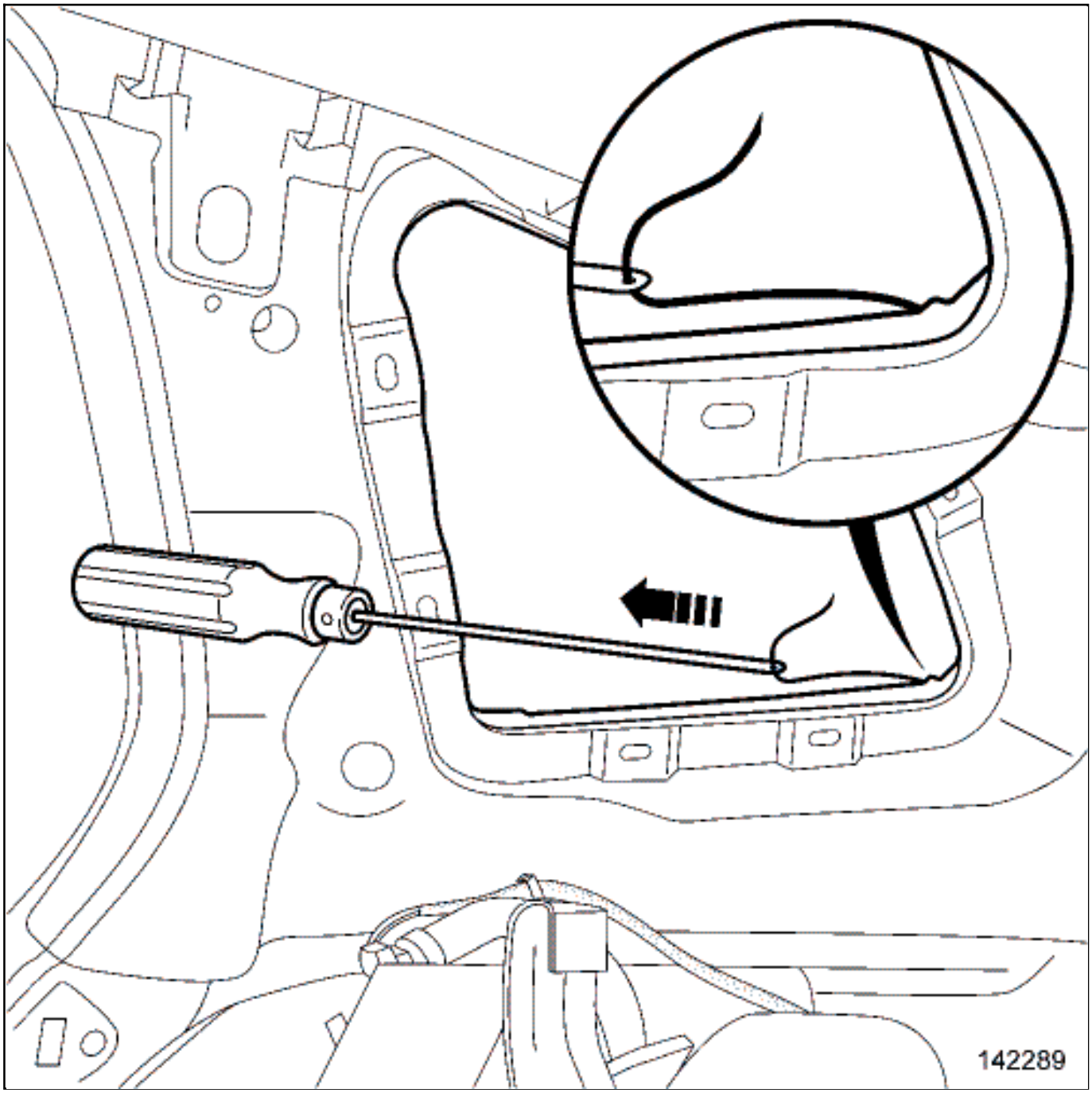

Pass the cutting wire from the exterior towards the interior using theWire insertion tool for removing bonded mirror glass.(Car. 1033) .

Fit the first pulling handle on the section of the cutting wire inside the vehicle.

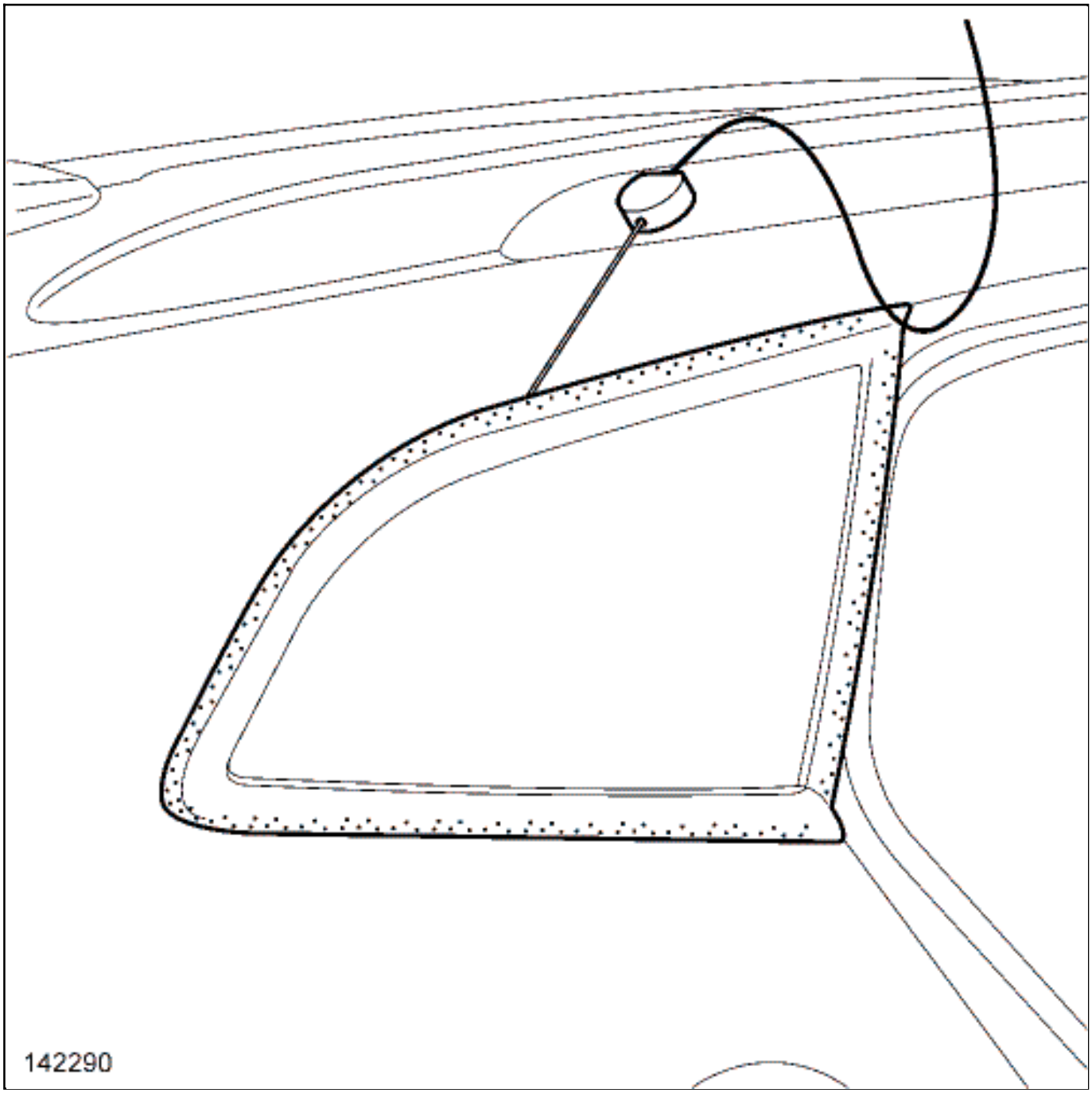

Using the wire insertion tool, slide the cutting wire between the rear quarter panel window and the panelwork around the entire edge outside the vehicle.

Cut a sufficient length of cutting wire.

Remove the cutting wire insertion tool.

Note:

When passing the cutting wire into the vehicle interior, be careful not to cross the 2 wires.

This would make cutting impossible.

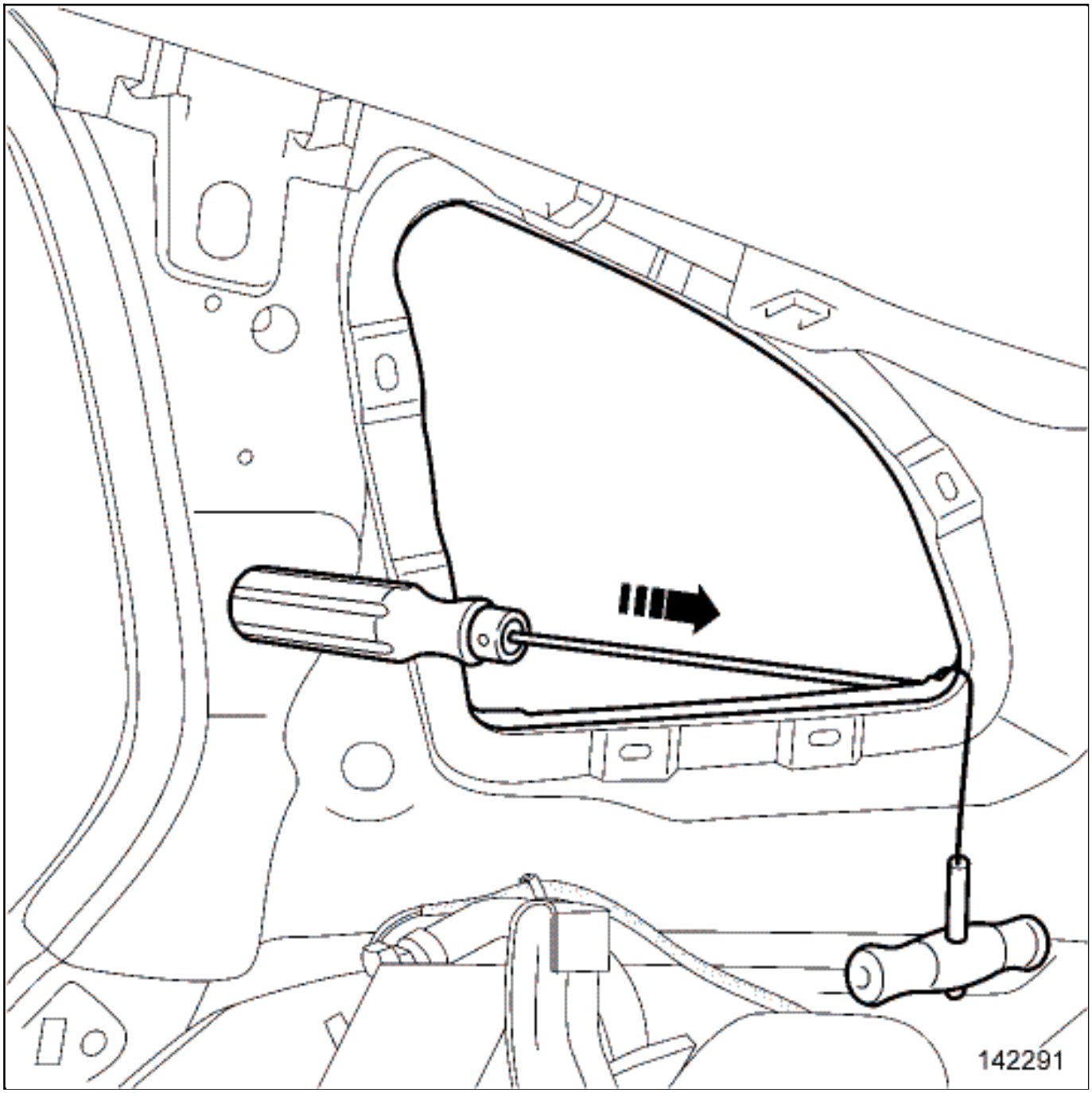

Pass the Wire insertion tool for removing bonded mirror glass.(Car. 1033) near the first piercing of the cement bead.

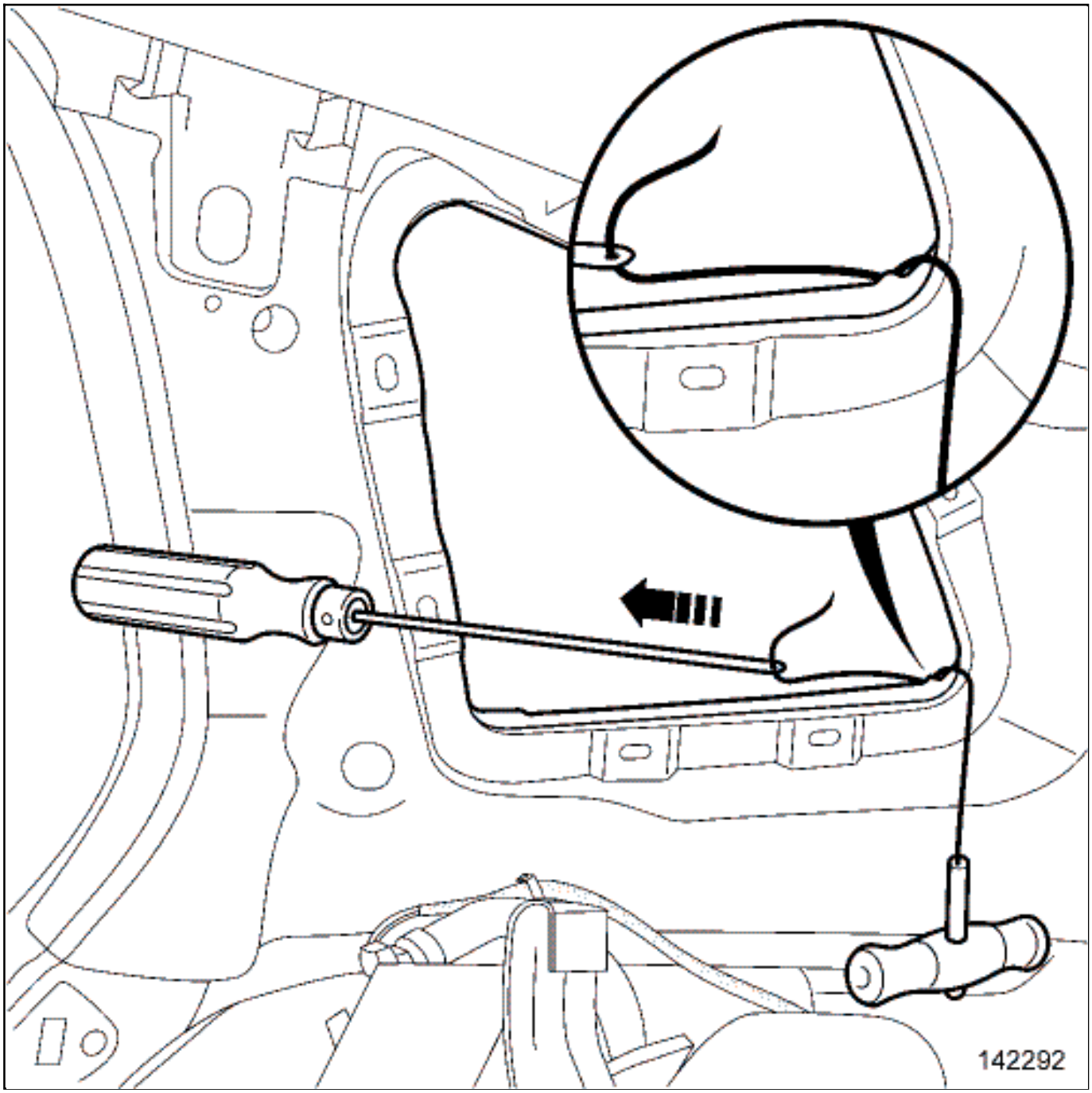

Pass the cutting wire from the exterior towards the interior using theWire insertion tool for removing bonded mirror glass.(Car. 1033) .

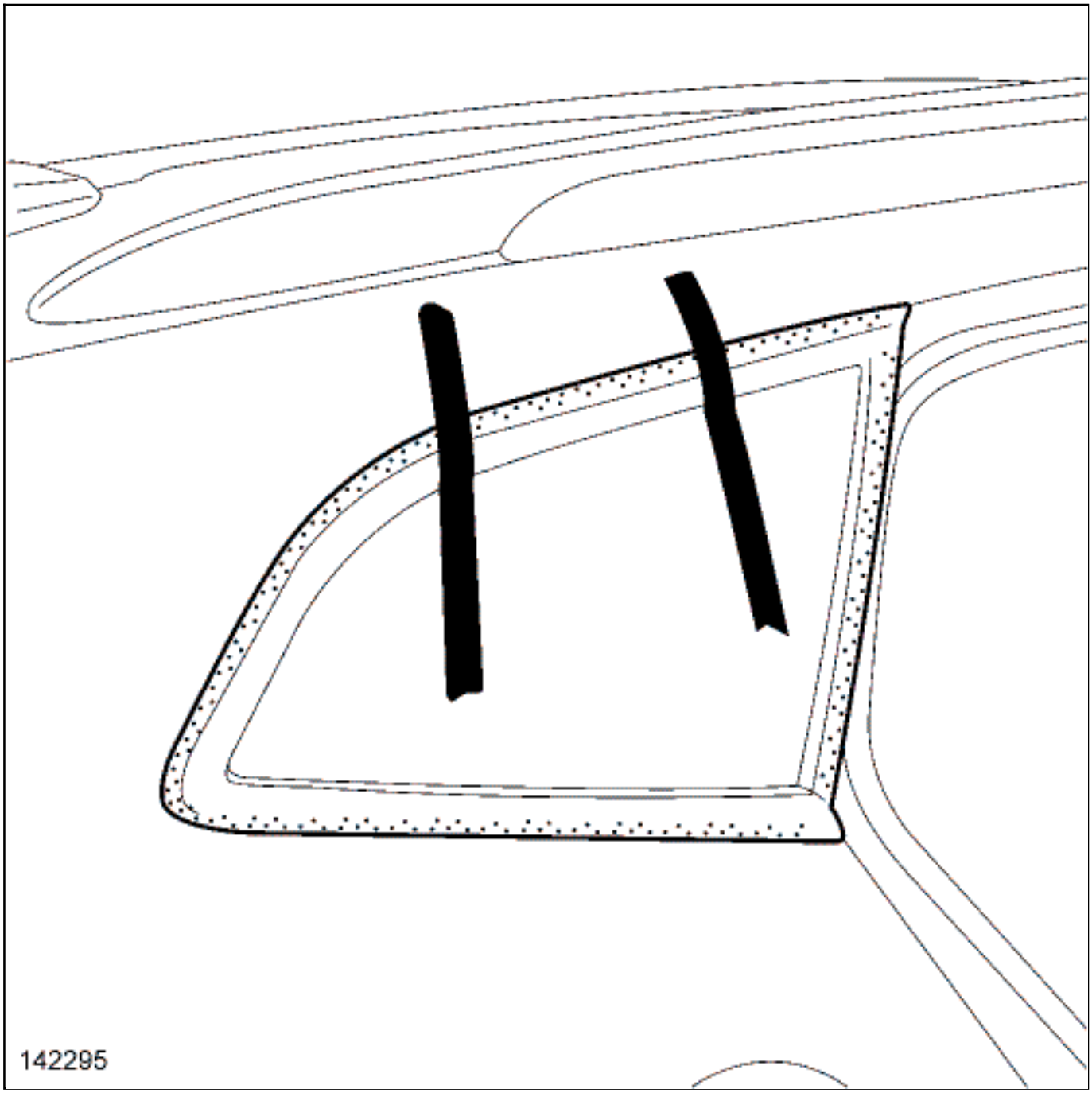

Secure the window on the panelwork using masking tape.

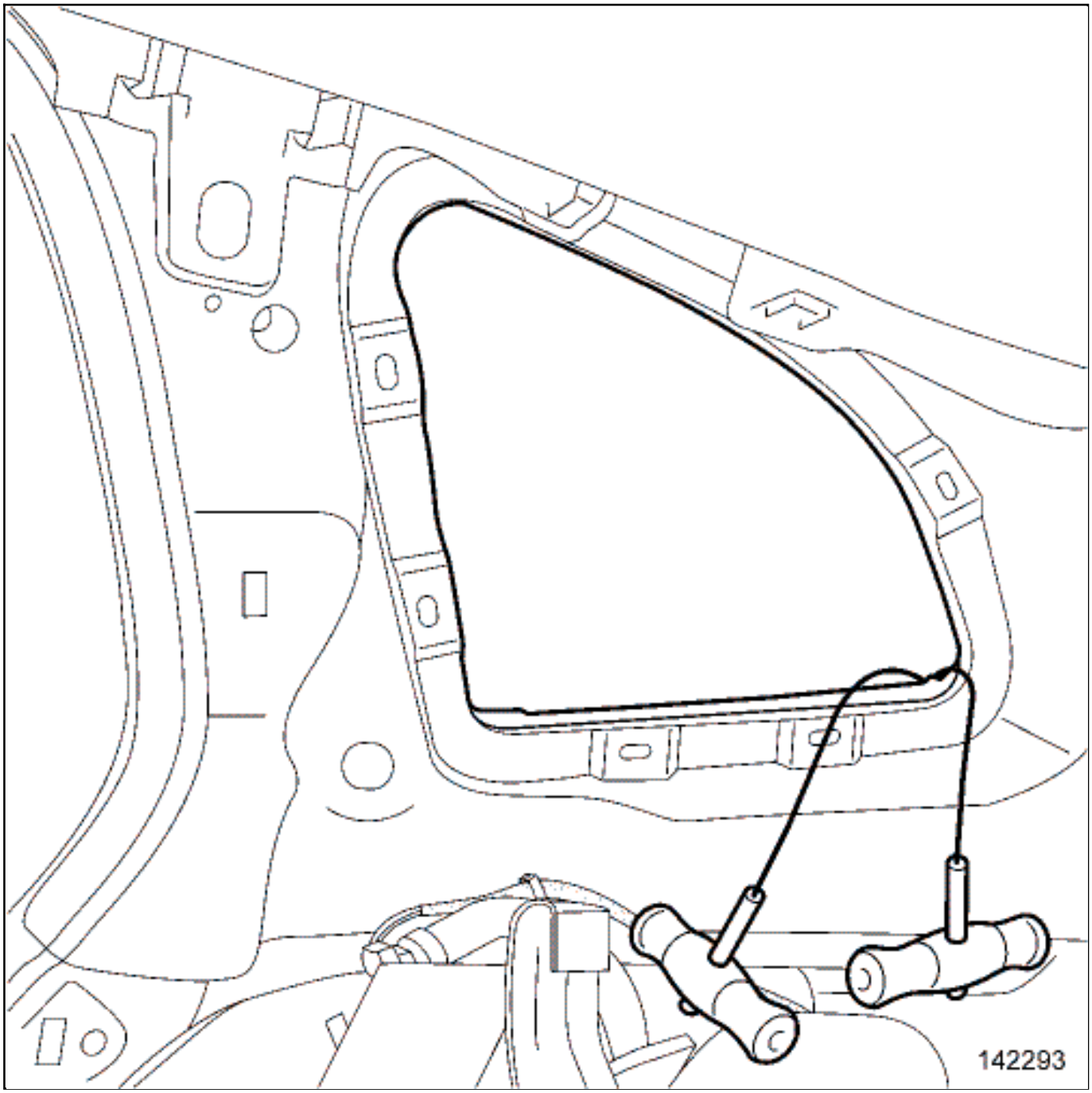

Fit the second pulling handle on the other section of the cutting wire inside the vehicle.

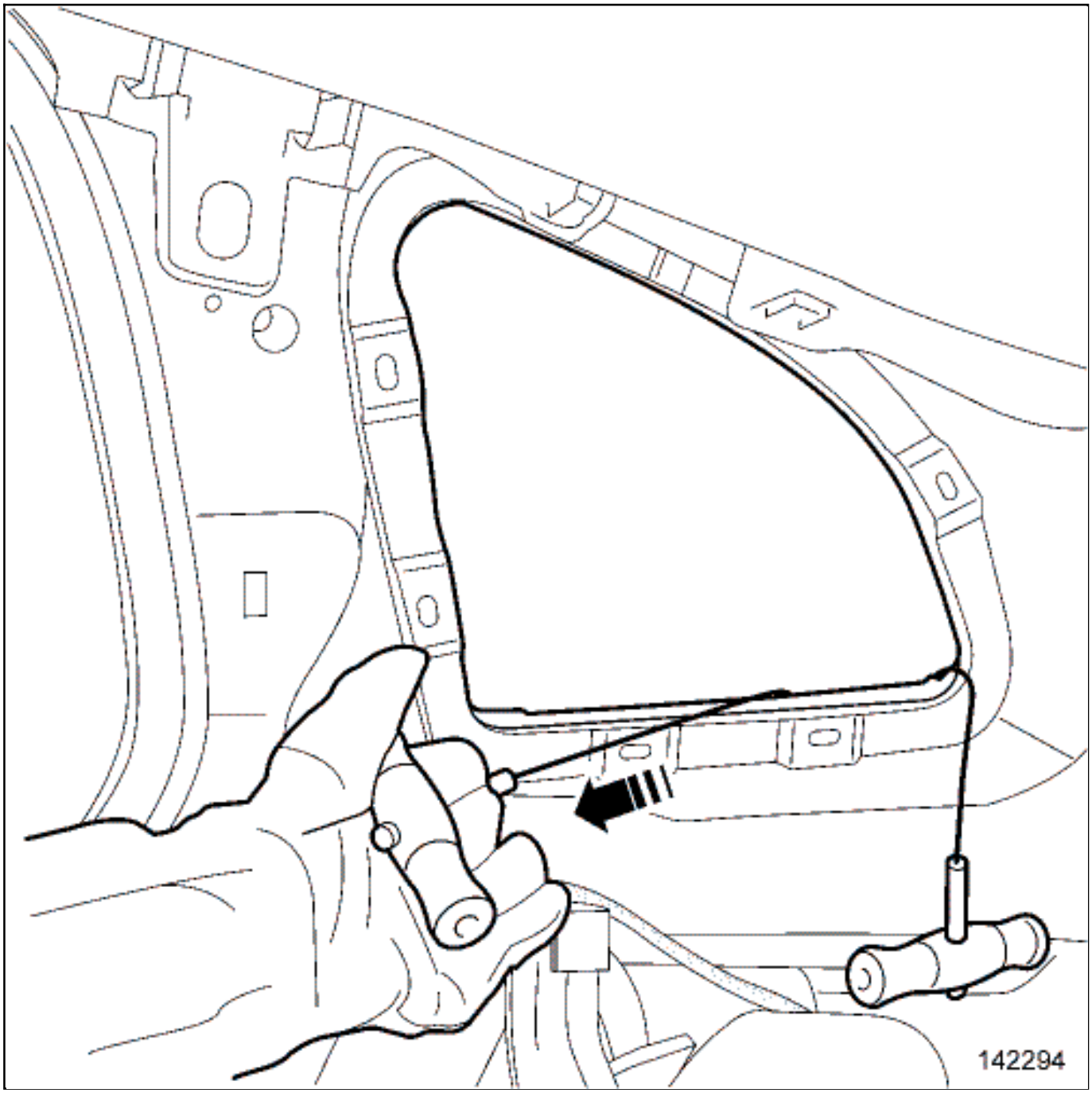

Pull one of the two pulling handles until the cement bead is completely cut.

Note:

Reduce the length of the cutting wire as you cut.

Remove the window.

3- THIRD PROCEDURE

PART NO.: 77 11 573 521

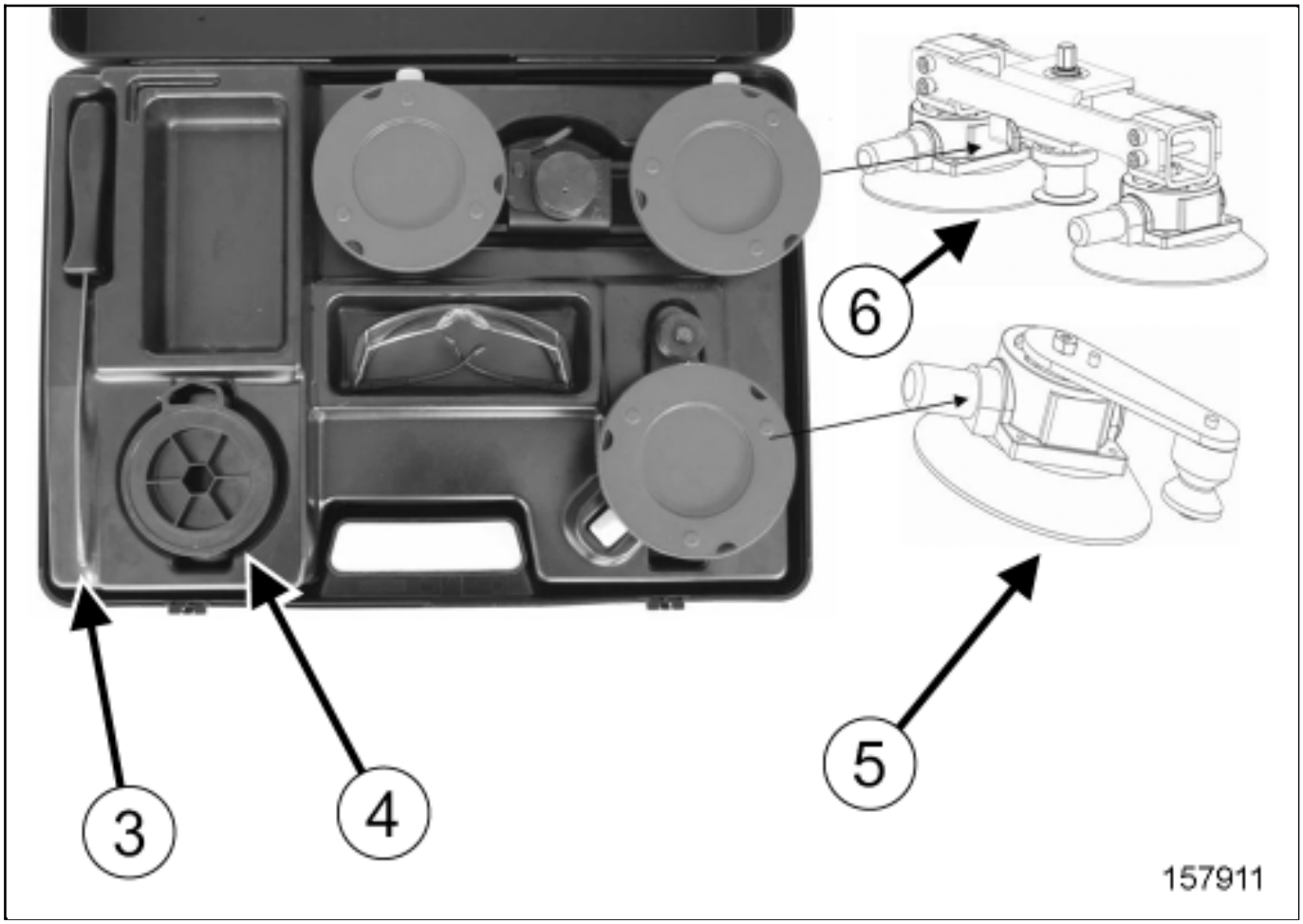

(3) Wire insertion tool

(4) Cutting wire

(5) Roller

(6) Winding device

Wind the cutting wire(7) around a mounting bolt.

Pass the cutting wire from the exterior towards the interior using the wire insertion tool.

Note:

While tensioning the cutting wire ensure that the cutting wire is in the correct position under the windshield.

Grip the other end of the cutting wire on the winding device .

Cut the cement bead until the middle of the windshield.

Note:

The angle must be between 0˚and 45˚and the winding of the cutting wire on the winding device must be done correctly.

Move the winding device and install the roller as the cutting progresses.

Continue the cutting until the cutting wire can't be guided by roller.

Remove the roller and continue the cutting.

Repeat the operation until the cutting is complete.

Repair-50x04x01x03-02x21-1-1-1.xml

XSL version : 3.02 du 22/07/11

WINDOWS: REPAIR

1. AREAS OF APPLICATION

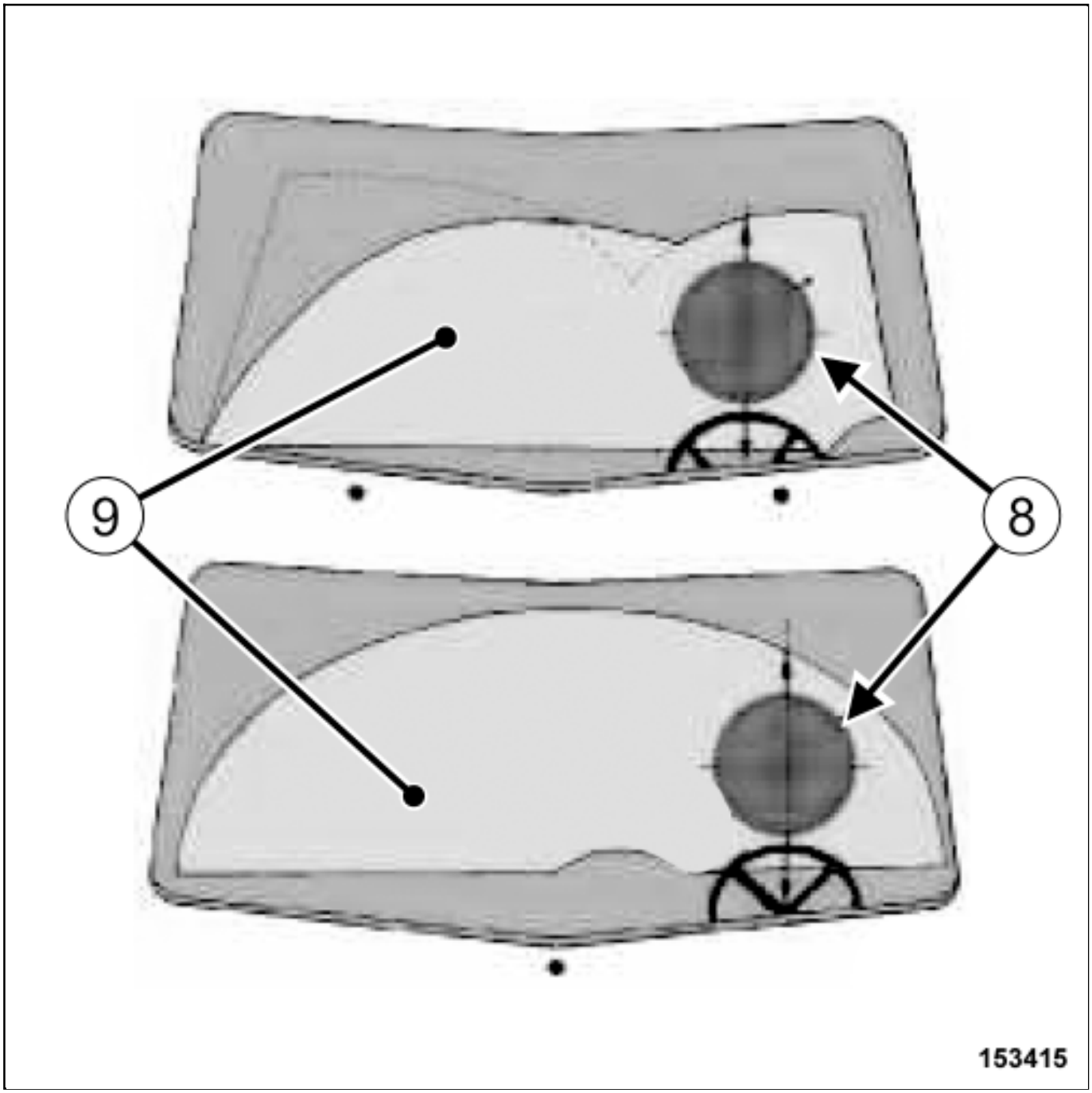

- The chip must be recent and located outside the field of vision of the driver(8) .

The area can be defined simply using the sweep of the wipers(9) .

2. PRECAUTIONS FOR THE USE AND STORAGE OF THE PRODUCTS

❑ Before beginning all operations, check that the windscreen to be repaired is clean and dry and at an ideal temperature.

The ideal conditions are between 15˚and 25˚.

If this is not the case, leave the vehicle engine running for a few minutes with de-icing at the maximum until the windscreen is slightly warm.

❑ Do not store resin or cans of resin with food.

❑ To keep the resin in good condition, these cans must be stored in the dark, in a cool dry place.

Note:

Do not expose the resin to frost.

❑ Do not expose the products to the sun or to a fluorescent light.

❑ Do not open the protective envelope before using the resin.

❑ The resin reacts to exposure to ultra-violet radiation (UV). That means that the light changes the resin from a liquid state to a solid state.

3. WHAT CAN BE REPAIRED

STAR

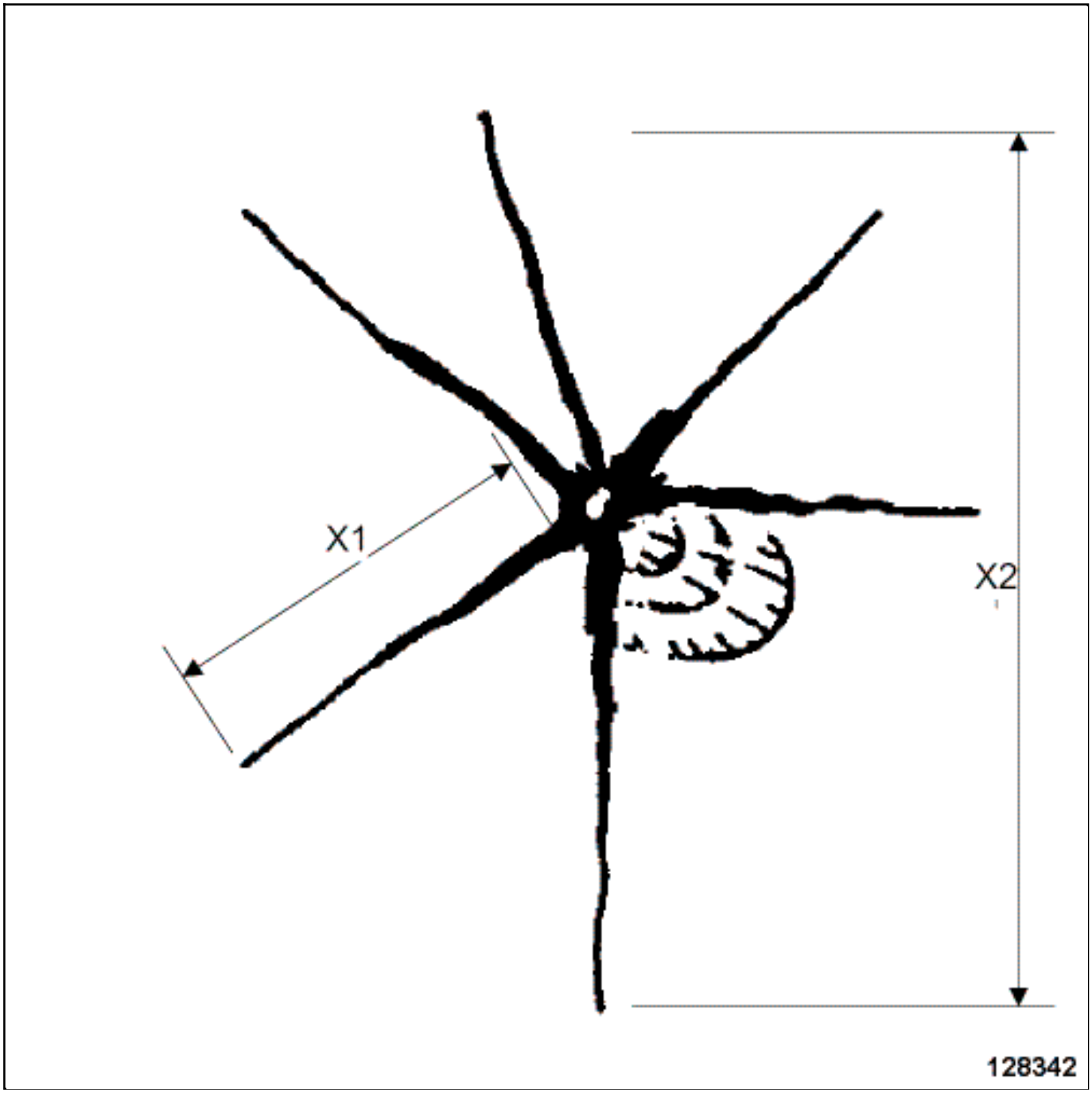

"Arm" of the star(x_1) = 10 mmto 12 mm.

"Arm" of the star(x_2) = 40 mm.

BUBBLE

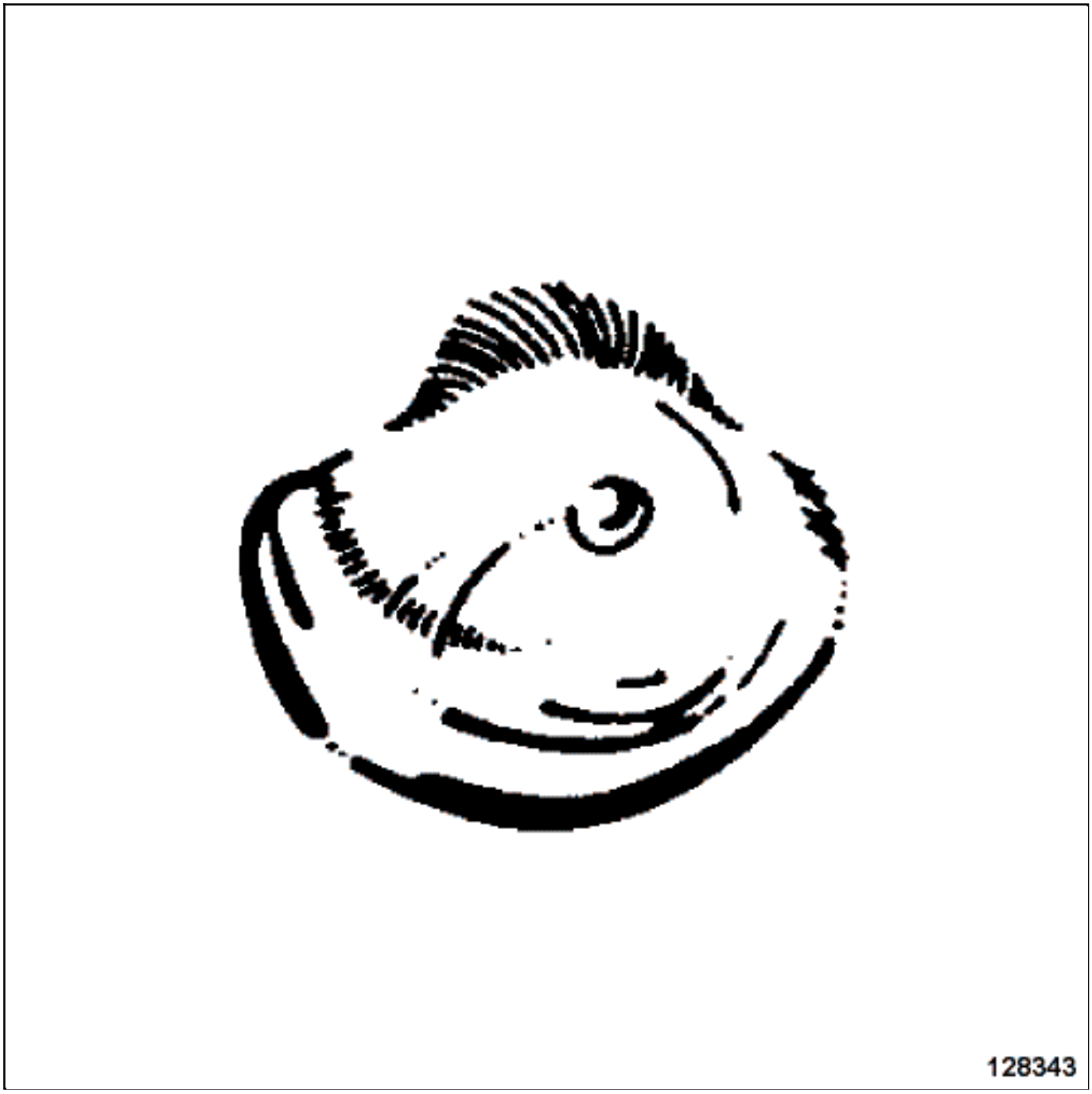

Bubble max ∅ = 20 mm.

HALF BUBBLE

Half bubble max dia. = 20 mm.

STAR + BUBBLE + CRACKS

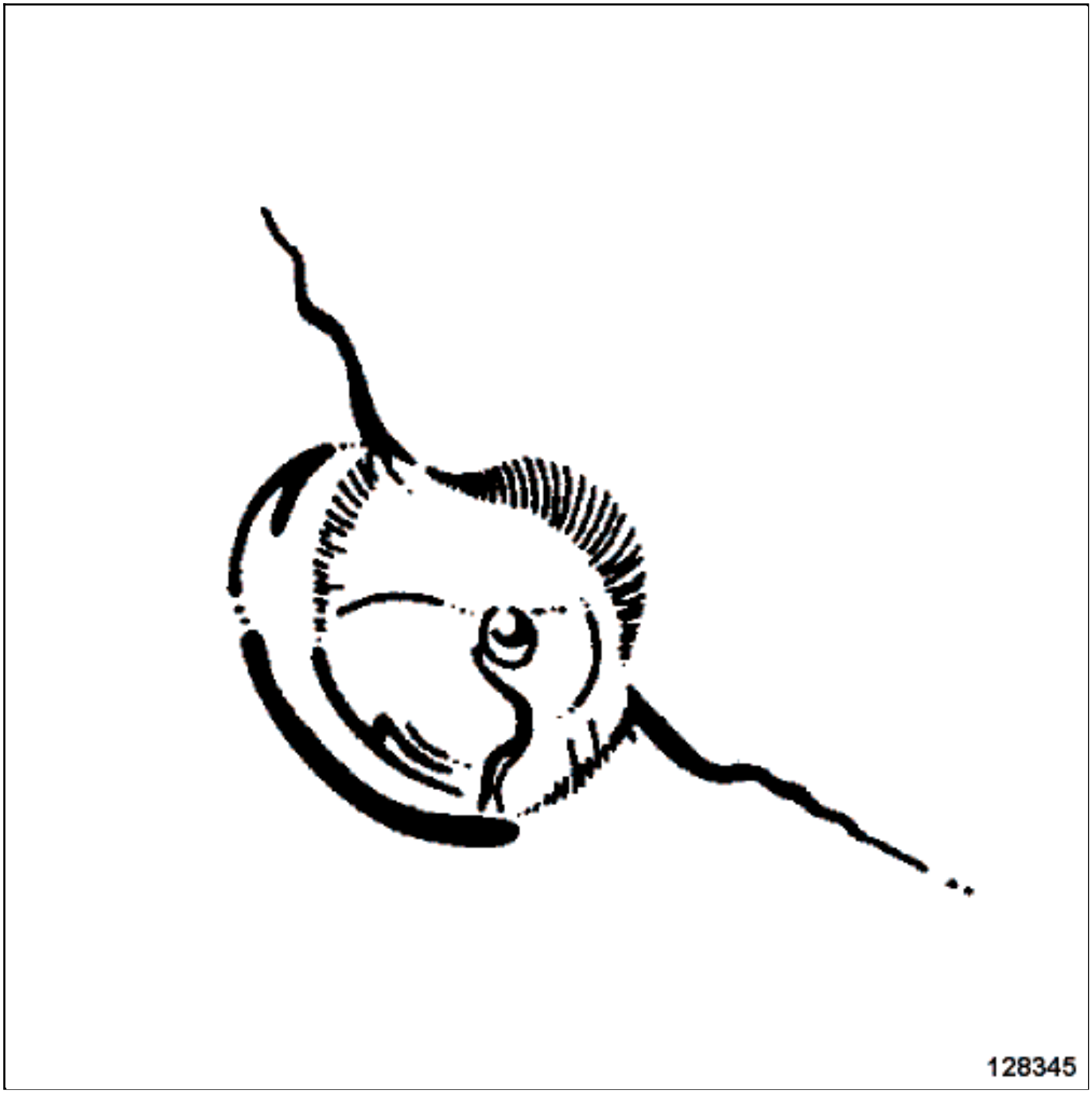

Star + bubble + crack max = 40 mm.

4. WHAT MUST NOT BE REPAIRED

- athermic windscreen,
- heated windscreen,

- the circular area of 300 mm diameter in the field of driver's vision(8) ,
- any crack more than 60 mm long,
- any chip at less than 40 mm from the edge of the windscreen,
- any chip at less than 20 mm from any sensor,
- if there are more than three chips,
- any chip that has resulted on oxidation of the intermediate layer.

> Note:
>
> This oxidation is characterized by a round opaque zone.

5. GENERAL REPAIR METHOD

> Note:
>
> This section considers the basic procedures for repair with the appropriate tools.

1- INSPECTION OF CHIP AND USE OF THE CARBIDE-TIPPED STYLUS

- Take great care when examining the chip.
- Check whether the radial cracks spread and note their length and the depth.
- Decide whether holes should be drilled at the ends of the cracks.
- Repair only the first layer.

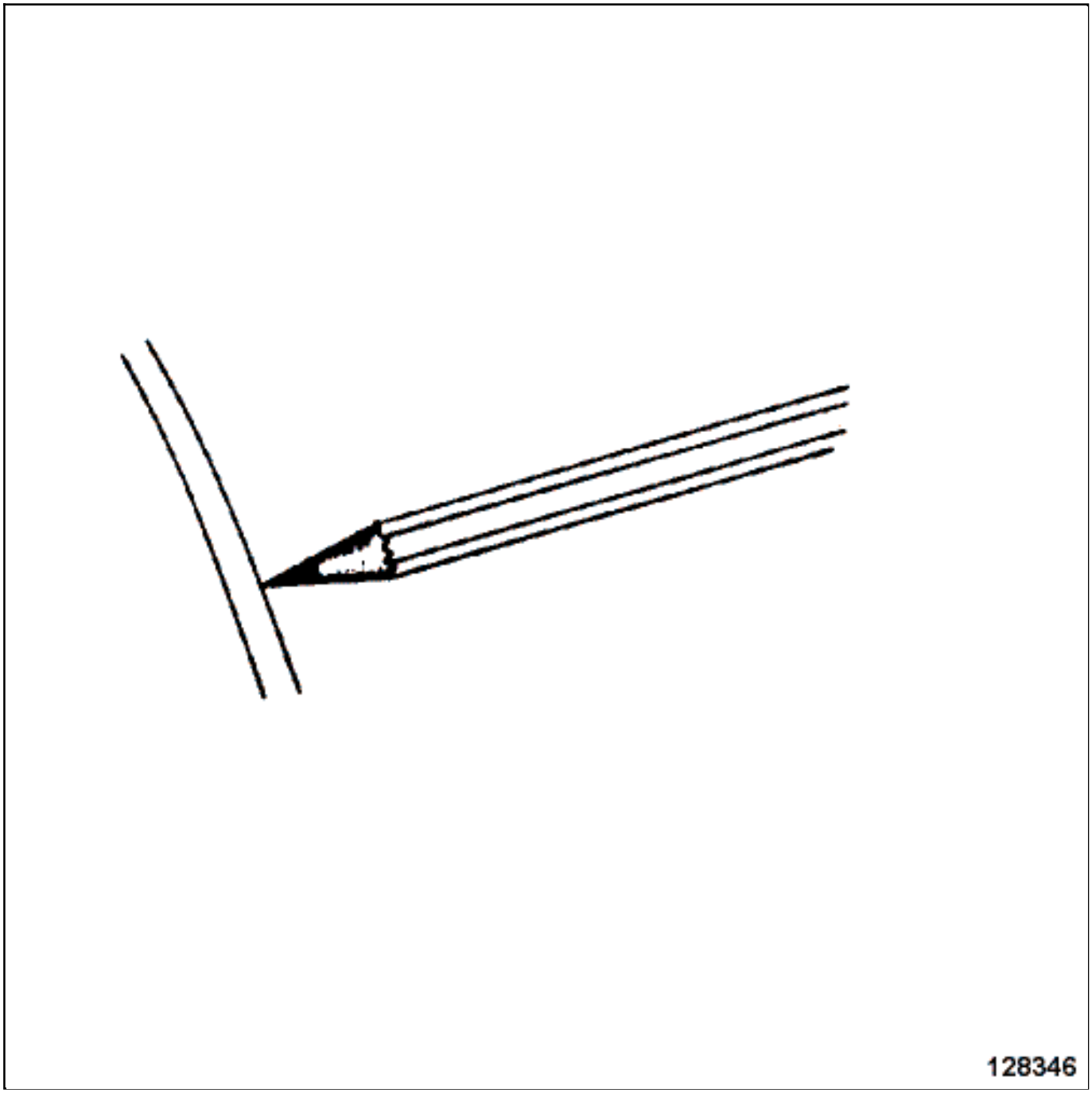

-

Use the carbide tip of the stylus to gently scratch away any dirt or glass in the chip crater.

Note:

Do not enlarge the chip.

❑

Place the magnifying mirror on the inside of the windscreen so that the chip on the outside is clearly visible.

The magnifying mirror enables you to see the progress of the repair clearly.

3- FITTING THE TOOL HOLDER

❑

This is your most important tool.

It is used for injecting the resin when it is equipped with the injector.

❑

Find a position that makes operation easy.

It is desirable to locate the tool holder below the chip.

1)FITTING THE TOOL HOLDER

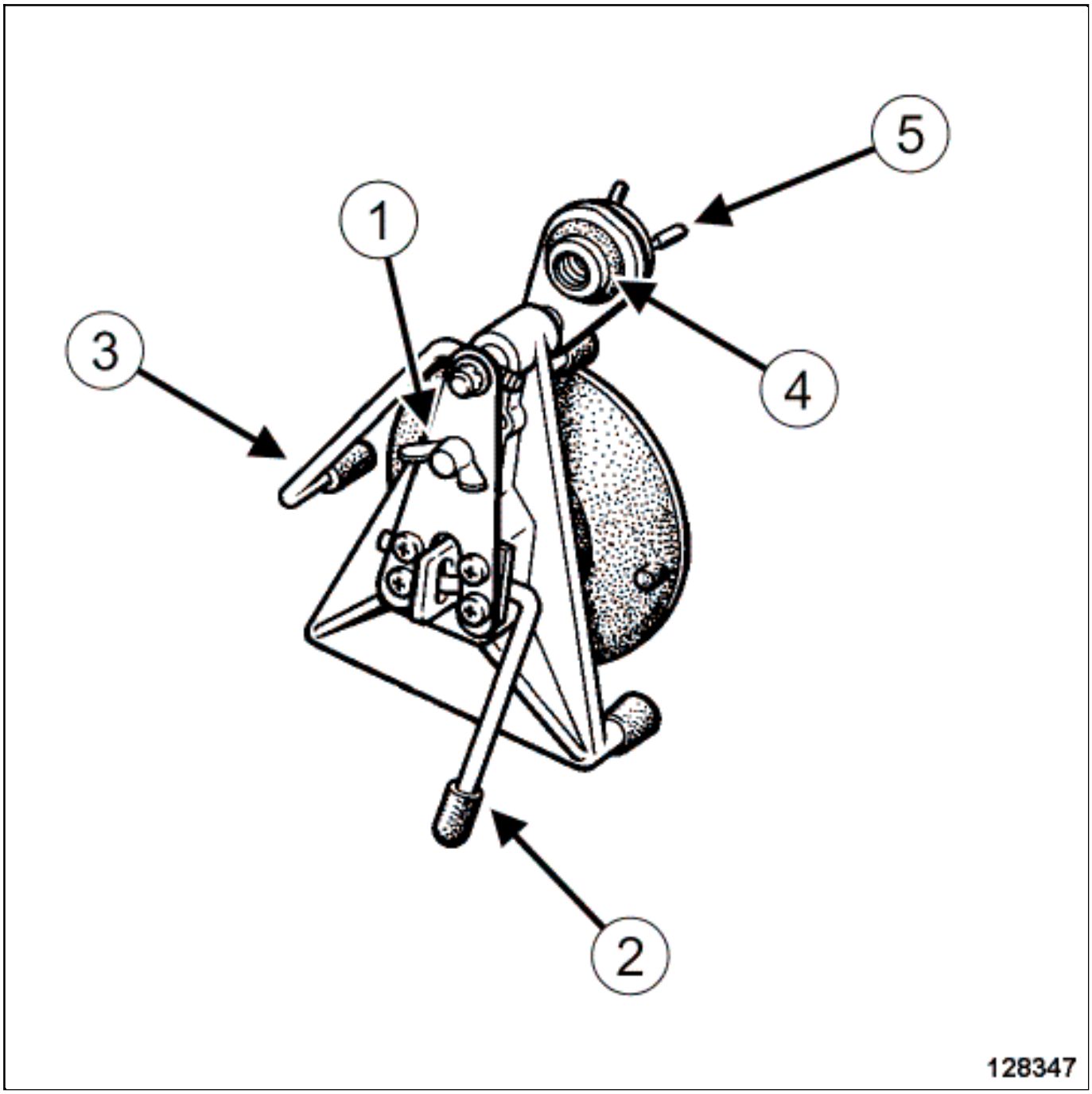

- Fully undo the spider support(1) so as not to put pressure on the chip.
- Apply lubricating gel to the edge of the suction cup.
- Check that the suction cup lever(2) is pointing forward.
- Hold the tool holder so that the control lever(3) is right up against the left-hand side of the tool

holder.

- Centre the injector holder(4) above the point of impact of the chip.
- Press the tool holder firmly so that the suction cup is correctly pressed against the windscreen.
- Use the lever(2) to lock the suction cup.

The spider of the threaded gun can then be handled freely.

- Tighten the pressure bolt(1) of the threaded gun until the spider(5) is immobilised on the windscreen.

Note:

Check that the spider feet are definitely in contact with the glass.

This is very important as it ensures a perfectly perpendicular position for injection.

4- INJECTION

- A resin sachet contains a bottle of resin and a plastic injector.

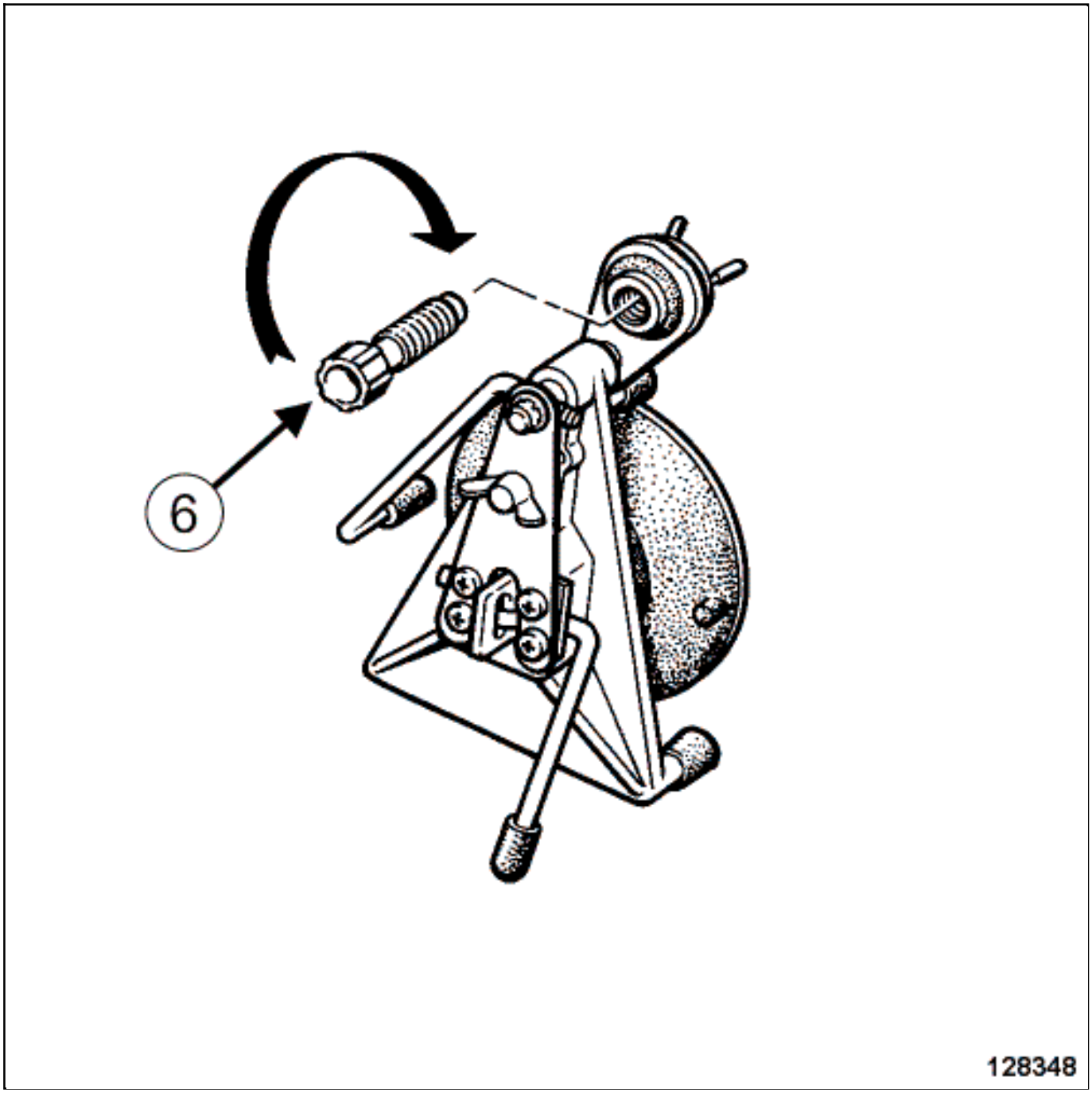

- Without tightening the injector(6) , place it on the injector holder to bring it in contact with the glass.

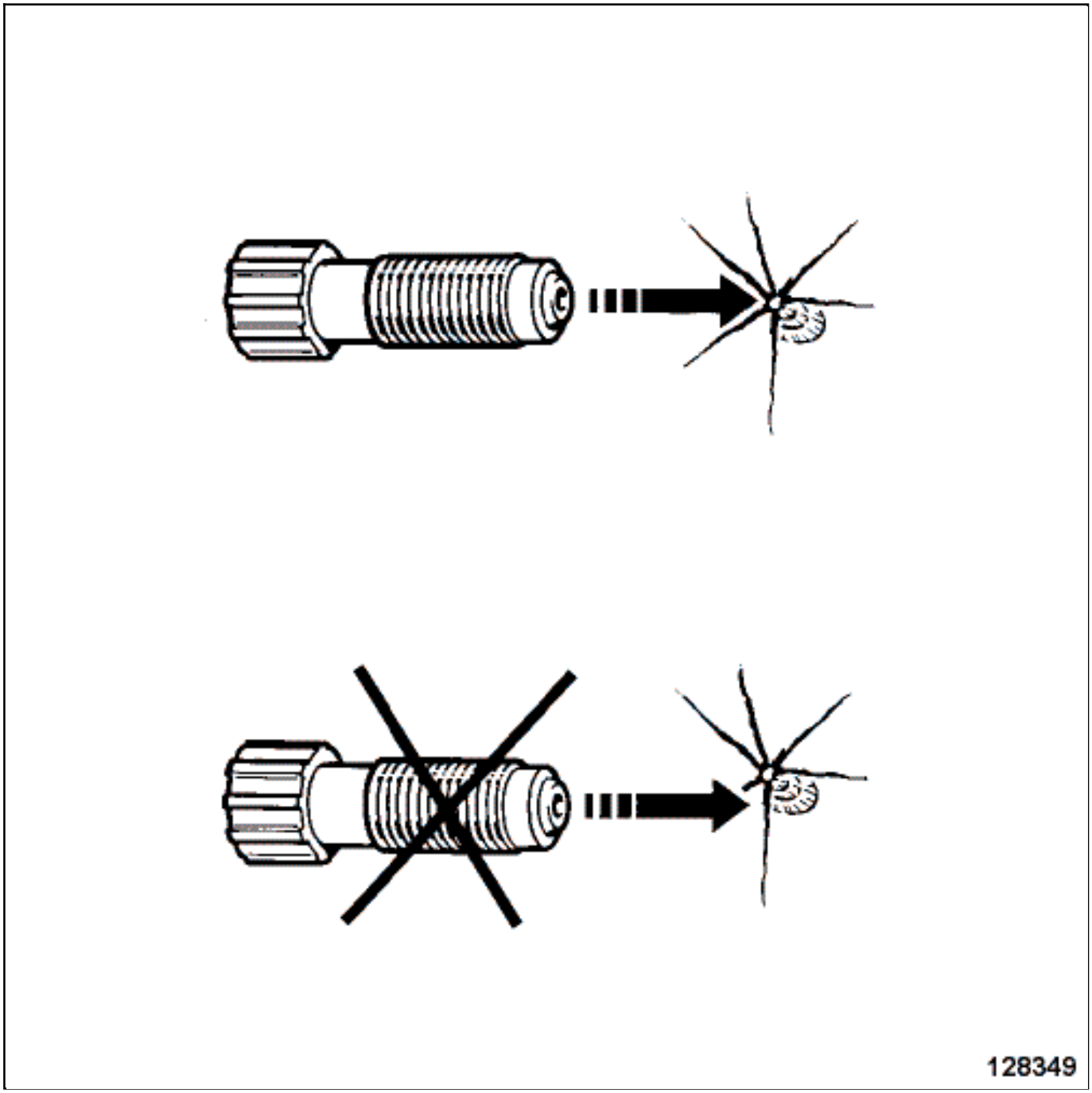

- Centre the injector opposite the crater of the chip.

- Remove the injector, taking care of not to move the injector holder.

- Take the bottle of resin and remove the small protective plug.

-

Cut off the tip of the bottle using the scraper blade (supplied in the kit).

❑

Unscrew the piston of the injector by 5to 6 mm.

❑

Fill the injector with resin up to the edge on the white rubber seal side.

Note:

To fill the injector more easily, use the resin bottle as a dropper.

Check that the edge of the white rubber seal is clean and dry, wiping off any resin that may be there.

❑

Put the flask of resin away where it will not be exposed to daylight.

❑

Refit the injector on the injector holder but do not tighten it.

❑

When the white rubber seal comes into contact with the glass, tighten it by one or two additional turns in order to obtain the seal needed for applying pressure to the resin.

❑

Do this by holding the body of the injector with two fingers and screwing the piston very slowly with the other hand.

❑

During this operation, look in the mirror to observe the moment when the seal of the injector expands slightly.

❑

Continue to screw the piston in by no more than one turn, then do not touch it any more.

❑

Wait for 1 minutes, then observe what happens in the mirror. You would normally expect to see an improvement.

- To accelerate the process of transferring the resin to the inside of the chip, from time to time you can undo the piston of the injector a little more than it was when you filled it with resin, without changing the position, and wait for a few seconds, then screw the piston up again until the seal expands once more.

- Repeat this operation several times until the chip has completely disappeared.

- The resin takes 2to 5 minutesto spread to the furthest ends of the cracks.

5- INSPECTION OF THE REPAIR

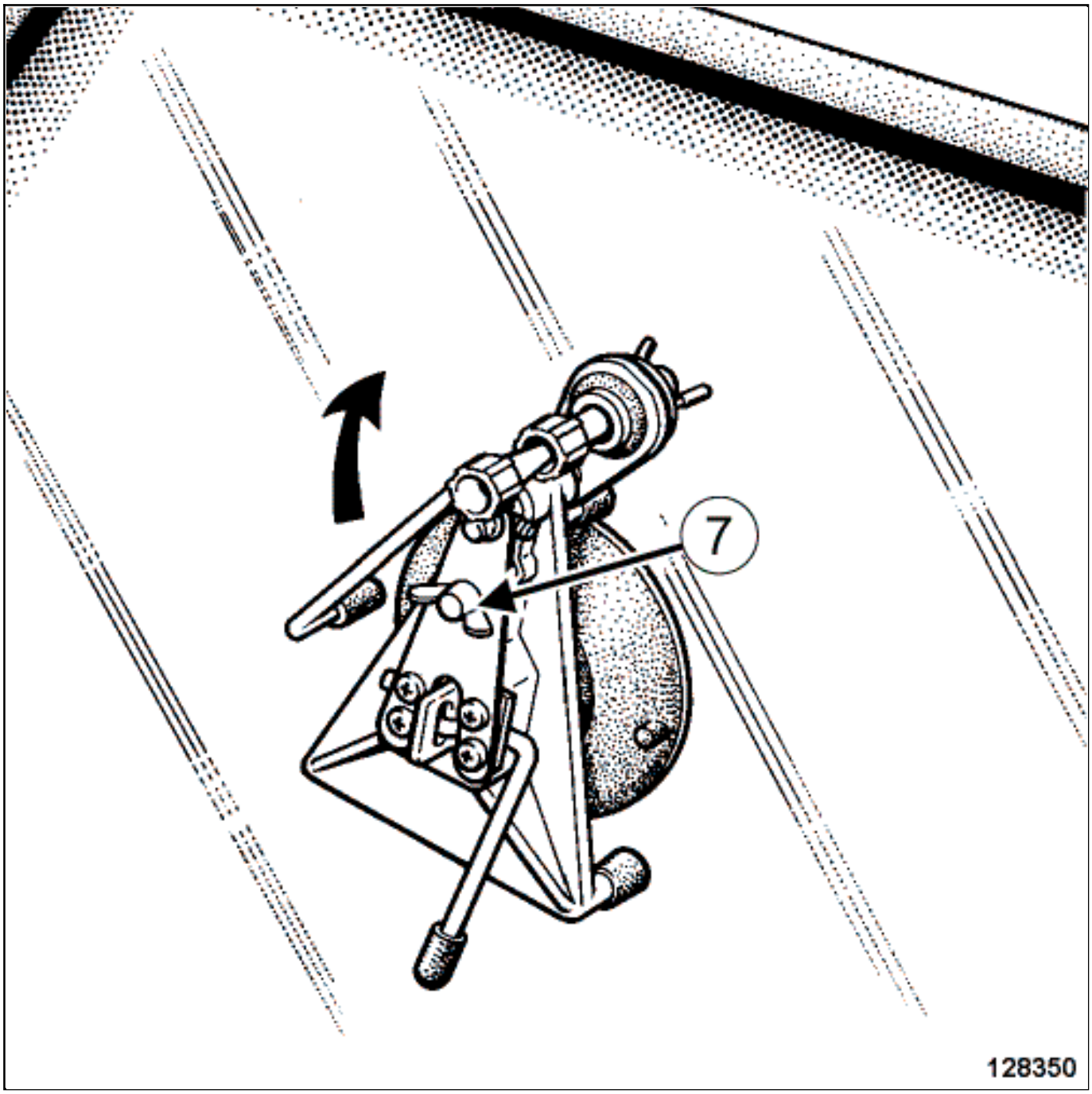

- Release the spider pressure using the bolt(7) .
- Rotate the injector assembly to free the area of the chip.

This will relieve all pressure on the repair area.

- Check and inspect the crack under different angles.
-

If no chip modification can be seen after 5 minutes, the glass must be drilled at the location of the crater (see When and how it is necessary to drill).

this means that when the projectile came into contact with it, the windscreen broke as a result of the shock wave but the glass was not perforated.

6- FINISHING

- When the chip has disappeared, remove the tool holder, which is no longer needed.
- Fit:
  - a drop or two of finishing resin above the crater and put the plastic sheet or film over the repair (the quantity of resin will have to protrude slightly in order to take into account the effect of "contraction" at the time of polymerisation),
  - the UV lamp astride the repair on the windscreen after first applying gel to the suction cups.
- Drying time: as per supplier's instructions.
- Once polymerisation has finished, use a scraper blade to remove the surplus resin that is on the windscreen. Scratch at right angles to the glass surface until only what is needed is left.
- Fit the felt disc in the drill mandrel.
- Apply a little polish to the area where the repair has been done.
- Polish the repair without putting too much pressure on the window in order to obtain the right appearance.

7- WHEN AND HOW IS IT NECESSARY TO DRILL?

- In certain cases, despite the application of pressure to the resin, nothing happens.

It is then necessary to drill to access the inside of the chip.

- That means that the glass has broken internally under the effect of the shock wave, without the outer glass being damaged.

1)DRILLING

- Put the carbide drill bit on the drill.
- Drill in successive and brief operations in order to avoid the tool overheating.
- When the plastic film separating the two layers of glass is reached, stop drilling.
- Carry out the repair as described below.

2)REPAIR AFTER DRILLING

- If repairing a crack, drill at the end of the crack to prevent it from propagating.
- Inject the resin through this hole.

This will move up the crack by capillarity.

- Harden this part using the UV lamp.
- Position the injector holder so that the injector is located astride the slit, 5 cmaway from the end of the resin just injected.

By capillarity, the resin will distribute itself on either side of the injector.

- Harden this part, and continue progressively until the whole of the crack is repaired.

Note:

Only drill once at the end of the crack.

Repair-50x04-01x22-1-1-1.xml

XSL version : 3.02 du 22/07/11

WINDSCREEN: REMOVAL - REFITTING

Note, one or more warnings are present in this procedure

Equipment required
Diagnostic tool

WARNING

To avoid all risk of damage to the systems, apply the safety and cleanliness instructions and operation recommendations before carrying out any repair:

Vehicle: Precautions for the repair .

REMOVAL

1. REMOVAL PREPARATION OPERATION

WARNING

To avoid any risk of triggering when working on or near a pyrotechnic component (airbags or pretensioners), lock the airbag computer using the diagnostic tool.

When this function is activated, all the trigger lines are inhibited and the airbag warning light on the instrument panel lights up continuously (ignition on).

Lock the airbag computer using the Diagnostic tool(see Fault finding - Replacement of components) (88C, Airbags and pretensioners).

WARNING

DANGER : Risk of serious injuries due to the short-circuiting or the untimely triggering of an electrical system (pyrotechnical parts, windscreen wiper motor, electric fan, etc.) following possible loopback of the 12-volt supply circuit by the voltage transformer.

Please adhere to the instructions regarding cut-off of the 12-volt supply circuit.

If the procedure fails, do not continue with your task and ask an employee who is qualified and authorized to work on a high-voltage onboard network to perform a diagnostic Vehicle: Precautions for the repair .

- Disconnect the 12V supply circuit12 V supply circuit : Lockout - Removal of lockout .

- Remove the front bumper upper stripExterior body front trim assembly: Exploded view .

- Remove Exterior body side trim assembly: Exploded view :
  - the A-pillar trims,
  - the B-pillar trims,
  - the roof front section trims,
  - the winscreen side windows.

- Remove Wipers/washing assembly : Exploded view :
  - the windscreen wiper arm,
  - the scuttle panel grille.

Remove the dashboard Dashboard assembly: Exploded view .

Remove Roof trim assembly: Exploded view :

- the roof rear cross member trim,
- the roof front cross member trim,
- the windscreen pillar trims.

Disconnect the heater windscreen connectors.

Remove:

- the windscreen lower seal,
- the seal between the fixed glass roof and the windscreen.

Protect:

- the vehicle interior,
- the area around the windscreen with masking tape.

2. REMOVAL OPERATION

Cut the cement bead Window bonding tool: Use and Window detachment: Description .

CAUTION

When cutting the cement bead, take care not to cut the wiring harness.

REFITTING

1. REFITTING PREPARATION OPERATION

- Fit the new shims and retaining thrust bearings.
- For preparation and bonding Products for preparing and bonding windows: Description .

2. REFITTING OPERATION

- Bond the windscreen Window bonding: Description .

> Note:
>
> This operation requires two operators.

- Position the bottom of the windscreen into abutment on lower shims.
- Position the windscreen at the upper section using the lateral shims.
- Apply pressure to the periphery of the windscreen to ensure the crushing of the cement bead.

3. FINAL OPERATION

- Proceed in the reverse order to removal.
- Connect the 12V supply circuit 12 V supply circuit : Lockout - Removal of lockout .
- Unlock the airbag computer using the Diagnostic tool (see Fault finding - Replacement of components)

(88C, Airbags and pretensioners).

Repair-50x04x02-01x37-1-29-1.xml

XSL version : 3.02 du 22/07/11

TWIZY

8 Electrical equipment

85A WIPERS/WASHERS

UCH
VDiag No.: 08

Fault finding – Introduction	85A - 2
Fault finding – Role of components	85A - 10
Fault finding – Function	85A - 11
Fault finding – Configuration	85A - 12
Fault finding – Interpretation of faults	85A - 13
Fault finding – Conformity check	85A - 15
Fault finding – Interpretation of statuses	85A - 17
Fault finding – Customer complaints	85A - 22
Fault finding – Fault finding charts	85A - 23

V2 **Edition Anglaise**

"The repair procedures given by the manufacturer in this document are based on the technical specifications current when it was prepared.

The procedures may be modified as a result of changes introduced by the manufacturer in the production of the various component units and accessories from which his vehicles are constructed."

All rights reserved by Renault s.a.s.

Copying or translating, in part or in full, of this document or use of the service part reference numbering system is forbidden without the prior written authority of Renault s.a.s.

© Renault s.a.s. 2012

1. APPLICABILITY OF THE DOCUMENT

This document presents the fault finding procedure applicable to all computers with the following specifications:

Vehicle(s): **TWIZY**	*Computer name*: **UCH**
Function concerned: **WASHING - WIPING**	*Vdiag No.*: **08**

2. PREREQUISITES FOR FAULT FINDING

Documentation type

Fault finding procedures (this manual):
- Assisted fault finding (integrated into the **diagnostic tool)**, Dialogys.

Wiring Diagrams:
- Visu-Schéma.

Type of diagnostic tools
- **CLIP**

Special tooling required

Special tooling required:	
Diagnostic tool	
Multimeter	
Elé. 1622	Bornier
Elé. 1681	Universal bornier

If the information obtained by the diagnostic tool requires checking electrical continuity, connect bornier Elé. 1622 or universal bornier Elé. 1681.

IMPORTANT:
- All tests with bornier **Elé. 1622** or **Elé. 1681** must be conducted with the battery disconnected.
- The bornier is only designed to be used with a multimeter. Never power the test points with **12 V**.

3. SAFETY INSTRUCTIONS

The safety instructions must be followed at all times when working on components, to avoid damage or injury:
– make sure that the battery is properly charged to avoid damaging the computers with a low load,
– use the appropriate tools.

Procedure for disconnecting the battery:
– switch off the ignition;
– switch off all power consumers and wait for at least **1 minute** to allow the electronic systems to switch themselves off,

Faults

Faults are declared present or stored (depending on whether they appeared in a certain context and have disappeared since, or whether they remain present but are not diagnosed within the current context).

The **present** or **stored** status of faults should be taken into consideration when the **diagnostic tool** is used after the + after ignition feed (without activating the system components).

For a **present fault**, apply the procedure described in the Interpretation of faults section.
For a **stored fault**, note the faults displayed and apply the Notes section.

If the fault is **confirmed** when the instructions are applied, the fault is present. Deal with the fault.
If the fault is **not confirmed**, check:
the electrical connections that correspond to the fault,
the connectors for this connection,
the resistance of the faulty component,
the condition of the wires.
Refer to paragraph (1) Checking the wiring and (2) Checking the connectors

Conformity check

The aim of the conformity check is to check data which does not produce a fault on **the diagnostic tool** when the data is inconsistent. Therefore, this stage is used to:
carry out fault finding on faults that do not have a fault display, and which may correspond to a customer complaint, to ensure that the system is operating correctly and that there is no risk of a fault reappearing after repair.

This section gives the fault finding procedures for statuses and parameters and the conditions for checking them.

If a status is not behaving normally or a parameter is outside permitted tolerance values, you should consult the corresponding fault finding page.

Customer complaints - Fault finding chart

If the test with the **diagnostic tool** is correct but the customer complaint is still present, the fault should be dealt with by **Customer complaints.**

A summary of the overall procedure to follow is provided on the following page in the form of a flow chart.

4. FAULT FINDING PROCEDURE

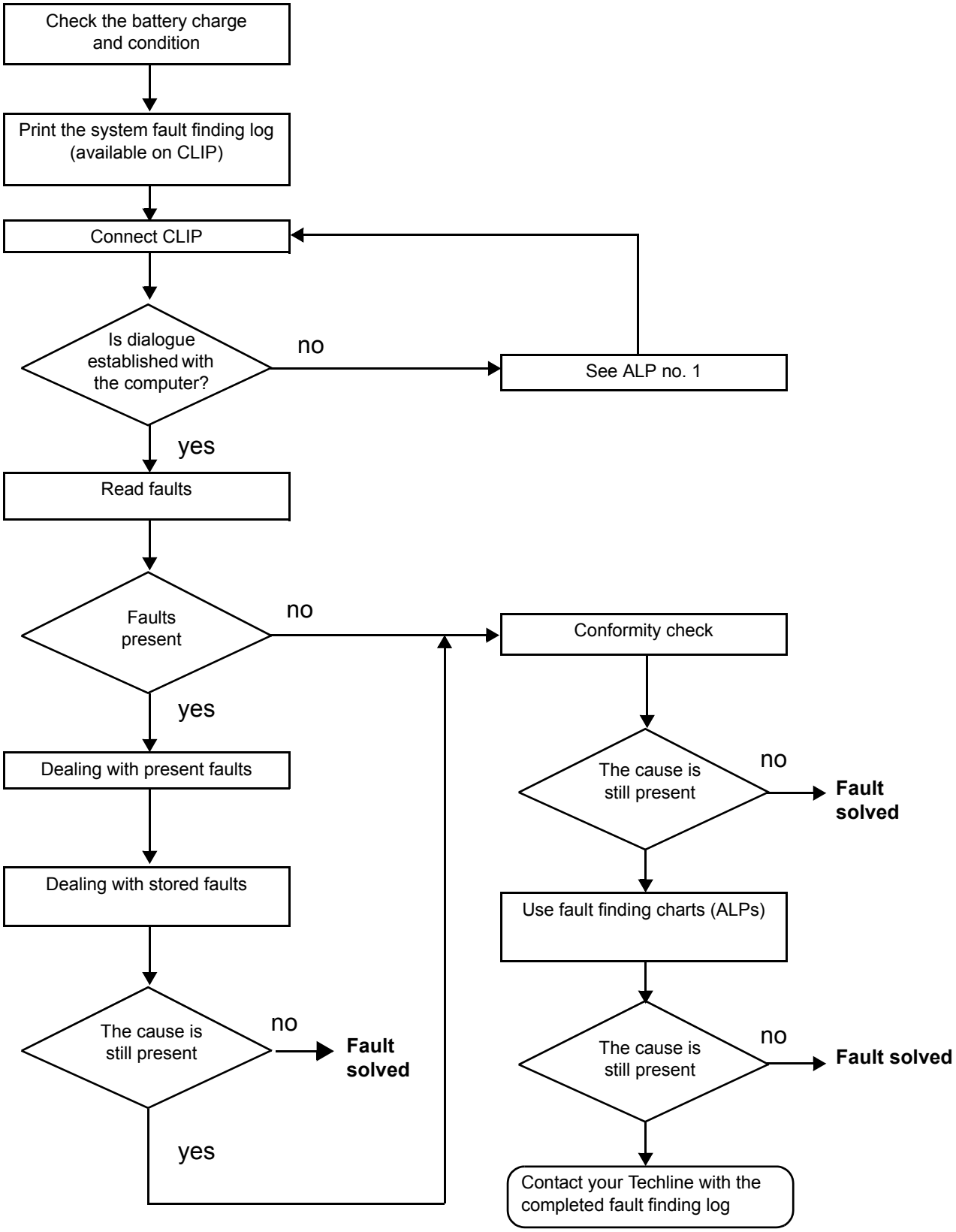

4. FAULT FINDING PROCEDURE (CONTINUED)

Wiring check

Fault finding problems
Disconnecting the connectors and/or manipulating the wiring may temporarily clear the cause of a fault.

Visual inspection
Look for damage under the bonnet and in the passenger compartment.
Carefully check the fuses, insulation, and routing of the wiring, as well as the mountings.

Tactile inspection
When manipulating the wiring, either use the **diagnostic tool** to detect a change in status, from "stored" to "present", or the multimeter to view the status changes.
Make sure that the connectors are firmly secured.
Apply light pressure to the connectors.
Twist the wiring harness.

Earth insulation check
This check is carried out by measuring the voltage (multimeter in voltmeter mode) between the suspect connection and the **12 V** or **5 V**. The correct measured value is **0 V.**

Checking insulation against + 12 V or + 5 V
This check is carried out by measuring the voltage (multimeter in voltmeter mode) between the suspect connection and the earth. In the first instance, the earth may be taken on the chassis. The correct measured value should be **0 V**

Continuity check
A continuity check is carried out by measuring the resistance (multimeter in ohmmeter mode), with the connectors disconnected at both ends. The expected result is **1** Ω **± 1** Ω for every connection. The line must be fully checked, and the intermediate connections are only included in the method if this saves time during the fault finding procedure. The continuity check on the multiplex lines must be carried out on both wires. The measured value should be **1** Ω **± 1** Ω.

Checking the supply
This check may be carried out using a test light (**21 W** or **5 W** depending on the maximum authorised load).

Connector check

Note:
Carry out each requested check visually. Do not remove a connector if it is not required.

Note:
Repeated connections and disconnections alter the functionality of the connectors and increase the risk of poor electrical contact. Limit the number of connections/disconnections as much as possible.

Note:
The check is carried out on the 2 parts of the connection. There may be two types of connection:
– Connector / Connector
– Connector / Device

4.1. Visual inspection of the connection:

– Check that the connector is connected correctly and that the male and female parts of the connection are correctly coupled.

4.2. Visual inspection of the area around the connection:

– Check the condition of the mounting (pin, strap, adhesive tape, etc.) if the connectors are attached to the vehicle.
– Check that there is no damage to the wiring trim (sheath, foam, adhesive tape, etc.) near the wiring.
– Check that there is no damage to the electrical wires at the connector outputs, in particular on the insulating material (wear, cuts, burns, etc.).

Disconnect the connector to continue the checks.

4.3. Visual inspection of the plastic casing:

– Check that there is no mechanical damage (casing crushed, cracked, broken, etc.), in particular to the fragile components (lever, lock, openings, etc.).
– Check that there is no heat damage (casing melted, darker, deformed, etc.).
– Check that there are no stains (grease, mud, liquid, etc.).

4.4. Visual inspection of the metal contacts:

(The female contact is called CLIP. The male contact is called TAB.)

- Check that there are no bent contacts (the contact is not inserted correctly and can come out of the back of the connector). The spring contact of the connector when the wire is gently pulled.
- Check that there is no damage (folded tabs, clips open too wide, blackened or melted contact, etc.).
- Check that there is no oxidation on the metal contacts.

4.5. Visual inspection of the sealing:

(Only for watertight connectors)

- Check for the seal on the connection (between the 2 parts of the connection).
- Check the seal at the back of the connectors:
  - *For unit* joints (1 for each wire), check that the unit joints are present on each electrical wire and that they are correctly positioned in the opening (level with the housing). Check that plugs are present on openings which are not used.
  - For a *grommet* seal (one seal which covers the entire internal surface of the connector), check that the seal is present.
  - For *gel* seals, check for gel in all of the openings without removing the excess or any protruding sections (it does not matter if there is gel on the contacts).
  - For *hotmelt* sealing (heat-shrink sheath with glue), check that the sheath has contracted correctly on the rear of the connectors and electrical wires, and that the hardened glue comes out of the side of the wire.
- Check that there is no damage to any of the seals (cuts, burns, significant deformation, etc.).

If a fault is detected, repair or replace the wiring (see **Technical Note 6015A, Repairing electrical wiring, Wiring: Precautions for repair**).

5. FAULT FINDING LOG

IMPORTANT!

WARNING
All faults involving a complex system call for thorough diagnostics with the appropriate tools. The FAULT FINDING LOG, which should be completed during the fault finding procedure, ensures a record is kept of the procedure carried out. It is an essential item when discussing the fault with the manufacturer.

IT IS THEREFORE MANDATORY TO FILL IN A FAULT FINDING LOG EACH TIME IT IS REQUESTED BY TECHLINE OR THE WARRANTY RETURNS DEPARTMENT.

You will always be asked for this log:
- when requesting technical assistance from the Techline,
- when requesting approval before replacing parts for which approval is compulsory,
- which must be attached to monitored parts for which reimbursement is requested. It is therefore used to decide whether a reimbursement will be made under warranty and leads to improved analysis of the removed parts.

WASHING - WIPING FUNCTION

1	UCH	4	Windscreen wiper motor
2	Passenger compartment fuse box	5	Washer pump
3	Combined wiper-washer		

Screen wiper motor:
The role of the screen wiper motor is to clean the windscreen.

Combined wiper-washer:
The role of the combined wash-wipe is to control the various wash-wipe functions.

Screen washer pump:
The role of the screen washer pump is to supply screen washer fluid to the windscreen.

UCH:
The UCH is used to manage all wiper functions (activation, wiper speed, etc).

Windscreen washing/wiping
The UCH receives the "intermittent wiper speed" and "windscreen wiper park" information.
This provides the following functions:
– intermittent wiper speed,
– extended wiper time after washing,
– return to park position.
In the park position, the switch is closed to earth, and the UCH receives logical information 0.

This function is only active if + after ignition is present.
When the + after ignition feed is switched on, if the windscreen wiper park position is not detected, the wiper motor relay is held.

Operation is interrupted in the following cases:
– wiper request stopped or no request,
– + after ignition switched off,
– UCH reads park information.

Detection of the park position should be made on transition and not on level, that is, if the wiper switch stalk is moved from the intermittent position to the park position while the wiper blade is in the park position and the wiper motor is running, it will not be stopped until the next reading of the park position. This condition is necessary in order to obtain an exact park position.

Intermittent facility
The intermittent wiper speed function is only active if the + after ignition is present and if the switch is in the intermittent position.
The time delay between two wipes is 5 seconds, and this cannot be modified by the diagnostic tool.

When the windscreen intermittent speed function is activated, the windscreen wiper speed relay is held by the UCH until the park position is detected. When the intermittent speed time delay has elapsed, the relay is held again and the cycle begins again.

Time delay of 10 minutes for windscreen demisting and de-icing

This output controls a diode relay external to the UCH, delivering the power to supply windscreen de-icing.

Activation of the de-icing time delay is provided by one rotation of the windscreen de-icing and demisting control at the end of the switch stalk.

Deactivation of the time delay for de-icing and demisting is done:
– by another rotation of the end of the switch stalk if the delay between activation and deactivation is less than 10 minutes.
– automatically if the time delay has elapsed,
– directly if there is a cut in the + after ignition or engine speed signal.

The minimum time delay between two presses of the button so that the command is taken into account, should not be less than 200 ms.

Equipment required:
CLIP diagnostic tool.

Wiper function configurations in the UCH

…Individual configuration available on the **diagnostic tool** with its associated configuration reading:

Configuration	Configuration reading	Name of configuration	Option	Configuration
CF069	LC116	Intermittent variation according to speed	WITH or WITHOUT	SC008 UCH type

DF097 PRESENT OR STORED	WINDSCREEN WIPER PARK POSITION CIRCUIT

NOTES	**Conditions for applying the fault finding procedure to stored faults:** The fault is declared present following operation of the windscreen wiper. Special notes: random operation of the wipers in intermittent speed position (time delay not respected).
	Special note: Use the **Wiring Diagrams Technical Note for Twizy**.

Check the connection and condition of the connectors of the UCH, component code **645,** of the windscreen wiper motor, component code **212** and of the combined wiper-washer, component code **145**. If the connectors are faulty and if there is a repair procedure (see **Renault Technical Note 6015A, Repairing electrical wiring, Wiring: Precautions for repair**), repair the connectors, otherwise replace the wiring.
Check that the windscreen wiper operates correctly in the intermittent wipe position and status **ET558** is **YES**. If the status is **NO**, refer to the interpretation of this status.
Otherwise check the **insulation, continuity** and the **absence of interference resistance** on the following connections: • **14C** between components **645** and **212**, • **14D** between components **645** and **145**, • **MB** between component **212** and **the earth**. If the connection or connections are faulty and if there is a repair procedure (see **Technical Note 6015A (Renault), Repairing electrical wiring, Wiring: Precautions for repair**), repair the wiring, otherwise replace the wiring.
Check that the windscreen wiper operates correctly in the low speed position using command **AC056**

AFTER REPAIR	Carry out another fault finding check on the system. Deal with any other faults. Clear the **stored** faults.

UCH_V08_DF097

DF097 CONTINUED	

Otherwise check the **insulation and continuity** of the following connections: • **14A** between components **212** and **145**, • **MB** between component **212** and **the earth**. If the connection or connections are faulty and if there is a repair procedure (see **Technical Note 6015A (Renault), Repairing electrical wiring, Wiring: Precautions for repair**), repair the wiring, otherwise replace the wiring.
Check for **+12 V** (when the low speed combined wiper-washer is requested) on connection **14A** of the combined wiper-washer, component code **145**. If the connection is faulty and if there is a repair procedure (see **Renault Technical Note 6015A, Repairing electrical wiring, Wiring: Precautions for repair**), repair the wiring, otherwise replace the wiring.
Otherwise, replace the combined wiper-washer, component code **145** (see **MR 454 Mechanical, 84A, Wiper switch: Removal - Refitting**).
Check the operation and fitting of the windscreen wiper motor, component code **212**. The windscreen wiper motor may need to be replaced (see **MR 454 Mechanical, 85A, Wiping - Washing, Windscreen wiper motor: Removal - Refitting**).
If the fault is still present, contact Techline.

AFTER REPAIR	Carry out another fault finding check on the system. Deal with any other faults. Clear the **stored** faults.

NOTES	Only perform this conformity check after a complete check with the **diagnostic tool**. The values shown in this conformity check are given as examples. Test conditions: **Engine stopped, ignition on**.

SUB-FUNCTION: WIPER CONTROL

Function	Parameter or state checked or action		Display and notes	Fault finding
Windscreen wiper	**ET004**	**+ 12 V** after ignition	**YES** **NO**	**In the event of a fault**, consult the interpretation of status **ET004**.
	ET027:	Windscreen wiper park position	When the wiper control is in the intermittent position, the status is **ACTIVE** during the park phases of the wiper and **INACTIVE** during the wiping phases	**In the event of a fault**, apply the interpretation of the fault **DF097 Windscreen wiper park position**.
	ET558:	Windscreen wiper speed setting selection	**YES** when the wiper control is in the intermittent position. **NO** when the wiper control is in position 0 or low speed or high speed	**In the event of a fault**, apply the interpretation of status **ET558**.

NOTES	Only perform this conformity check after a complete check with the **diagnostic tool**. The values shown in this conformity check are given as examples. Test conditions: **Engine stopped, ignition on**.

SUBFUNCTION: WIPER CONTROL (CONTINUED)

Function	Parameter or state checked or action	Display and notes	Fault finding
Windscreen wiper	**PR001:** Battery voltage	**12 V < X < 12.5 V**	**In the event of a fault**, run fault finding on the charging circuit (see **Technical Note 6014A**, **Checking the charging circuit**).
	AC056 Low-speed wiper	This command activates the low speed wiper.	**In the event of a fault**, apply the interpretation of the fault **DF097 Windscreen wiper park position**.

ET004 PRESENT OR STORED	+ 12 VOLTS AFTER IGNITION

NOTES	**Special note:** Use the **Wiring Diagrams Technical Note for Twizy**.

ET004: "NO" with the ignition on

Check fuse **F06 (15 A)** of the passenger compartment fuse box, component code **1016** (see **MR 454 Mechanical, 81C, Fuses, Fuses: List and location of components**).
Using a multimeter, check for **+ 12 V** after ignition on connection **AP10** of the UCH connector, component code **645**.
Using a multimeter, check for **+12 V** on connection **BP56** of the UCH connector
component code **645**.
If any of the connections are faulty, and if there is a repair procedure (see **Technical Note 6015A, Electrical wiring repair, Wiring: Precautions for repair**), repair the wiring, otherwise replace the wiring.

If there is no voltage, check **the continuity** and the **insulation** to **earth** on the following connection:
- **AP10** between components **645** and **1016**.

If the connection is faulty and there is a repair procedure (see **Technical Note 6015A, Electrical wiring repair, Wiring: Precautions for repair**), repair the wiring, otherwise replace the wiring.

AFTER REPAIR	Carry out another fault finding check on the system. Deal with any other faults. Clear the **stored** faults.

UCH_V08_ET004

ET004 CONTINUED	

ET004: "YES" with the ignition off

Using a multimeter, check that there is no **+12 V** with the ignition off on connection **AP10** of the UCH connector, component code **645**. If the voltage is present, check the insulation to +12 V on the following connection: • **AP10** between components **645** and **1016**. If the connection is faulty and there is a repair procedure (see **Technical Note 6015A, Electrical wiring repair, Wiring: Precautions for repair**), repair the wiring, otherwise replace the wiring
If the fault is still present, contact the Techline.

AFTER REPAIR	Carry out another fault finding check on the system. Deal with any other faults. Clear the **stored** faults.

ET558 PRESENT OR STORED	WINDSCREEN WIPER SPEED SETTING SELECTION

NOTES	There must be no **present** or **stored** faults. Switch on the ignition.
	Special note: Use the **Wiring Diagrams Technical Note for Twizy**.

ET558 "NO" with the control stalk in the intermittent position	Check the presence and condition of fuse F12 (20 A) in the passenger compartment fuse box, component code **1016** (see **MR 454 Mechanical, 81C, Fuses, Fuses: List and location of components**).
	Check the connection and condition of the combined wiper-washer connector, component code **145** and check the UCH connector, component code **645**. If the connectors are faulty and if there is a repair procedure (see **Technical Note 6015A (Renault), Repairing electrical wiring, Wiring: Precautions for repair**), repair the connectors, otherwise replace the wiring.
	Check for **+12 V** after ignition feed on connection **AP8** of component **145**, If the connection or connections are faulty and if there is a repair procedure (see **Technical Note 6015A (Renault), Repairing electrical wiring, Wiring: Precautions for repair**), repair the wiring, otherwise replace it.

AFTER REPAIR	Carry out another fault finding check on the system. Deal with any other faults. Clear the **stored** faults.

ET558 CONTINUED 1	
ET558 "NO" with the control stalk in the intermittent position	Ensure the continuity and the insulation of the following connection: • **AP8** between components **145** and **1016**. If the connection or connections are faulty and if there is a repair procedure (see **Technical Note 6015A (Renault), Repairing electrical wiring, Wiring: Precautions for repair**), repair the wiring, otherwise replace it.
	Check for +12 V (when the intermittent speed combined wiper-washer is requested) on connection **14E** of component **645**. If the connection is faulty and if there is a repair procedure (see **Technical Note 6015A (Renault), Repairing electrical wiring, Wiring: Precautions for repair**), repair the wiring, otherwise replace the wiring.
	Check the continuity and insulation to earth of the following connection: • **14E** between components **645** and **145**, If the connection or connections are faulty and if there is a repair procedure (see **Technical Note 6015A (Renault), Repairing electrical wiring, Wiring: Precautions for repair**), repair the wiring, otherwise replace it.
	Check for +12 V (when the intermittent speed combined wiper-washer is requested) on connection **14E** of component **145**. Otherwise, replace the combined wiper-washer, component code **145** (see **MR 454 Mechanical, 84A, Wiper switch: Removal - Refitting**).
	If the fault is still present, contact the Techline.

AFTER REPAIR	Carry out another fault finding check on the system. Deal with any other faults. Clear the **stored** faults.

ET558 CONTINUED 2	
ET558 "YES" with the control stalk in the intermittent position	Check the connection and condition of the combined wiper-washer connector, component code **145** and check the UCH connector, component code **645**. If the connectors are faulty and if there is a repair procedure (see **Technical Note 6015A (Renault), Repairing electrical wiring, Wiring: Precautions for repair**), repair the connectors, otherwise replace the wiring.
	With the wiper switch in the rest position, check the insulation to +12 V of the following connection: • **14E** between components **645** and **145** If the connection is faulty and if there is a repair procedure (see **Technical Note 6015A (Renault), Repairing electrical wiring, Wiring: Precautions for repair**), repair the wiring, otherwise replace the wiring.
	If the fault is still present, contact the Techline.

AFTER REPAIR	Carry out another fault finding check on the system. Deal with any other faults. Clear the **stored** faults.

NOTES	**Only refer to these customer complaints after carrying out a complete check with the diagnostic tool**

WIPERS/WASHERS

The windscreen wiper does not work at high speed	**ALP 16**
The screen washer pump does not operate when its control is activated	**ALP 18**

ALP 16	The windscreen wiper does not work at high speed

NOTES	
	Only consult this customer complaint after carrying out a complete check with the diagnostic tool. There must be no **present** or **stored** faults.
	Special note: Use the **Wiring Diagrams Technical Note for Twizy**.

Check the presence and condition of fuse F12 (20 A) in the passenger compartment fuse box, component code **1016** (see **MR 454 Mechanical, 81C, Fuses, Fuses: List and location of components**).
Check the connection and condition of the connectors of the wiper stalk, component code **145** and of the windscreen wiper motor, component code **212**. If the connectors are faulty and if there is a repair procedure (see **Renault Technical Note 6015A, Repairing electrical wiring, Wiring: Precautions for repair**), repair the connectors, otherwise replace the wiring.
Check the **+12 V after ignition supply** on connection **AP8** of the control stalk, component code **145**. If the connection is faulty and if there is a repair procedure (see **Renault Technical Note 6015A, Repairing electrical wiring, Wiring: Precautions for repair**), repair the wiring, otherwise replace the wiring.
Check for **+12 V** (when the high speed combined wiper-washer is requested) on the following connection: • **14B** of component **212**, Check for **earth** on the following connection: • **MB** of component **212**. If the connection or connections are faulty and if there is a repair procedure (see **Technical Note 6015A (Renault), Repairing electrical wiring, Wiring: Precautions for repair**), repair the wiring, otherwise replace the wiring.

AFTER REPAIR	Carry out another fault finding check on the system. Deal with any other faults. Clear the **stored** faults.

UCH_V08_ALP16

ALP 16 CONTINUED	

Check the **insulation** of the following connection: • **14B** between components **145** and **212**, If the connection or connections are faulty and if there is a repair procedure (see **Technical Note 6015A (Renault), Repairing electrical wiring, Wiring: Precautions for repair**), repair the wiring, otherwise replace the wiring. Check that the motor operates correctly.
Check the operation of the wiper control. Check for **+12 V** (when the high speed combined wiper-washer is requested) on connection **14B** of component **145**. Otherwise, replace the combined wiper-washer, component code **145** (see **MR 454 Mechanical, 84A, Wiper switch: Removal - Refitting**).
Check that the wiper mechanism or motor are not jammed.
If the fault is still present, contact the Techline.

AFTER REPAIR	Carry out another fault finding check on the system. Deal with any other faults. Clear the **stored** faults.

ALP 18	**The screen washer pump does not operate when its control is activated**

NOTES	**Only consult this customer complaint after carrying out a complete check with the diagnostic tool.** There must be no **present** or **stored** faults.
	Special note: Use the **Wiring Diagrams Technical Note for Twizy**.

Check the presence and condition of fuse F10 (10 A) in the passenger compartment fuse box, component code **1016** (see **MR 454 Mechanical, 81C, Fuses, Fuses: List and location of components**).
Check the connection and condition of the connectors of the screen washer pump, component code **221** and of the wiper stalk, component code **145**. If the connectors are faulty and if there is a repair procedure (see **Renault Technical Note 6015A, Repairing electrical wiring, Wiring: Precautions for repair**), repair the connectors, otherwise replace the wiring.
Check for **+ 12 V after ignition feed** on the following connection: • **AP1** of component **145**, Check for **earth** on the following connection: • **MAM** of component **145,** If the connection or connections are faulty and if there is a repair procedure (see **Technical Note 6015A (Renault), Repairing electrical wiring, Wiring: Precautions for repair**), repair the wiring, otherwise replace the wiring.

AFTER REPAIR	Carry out another fault finding check on the system. Deal with any other faults. Clear the **stored** faults.

ALP 18 CONTINUED 1	

Check the **insulation** of the following connection:
- **AP1** between components **1016** and **145**,

If the connection or connections are faulty and if there is a repair procedure (see **Technical Note 6015A (Renault), Repairing electrical wiring, Wiring: Precautions for repair**), repair the wiring, otherwise replace the wiring.

Check for **+12 V** (when the windscreen washer is requested) on the following connection:
- **16A** of component 221,

If the connection or connections are faulty and if there is a repair procedure (see **Technical Note 6015A (Renault), Repairing electrical wiring, Wiring: Precautions for repair**), repair the wiring, otherwise replace the wiring.

Check the **insulation** of the following connection:
- **16A** between components **221** and **145**,

If the connection or connections are faulty and if there is a repair procedure (see **Technical Note 6015A (Renault), Repairing electrical wiring, Wiring: Precautions for repair**), repair the wiring, otherwise replace the wiring.

AFTER REPAIR	Carry out another fault finding check on the system. Deal with any other faults. Clear the **stored** faults.

ALP 18 CONTINUED 2	

Check for **+12 V** (when the windscreen washer is requested) on the following connection: • **16A** of component 145, Otherwise, replace the combined wiper-washer, component code **145** (see **MR 454 Mechanical, 84A, Wiper switch: Removal - Refitting**).
Check the operation and fitting of the windscreen washer pump. If the pump is not correct, replace it (see **MR 454 Mechanical, 85A, Wiping – Washing, Windscreen washer pump: Removal - Refitting**).
If the fault is still present, contact the Techline.

AFTER REPAIR	Carry out another fault finding check on the system. Deal with any other faults. Clear the **stored** faults.

WIPERS/WASHING ASSEMBLY : EXPLODED VIEW

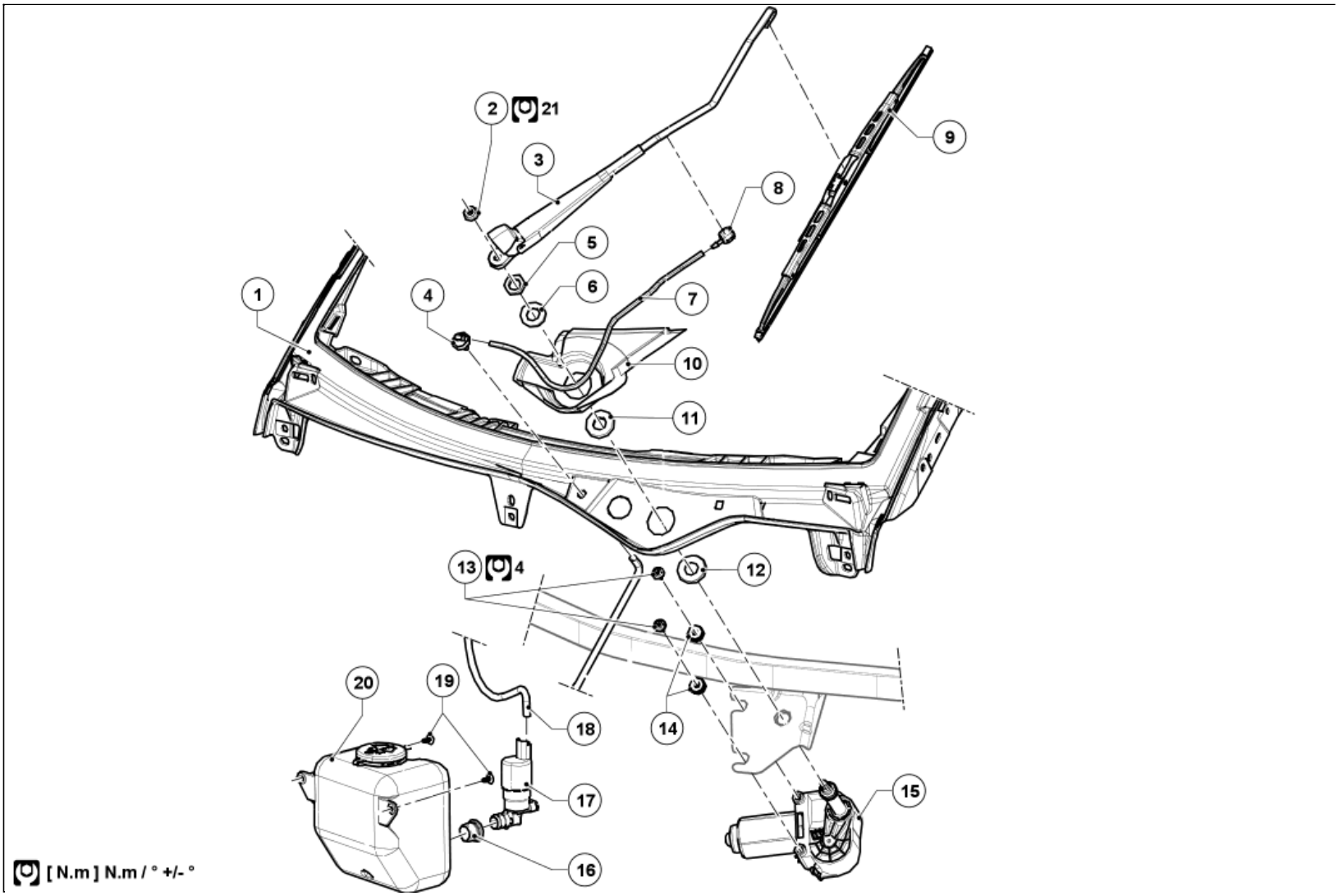

Illustration key: Description .

For fastenings with no specified tightening torque values, refer to the Table of Standard TorquesTightening torques: General information .

Marks	Designations	Informations
1	Roof panel arch	Roof panel arch: Removal - Refitting
2	Windscreen wiper arm nut	
3	Windscreen wiper arm	
4	Hoses union	
5	Windscreen wiper motor shaft nut	
6	Washer	
7	Windscreen washer hose, jet inlet	
8	Windscreen washer jet	
9	Wiper blade	
10	Scuttle panel grille	
11	Scuttle panel grille sealing ring	
12	Motor shaft mounting washer	
13	Windscreen wiper motor screws	
14	Windscreen wiper motor mounting washers	
15	Windscreen wiper motor	(see 85A, Wiping - Washing, Windscreen wiper motor: Removal - Refitting)
16	Windscreen washer pump seal	
17	Windscreen washer pump	
18	Windscreen washer hose, pump outlet	
19	Windscreen washer bottle screws	
20	Windscreen washer bottle	

RENAULT

Technical Note 6015A

All types

Sub-sections concerned: 88A - 88B - 88C

ELECTRICAL WIRING REPAIR

77 11 332 302 **Edition 7 - AUGUST 2011** **Edition Anglaise**

"The repair procedures given by the manufacturer in this document are based on the technical specifications current when it was prepared.

The procedures may be modified as a result of changes introduced by the manufacturer in the production of the various component units and accessories from which his vehicles are constructed."

All rights reserved by RENAULT s.a.s.

Copying or translating, in part or in full, of this document or use of the service part reference numbering system is prohibited without the prior written authority of RENAULT s.a.s..

© Renault s.a.s. 2011

ELECTRICAL WIRING REPAIR

Contents

Page

88A **WIRING**

Wiring: Precautions for repair 88A-1
Wiring repair kit: General information 88A-8
Wiring repair kit: Description 88A-9
Wiring repair kit: Use 88A-12
Wiring: Repair 88A-18
Wiring: Check 88A-27
Connector: Repair 88A-30
Connector: Sealing and immobilisation 88A-34
Connector: Check 88A-36

88B

MULTIPLEXING

Multiplex network: Repair 88B-1

88C

AIRBAGS AND PRETENSIONERS

Airbag and pretensioner wiring:
Repair 88C-1

WARNING
This note authorises the repair of electrical wiring in very specific cases only and under certain conditions.
Check that the repair in question is authorised and that the repair conditions are respected.

1 - Result of the fault finding procedure.

Note:
During repair, check that you have the most recently updated version of the technical note.

A preliminary fault finding procedure has enabled a wiring fault to be identified. Follow the investigation procedure below.

Disconnect the battery (see the **MR corresponding to the vehicle, 80A, Battery, Battery: Removal - Refitting**).

Remove the components necessary to access the area to be worked on. The operation area must allow the pliers and the heat gun to be used, without blocking visibility.

WARNING
If the damaged section is not sufficiently accessible, remove the wiring concerned and repair on the bench.

When the damaged section is sufficiently accessible, detach the wires to be repaired from the main wiring.

WARNING
Check if there is a sensitive line. These cases are listed in the specific procedures reference table in this section.
If there is a sensitive line, replace the defective wiring or apply the specific procedure, if one exists. These procedures are indicated in the specific procedures reference table in this section.

Check that the fault is located more than 10 cm from the connector.

WARNING
If the damaged section is located less than 10 cm from the connector, replace the defective wiring, unless a wiring-connector kit (connector with wires) exists. In this case, use the kit to replace the damaged section and the connector.

This note does not authorise operations directly on the connectors and electrical contacts. Only wiring-connector kits allow the replacement of a connector. These kits can have associated procedures.

Note:
To check whether there is a wiring-connector kit, consult DIALOGYS. These kits are generally linked to specific wiring or function diagrams.

Note:
If the fault is located at the electrical contact (in the connector) and if it is linked to a corrosion or heating fault, replace the wiring or fit the wiring-connector kit. Also check the connector complement.

Note:
In all cases, pay particular attention to supply and earth lines and their tightening (refer to the tightening torques in the MRs concerned).

After having carried out these checks (outlined in the **Summary flowchart of the operating procedure**), if the repair is authorised, and it does not require a specific procedure, carry out the generic procedure (see **Wiring: Repair**).

Note:
If you have been referred to this note by a MR, NT or removal-refitting procedure, apply the repair procedure adapted to the case in question.
Either the generic repair procedure (see **Wiring: Repair**), or a specific procedure listed in the specific procedures reference table in this section.

2 - Specific procedures reference table.

- **Guidelines for reading the tables below:**

  – If not otherwise stated, consider all components or electrical connections to have a link with the functions or equipment listed. For example: For the electric power assisted steering, the function is not specified. It is prohibited to carry out operations on any wire attached to the electric power assisted steering.

  – If one case can be found in both tables, give priority to the **Changing the wiring**, recommendations, and then to those for the specific cases:
    - Example 1: For a 22-track airbag connector where more than 10 wires are damaged, the specific cases refer you back to the airbag and pretensioner repair procedure, and the general cases recommend that the wiring is replaced (as there are more than 10 wires involved). Priority is given to **Changing the wiring**.
    - Example 2: For an operation on a pair of twisted wires (general case) for the airbag function (specific case), the specific case refers back to the repair procedure for Airbags and pretensioners, and the general cases refer back to the repair procedure for multiplex lines. Priority is given to the airbag and pretensioner repair procedure. The recommendations for the specific cases take precedent over the general cases.

● **General cases:**

Functions or equipment	Precisions	Instructions
Wiring harness	Number of damaged wires 10 or fewer	(see **Wiring: Repair**)
	Number of damaged wires more than 10	Change the wiring
Equipment and predispositions specific to commercial vehicles and conversions	/	Change the wiring
Electric vehicles	Wiring and power connectors	Change the wiring
Connections or associated components	/	(see **Connector: Repair**)
Splices	Splice with more than 3 wires	Change the wiring
	3-wire splice which does not need sealing	(see **Wiring: Repair**)
	Splice with 3 wires or more, which needs sealing (engine and underbody areas and damp areas of the doors and boot)	Change the wiring
Wires outside the loom	Sheathed wires	Change the wiring
	Shielded wires	Change the wiring
	Twisted wires	**If the wire cross-sections are 0.5 mm^2:** (see **Multiplex network: Repair**)
	Flat cable	Change the wiring
	Wires with specific thermal protection	Change the wiring
	Copper wires with cross-section less than 0.35 mm^2	Change the wiring
	Copper wires with cross-section greater than 6 mm^2	Change the wiring
	Damaged wires less than 10 cm from the connector	(see **88A, Wiring, Connector: Repair**)

● **Specific cases:**

Lines	Device	Instructions
4-wheel steering	/	Change the wiring
ABS	Other ABS lines	Change the wiring
ABS	ABS sensor	Change the wiring
Airbag	Other airbag lines	(see **Airbag and pretensioner wiring: Repair**)
Airbag	Airbag sensor	(see **Airbag and pretensioner wiring: Repair**)
Airbag	Airbag computer connector	(see **Airbag and pretensioner wiring: Repair**)
Airbag	Pretensioner (squib) connector	(see **Airbag and pretensioner wiring: Repair**)
Airbag	Under seat connector	(see **Airbag and pretensioner wiring: Repair**)
Airbag	Airbag trigger connectors (pyrotechnic lines)	(see **Airbag and pretensioner wiring: Repair**)
Preheating unit (Diesel)	Heater plug	Change the wiring
Injection computer (Petrol)	Petrol vapour absorber	Change the wiring
Injection computer	Variable camshaft	Change the wiring
Injection computer	Variable inlet camshaft	Change the wiring
Injection computer	Variable exhaust camshaft	Change the wiring
Injection computer (Petrol)	Pencil coil	Change the wiring
Injection computer (Petrol and Diesel)	Motorised throttle body	Change the wiring
Injection computer	Camshaft sensor	Change the wiring
Injection computer (Petrol and Diesel)	Inlet camshaft sensor	Change the wiring
Injection computer (Petrol and Diesel)	Exhaust camshaft sensor	Change the wiring
Injection computer	Camshaft sensor, row A, B	Change the wiring
Injection computer	Variable exhaust camshaft sensor	Change the wiring
Injection computer (Petrol and Diesel)	Pinking sensor	Change the wiring
Injection computer (Diesel)	Turbine upstream pressure sensor	Change the wiring

● **Specific cases (cont. 1):**

Lines	Device	Instructions
Injection computer (Petrol)	Manifold pressure sensor	Change the wiring
Injection computer (Diesel)	Particle filter differential pressure sensor	Change the wiring
Injection computer (Diesel)	Rail pressure sensor	Change the wiring
Injection computer (Petrol and Diesel)	Turbocharging pressure sensor	Change the wiring
Injection computer	Accelerator pedal sensor	Change the wiring, except for the connector on KANGOO (see **Connector: Repair**)
Injection computer (Petrol and Diesel)	TDC sensor	**See OTS***
Injection computer (Diesel)	Particle filter (downstream) output sensor	Change the wiring
Injection computer (Petrol and Diesel)	Air temperature sensor	Change the wiring
Injection computer (Petrol)	Turbine upstream temperature sensor	Change the wiring
Injection computer (Diesel)	Fuel temperature sensor	Change the wiring
Injection computer (Petrol and Diesel)	Coolant temperature sensor	Change the wiring
Injection computer (Diesel)	Particle filter inlet temperature sensor (upstream)	Change the wiring
Injection computer (Diesel)	Injection air flowmeter	Change the wiring
Injection computer	Camshaft shift, row A, B	Change the wiring
Injection computer (Diesel)	Turbocharger control solenoid valve	Change the wiring
Injection computer (Diesel)	Damper solenoid valve	Change the wiring
Injection computer (Petrol and Diesel)	Injectors	Change the wiring
Injection computer (Diesel)	Diesel heater	Change the wiring
Injection computer (Diesel)	Water in diesel sensor	Change the wiring

*OTS: Special Technical Operation

● **Specific cases (cont. 2):**

Lines	Device	Instructions
Injection computer (Diesel/particle filter)	Oil level and temperature sensor	Change the wiring
Injection computer (Diesel)	Nitrogen oxide (Nox)	Change the wiring
Injection computer (Petrol and Diesel)	Upstream oxygen sensor	Change the wiring
Injection computer (Petrol and Diesel)	Downstream oxygen sensor	Change the wiring
Injection computer (Diesel)	Proportional oxygen sensor	Change the wiring
Injection computer (Diesel)	EGR valve	Change the wiring
Injection computer (Diesel)	Heater plug	Change the wiring
EPAS	/	Change the wiring
ETC (4x4 torque distributor)	/	Change the wiring
GMV	GMV	Change the wiring
Multiplex network	CAN	(See Multiplex network: Repair)
UPC (Petrol and diesel)	Air conditioning compressor	Change the wiring
UPC (Petrol)	Oil level sensor	Change the wiring

3 - Summary flowchart of the operating procedure defined in this section.

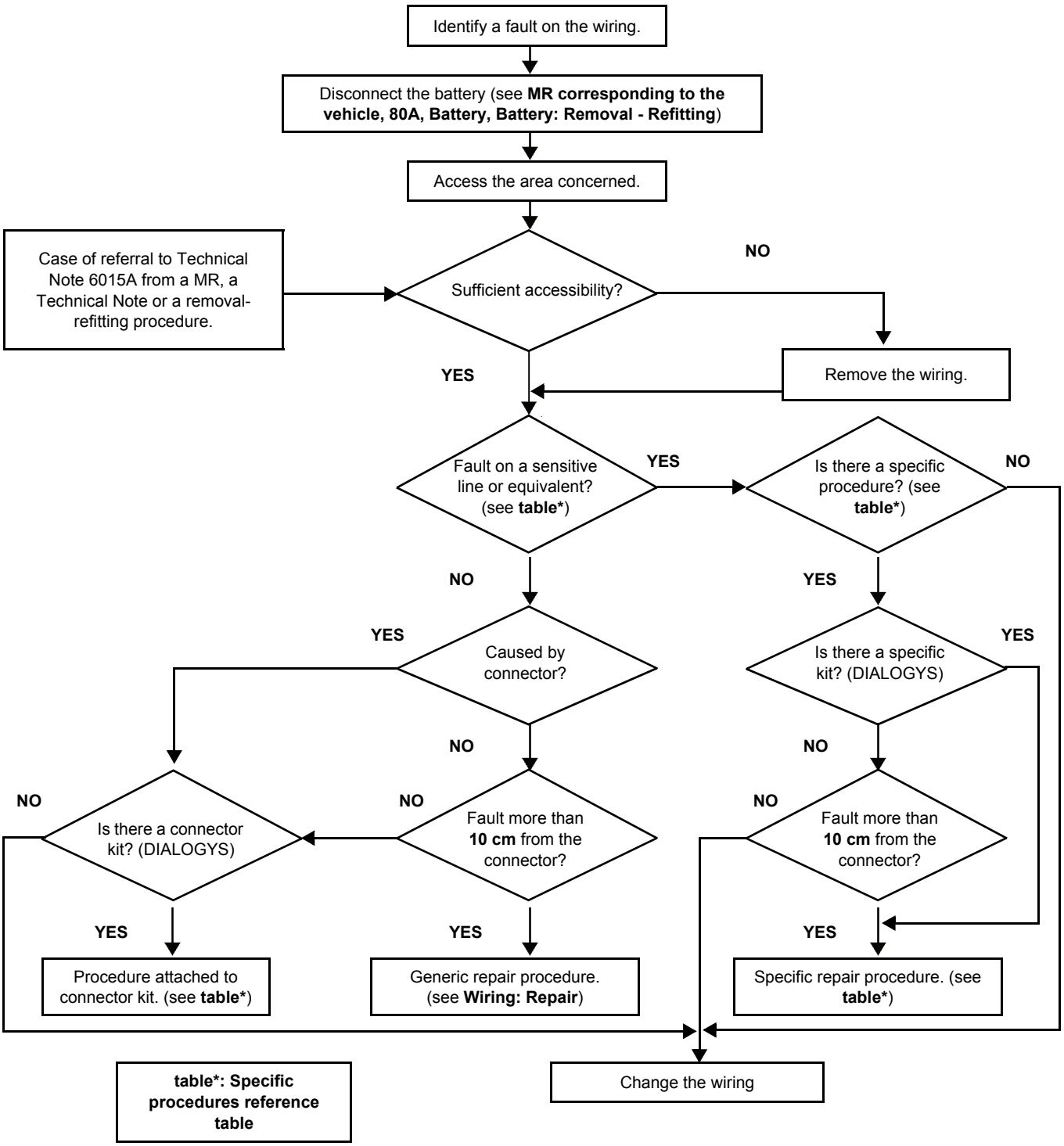

1 - Purpose and applications.

Description of the content of the Wiring repair kit case as well as the procedure and the field of application.

The kit enables wiring which is damaged or has cut electrical wires to be repaired whilst ensuring that it will be fully functional.

It also allows wiring-connector kits to be used.

All electrical cables and wires with cross-sections between **0.35 mm^2** and **6 mm^2** except "sensitive lines" (defined in this document), are affected.

WARNING
Repair of sensitive lines is prohibited using the generic procedure alone. It can be authorised provided that there is an additional appropriate procedure (see **Wiring: Precautions for repair**).

The technical nature and the sensitivity of this type of operation requires the adapted equipment contained and described in the Wiring repair kit case.

WARNING
Using tools or components which have not been recommended is strictly forbidden when repairing wiring.

WARNING
For sensitive lines, only automotive electricians, technician agents or cotechs (Level 2 Electricity as a minimum) can carry out the repair described in this note.

2 - Terminology.

● **Wiring-connector kit.**
Kit usually made up of a connector the cells of which are populated with crimped wires along with sleeves for joining.

● **Multiplex lines or connections.**
Principal or secondary CAN network lines link the computers together and are made up of twisted pairs of stranded wires.

● **Turns or twists.**
For twisted pairs:
One turn (twist) = (**A**)

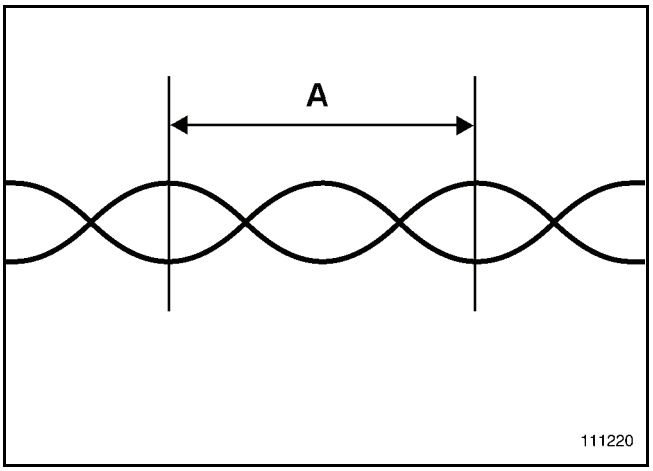

3 - Operation time (TM).

For each vehicle, an average repair time is given in the wiring section of the TM.

The corresponding codes are:
– **0500** for replacing a connector (using a connector kit).
– **0501** for repairing wiring.

This times do not include the time taken to access the area to be repaired. The time taken to remove and refit the wiring must be added.

1 - Case and label.

● **Case (77 11 420 544).**

Part no. 77 11 420 544 corresponds to the new electrical repair case. It replaces case part no. 77 11 229 893.
Both part numbers are authorised for electrical repair.

The case contains all the components described in this section. A label lists their part numbers.

● **Label.**

The label affixed inside the case is made up of 4 sections in English and French.

On the upper section, at (**A**) is the title and number of the note. At (**B**) are the After-Sales references (for the network) and MABEC code (for factories) which enables the kit to be restocked with consumables or new tools or a new kit to be ordered.

On the lower section, at (**C**) is a table (not exhaustive) which helps the right sleeve to be chosen, with a summary of the recommendations for each case. And at (**D**) are the recommendations for use.

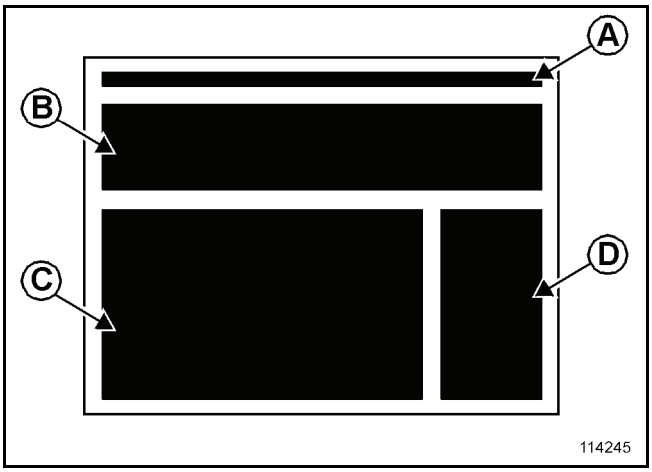

2 - Tools.

● **Stripping pliers (77 11 230 416).**

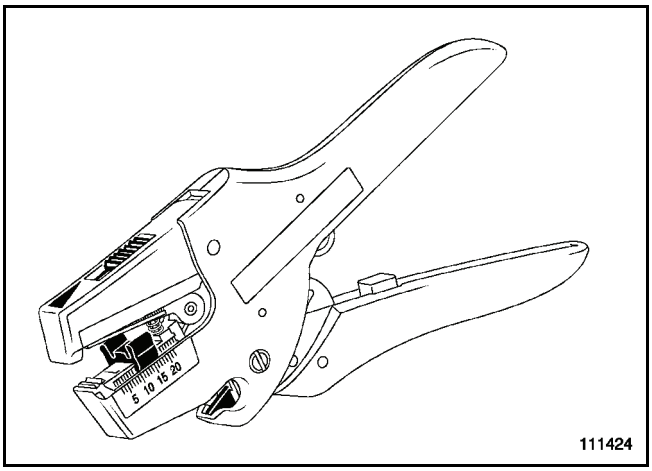

These are automatic stripping pliers which enable an electrical conductor up to a maximum cross-section of **6 mm^2** to be cut or stripped.
The length of the stripped section can be adjusted up to **20 mm**.

The operating instructions for this kit are described in this document (see **Wiring repair kit: Use**).

● **Crimping pliers (77 11 421 296).**

Part no. 77 11 421 296 corresponds to the new crimping pliers in the electrical repair kit. It replaces the crimping pliers with part no. 77 11 230 417.
Both part numbers are authorised for electrical repair.

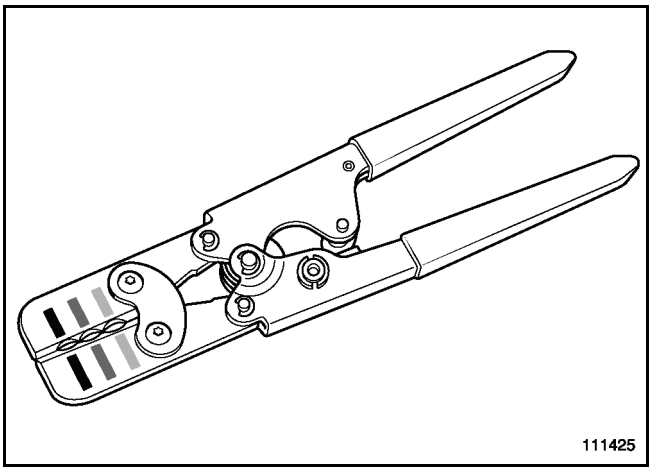

The crimping pliers have three sizes of jaw (red, blue and yellow) which correspond to the crimping sleeves. These pliers are recommended for the crimping the sleeves provided in the kit.

The operating instructions for this kit are described in this document (see **Wiring repair kit: Use**).

● **Heat gun (77 11 230 415).**

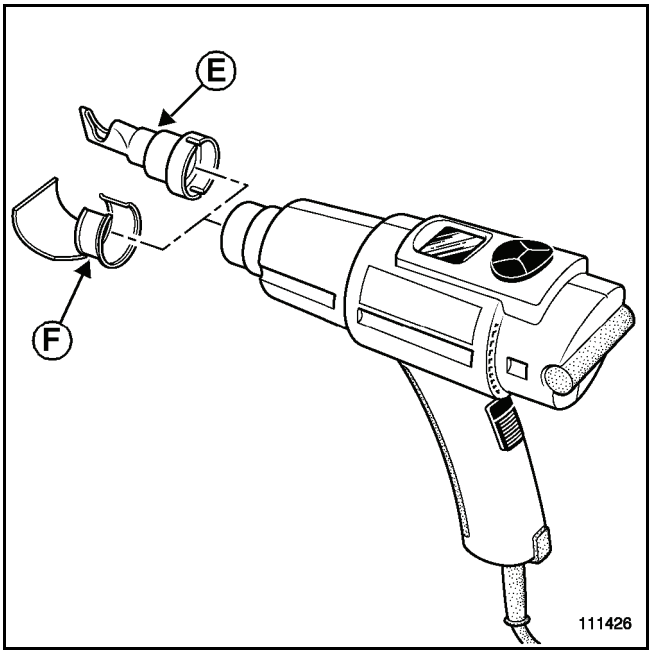

The heat gun is a hot air blower with 2 nozzles which enable it to be adapted for different needs:
- Concentrator nozzle **(E), (77 11 237 778)**.
- Heat shield nozzle **(F), (77 11 237 777)**.

It can be used to solder all self-solder sleeves and to contract the heat-shrinkable parts and sheaths on all sleeves
Its temperature and flow of air are adjustable and are indicated on the screen.
Temperature adjustment from **80°C** to **650°C** in increments of **5°C**.
Air flow adjustment from **200 l/min** to **550 l/min** at 5 levels displayed on the screen.

The operating instructions for this kit are described in this document (see **Wiring repair kit: Use**).

3 - Consumables.

● **Self-solder sleeves.**

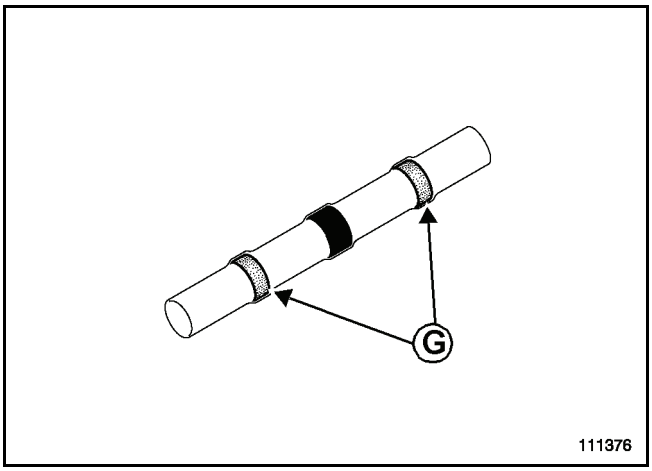

There are three sizes of heat shrinkable self-solder sleeve differentiated by the colour of their rings (**G**):

- **Clear,** for a total copper section (sum of the 2 wires) between **0.3** and **0.8 mm^2** (packet of 20: **77 11 229 418**).

- **Red,** for a total copper section (sum of the 2 wires) between **0.8** and **2.0 mm^2** (packet of 20: **77 11 229 419**).

- **Blue,** for a total copper section (sum of the 2 wires) between **2.0** and **4.0 mm^2**(packet of 20: **77 11 229 420**).

These are sealing sleeves. The seal is formed when the rings are tightened around the wire when heated.

These sleeves are only to be used for connecting one wire with another wire (1-to-1).

● **Crimping sleeve.**

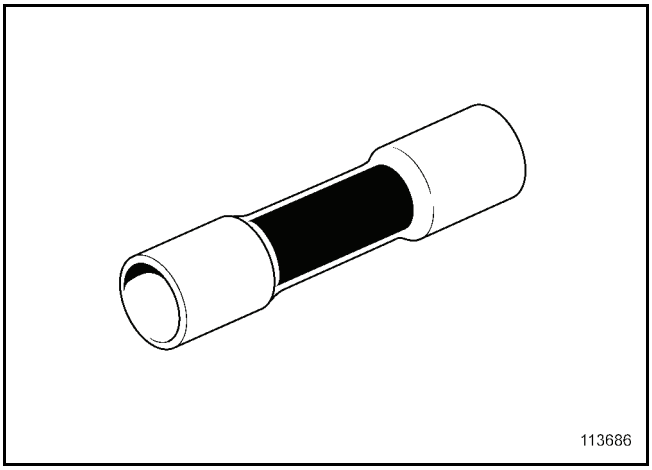

There are three sizes of heat shrinkable crimp sleeve differentiated by the colour of their rings:

– **Red,** for a copper section between **0.5** and **1.5 mm^2** (Packet of 20: **77 11 229 410**).

– **Blue,** for a copper section between **1.5** and **2.5 mm^2** (Packet of 20: **77 11 229 416**).

– **Yellow,** for a copper section between **3.0** and **6.0 mm^2** (Packet of 20: **77 11 229 417**).

These are sealing sleeves. The seal is formed by the inner wall which becomes adhesive when heated.

These sleeves can be used to join one wire with another wire (1-to-1) or two wires with another wire (2-to-1).

In the case where two wires are joined to one wire (2-to-1), the seal is no longer guaranteed. Do not use when a seal is required.

● **Thermal protection (77 11 229 424).**

The protective heat shield is a **250 mm** by **250 mm** square. It is intended to protect the surrounding area from the flow of hot air from the heat gun.

● **Adhesive PVC tape (77 11 170 331).**

Use the adhesive PVC tape for taping the wires. Do not use it to protect or insulate electrical parts.
It is a contact-adhesive high temperature tape.

● **Coil of twisted wires (77 11 229 425).**

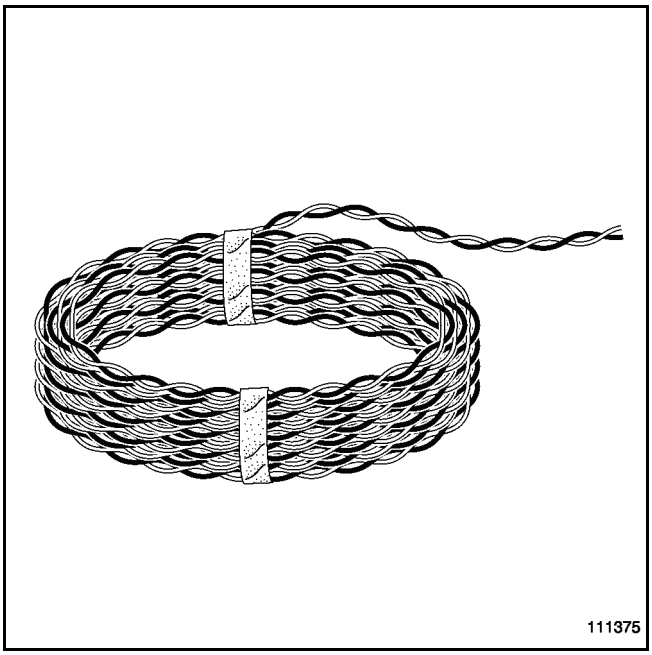

This is a coil of a pair of twisted wires (40 turns/linear m). Ensure these wires remain twisted. The 2 wires have a **0.5 mm^2** cross-section and are of temperature class T3. It is possible to fit them in all areas of the vehicle during repairs to twisted wires of the same cross-section.

Note:
This section is an abridged version of the instructions for use of the tools in the kit.

1 - Stripping pliers.

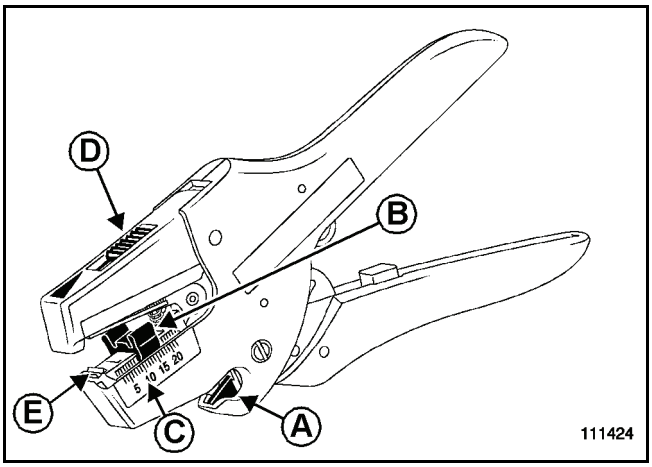

● **Description of the stripping pliers:**

(**A**) = Wire cutter.
(**B**) = Stop for adjusting the length to be stripped.
(**C**) = Scale (millimetre divisions).
(**D**) = Pressure adjustment.
(**E**) = Stripping jaws and cutting edges.

● **Cutting a wire:**

To cut electrical wires up to **6 mm^2**, insert the wire into slot **(A)** and press the handle.

● **Stripping a wire:**

This pair of stripping pliers is automatic. It does not need adjusting to the cross-section of wire to be stripped **(6 mm^2** maximum).

To strip a wire, adjust the length to be stripped by moving the stop (**B**). Press lightly on the ends to make it slide. The length to be stripped is read on the scale (**C**) in millimetres (mm).

Adjust the stripping pressure by moving the cursor (**D**). Press on the cursor to make it slide. The further forward the cursor is, the greater the force.

WARNING
If the pressure is too weak, the cutting edges will not grip the wire's insulation. If the pressure is too strong, the cutting edges can cut through the copper strands. Start with a medium setting and then adjust according to results.

Place the end of the wire against the stop (**B**) and bring it out through the jaws (**E**).

Press the handle. The jaws will grip the wire. The cutting edges will automatically adjust their position in relation to the section of wire and strip it.

WARNING
Check the quality of the stripped wire (insulation cleanly removed and no cut copper strands). Start again if necessary.

2 - Crimping pliers.

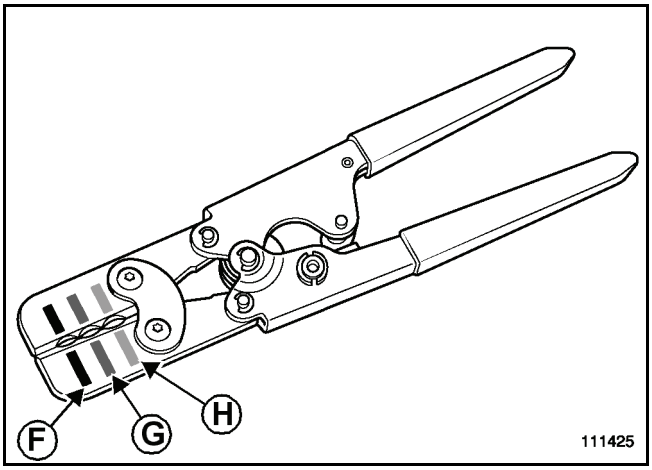

The crimping pliers are the only pliers recommended for crimping the crimp sleeves in the kit.

They are used on the 3 sizes of crimp sleeve:
- At (**F**) for crimping the **red** crimp sleeve.
- At (**G**) for crimping the **blue** crimp sleeve.
- At (**H**) for crimping the **yellow** crimp sleeve.

Before crimping a sleeve:
- choose the sleeve suitable for the cross-section of the wire (see **Wiring: Repair**),
- strip the recommended length of wire.

● **Crimping operation:**

Squeeze the handles fully together to unlock the pliers and open the jaws.

On the pliers, find the crimping jaws which correspond to the sleeve being used.

Insert the wire(s) into one end of the sleeve.

Position the pliers' jaws in the middle of the half of the metal shaft where the wire(s) are.

Squeeze the handles fully together to crimp the sleeve onto the wire(s). Crimping is complete once the pliers are opened again.

Check that the copper of the wire is correctly crimped and that the plastic part of the sleeve has not been cut.

Repeat the crimping operation on the other end of the sleeve.

Note:
If the wire is not correctly crimped, cut the wire at the sleeve and start the operation again with a new sleeve.

3 - Heat gun.

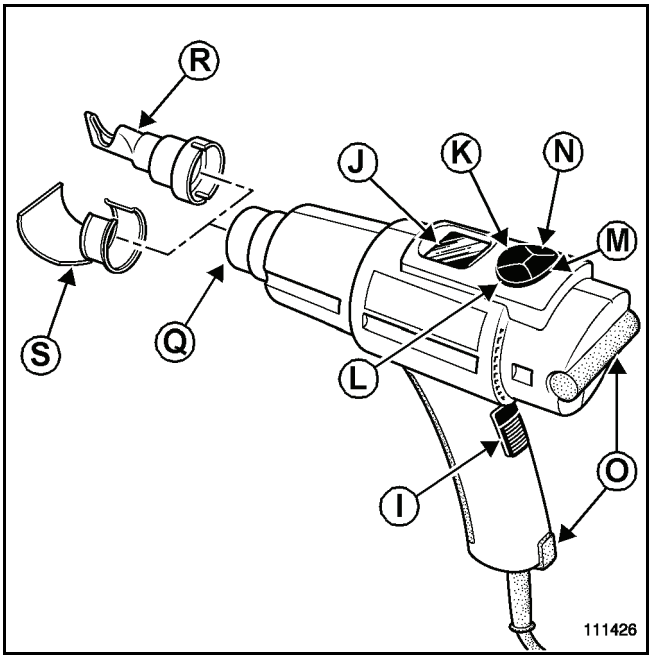

WARNING
Before using the gun, the user must familiarise themselves with the safety advice in the user's manual provided by the manufacturer.

● **Introduction to the gun:**

The heat gun is recommended for contracting heat shrinkable sleeves.
For other applications, the user must take the precautions and advice in the user's manual into account.

● **Description of the heat gun:**

(**I**) = On (1)/off (0) switch.
(**J**) = Display screen.
(**K**) = SELECT MENU button.
(**L**) = + button for setting parameters.
(**M**) = STANDBY button (pause/cooling).
(**N**) = - button for setting parameters.
(**O**) = Supports for resting the tool on a bench.
(**P**) = Tool air inlet.
(**Q**) = Tool air outlet.

● **Accessories:**

(**R**) = Concentrator nozzle.
(**S**) = Deflector nozzle.

Note:
The concentrator nozzle (**R**) is recommended when using the heat gun on the crimp or self-solder sleeves in the kit.

WARNING
The heat shield nozzle (S) can be used for contracting single heat shrinkable sheaths.
Do not use it for contracting the crimp or self-solder sleeves in the kit.

● **General information on the setting parameters:**

When contracting the sleeves in the kit, use the FREE program and change the settings as recommended.
A memory function recalls the program and settings from the last time the gun was used.

● **Switching on the gun:**

Connect the appliance to the mains electricity supply (**230 Vac** - **50 Hz** or **60 Hz**), respecting all precautions. Push the switch (**I**) on (1).
The appliance will come on using the programs and settings most recently used.

WARNING
The gun starts heating immediately.

WARNING
Before putting the gun away in its case or anywhere else, leave it to cool down to ambient temperature.

● **Operating instructions:**

The heat gun is used in two ways. It can either be held in the hand and used directly. Or it can be set down on its supports (**O**) on a clean and tidy bench. The latter has the advantage of leaving the user with both hands free.

● **Programs:**

Always work with the FREE program shown on the screen (**J**) at (**T**). If it is not shown, perform the following operation:

- press menu selection button (**K**) once,
- program field (**T**) on display field (**J**) flashes,
- select the free program using the + (**L**) or - (**N**) buttons,
- press the menu selection button (**K**) once, so that field (**T**) on display screen (**J**) stops flashing.

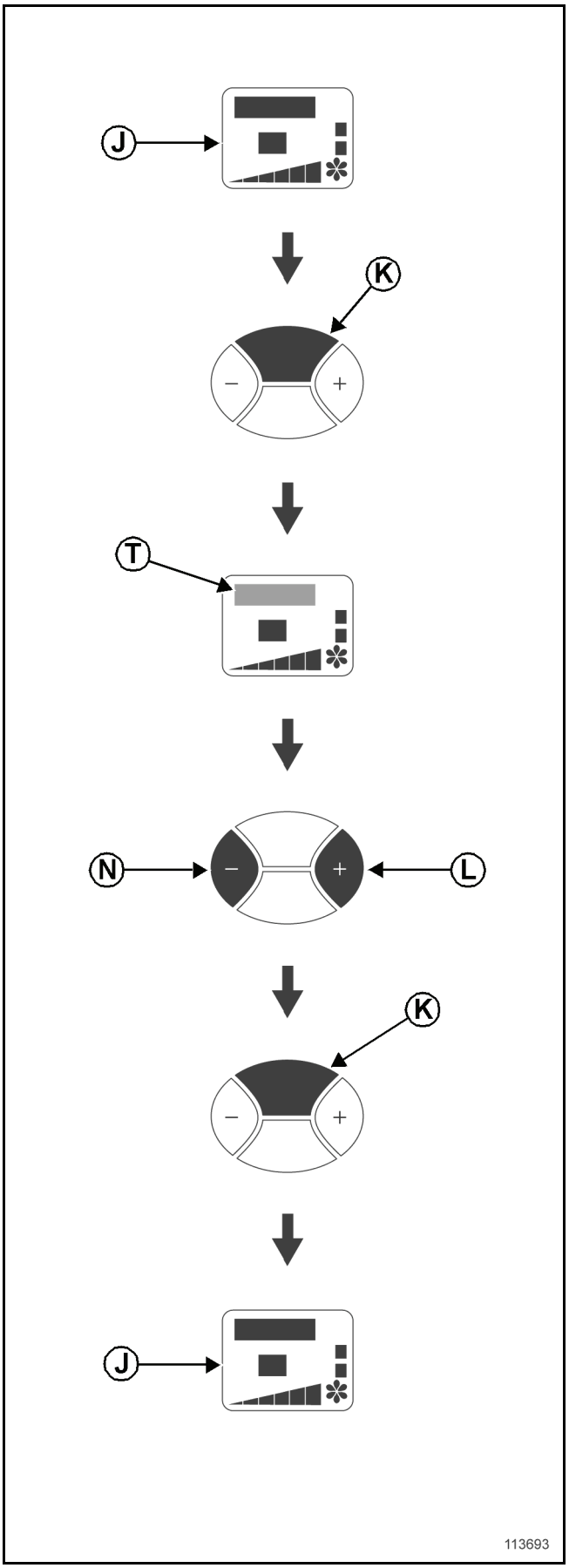

● **Temperature and air flow settings:**

To change the program settings (the FREE program is recommended), carry out the following operation:

- press menu selection button (**K**) twice,
- temperature field (**U**) on display field (**J**) flashes,
- adjust the temperature using the + (**L**) or - (**N**) buttons,
- press menu selection button (**K**) once,
- air flow field (**V**) on display field (**J**) flashes,
- adjust the air flow using the + (**L**) or - (**N**) buttons,
- press menu selection button (**K**) once, so that the fields on display screen (**J**) stop flashing.

Note:
When using the heat gun on crimp or self-solder sleeves, the air flow is always on the maximum setting, only the temperature varies.

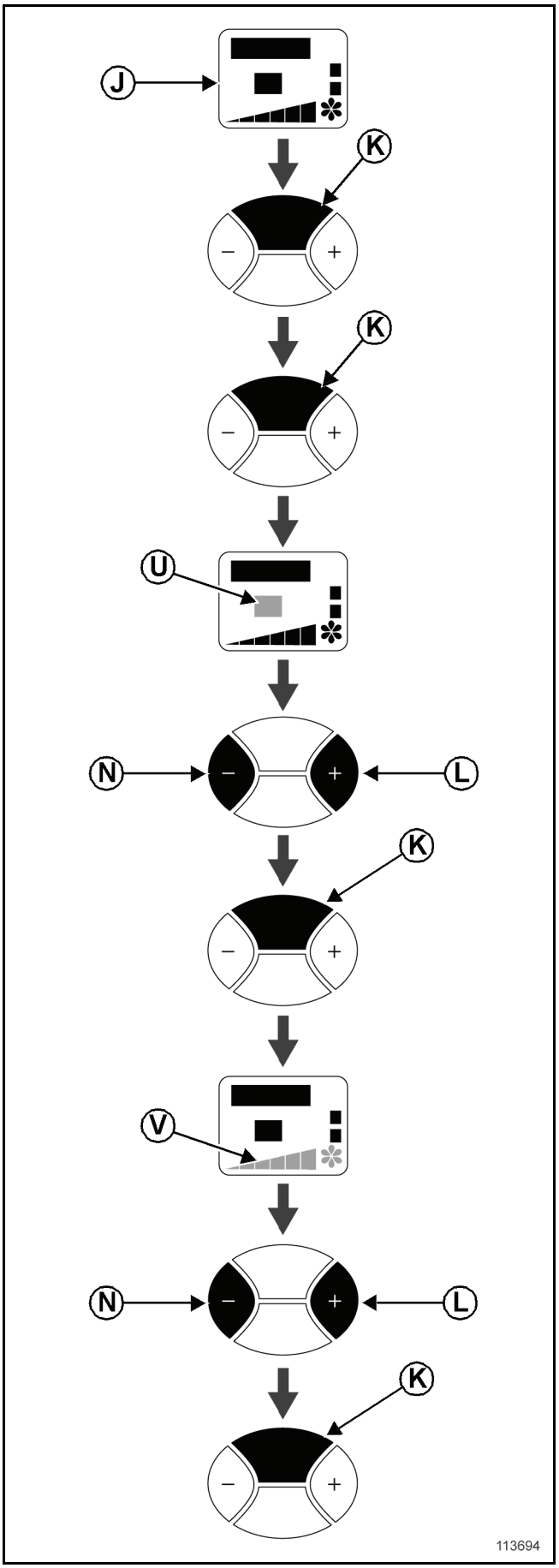

● **Special modes (COOL/PAUSE):**

After use and before pushing switch (**A**) off (0), cool the gun. Similarly, during brief pauses or for lower power consumption, switch the gun to PAUSE mode by carrying out the following operation.

Before switching off the heat gun:

- press STANDBY button (**M**) once,
- program field (**T**) on display field (**J**) shows COOL,
- wait until the temperature goes down to **150°C** and push switch (**A**) off (0).

To switch to economy mode:

- press STANDBY button (**M**) once,
- program field (**T**) on display field (**J**) shows COOL,
- press STANDBY button (**M**) once,
- program field (**T**) on display field (**J**) shows WAIT,
- the gun is in economy mode,
- press STANDBY button (**M**) once to recover the previous settings and start heating again.

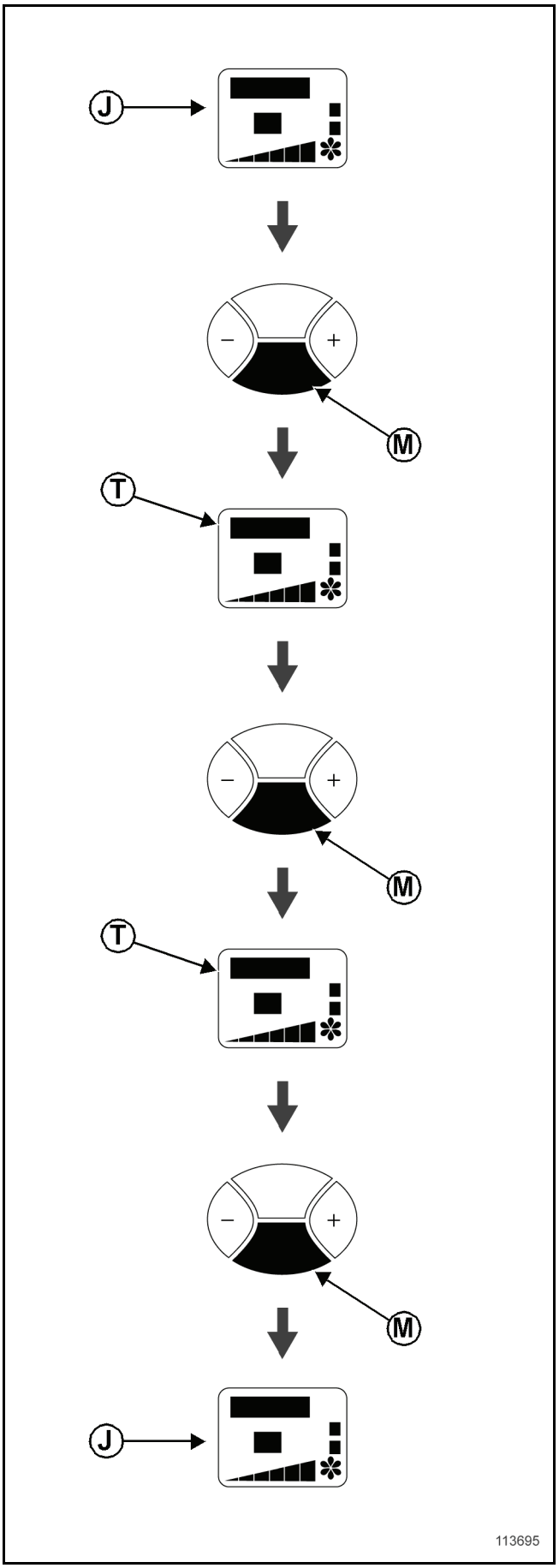

Note:
This relates to **the generic repair procedure**.

1 - Choosing the sleeve.

The are two possible techniques available:
- self-solder sleeves,
- crimp sleeves.

For each technique there are 3 sizes of sleeve.

The choice of sleeve depends on the following criteria:

● **Type of operation.**

Note:
This is **stage 1** when using the label.

If wire to wire (1-to-1), use crimp sleeves or self-solder sleeves.

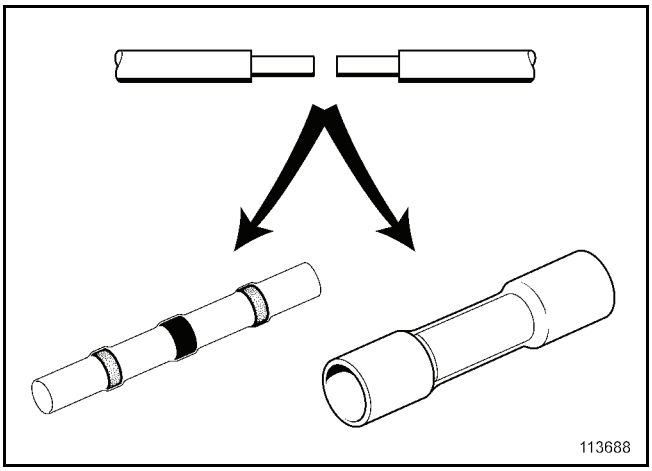

If 2 wires and 1 wire (2-to-1), **only** use crimp sleeves. In this case, the seal can no longer be guaranteed. Do not use this solution when a tight seal is needed (engine and underbody areas and damp areas of the doors and boot).

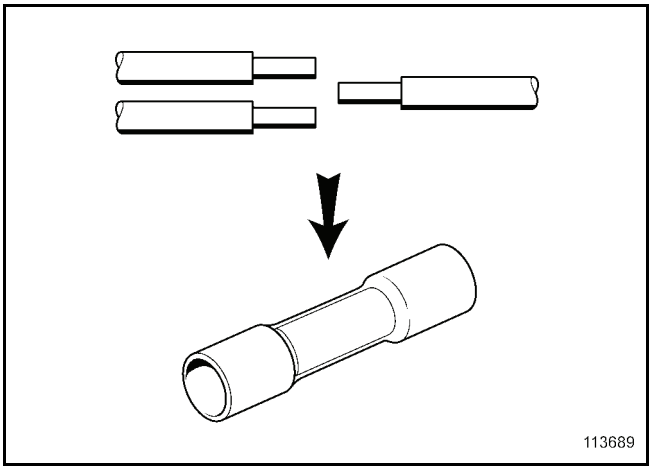

● **Wire cross-sections.**

Note:
This is **stage 2** when using the label.

See the sleeve choice table taken from the label.

Note:
The columns corresponding to the wire cross-sections give a representative overview of the different cases.

Identify the cross-section of the wire which is the subject of the operation. Use the diagram which shows pictures of wires which correspond to the wire cross-sections.

Check that the diagram is at scale 1.

Find the stripped section of wire.

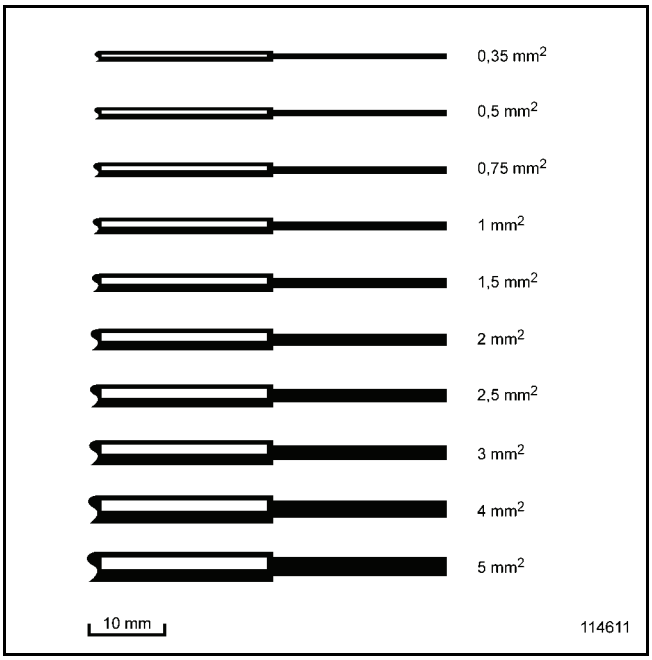

Refer to the columns of wire cross-sections to find your case.

> Note:
> If the case in question is not present, refer to the special cases.

Example 1.
Joining together 2 wires, each **0.5 mm²** (1-to-1 type operation). Look at the upper section of the columns (1-to-1).
Each wire (A and C) has a **0.5 mm²** cross-section.
Refer to the line where:

- column A shows **1 x 0.5 mm²**,
- and column C shows **1 x 0.5 mm²**.

Example 2.
Joining 3 wires together (2-to-1 type operation). Look at the lower section of the columns (2-to-1).
On one side, the 2 wires (A and B) both have a **1 mm²** cross-section. On the other side, wire C has a **2 mm²** cross-section. Refer to the line where:

- columns A & B show **2 x 1 mm²**,
- and column C shows **1 x 2 mm²**.

- **Identifying the settings.**

> Note:
> This is **stage 3** when using the label.

After having found your case in question, follow the corresponding line to find the setting parameters.
The settings correspond to the lengths to be stripped and the temperature of the heat gun.

The column corresponding to these parameters gives the recommended sleeve.

> Note:
> If several sleeves are possible for the same operation, choose the one best adapted for the number of wires to be repaired, the wiring layout and the vehicle layout (thickness of the harness, available room etc.).

As relates to the previous examples.

Example 1.
2 possible sleeves:
- Either the red self-solder sleeve.
- Or the red crimp sleeve.

Example 2.
- Only the blue crimp sleeve is possible.

- **Special cases.**

If the case in question is not shown in the selection table, apply the following rules to select a sleeve.

In all cases, identify the cross-section of each wire (copper strands).

- **Case of a wire joint between 1 wire and 1 wire (most common situation).**

Conditions for self-solder sleeves:

Add together the 2 wire cross-sections (copper strands):

If **0.3 mm^2** ≤ (section 1 + section 2) ≤ **0.8 mm^2**, use the self-solder sleeve with **clear rings**.
Strip **10 mm** from each wire.
The temperature setting is **300°C**.

If **0.8 mm^2** ≤ (section 1 + section 2) ≤ **2 mm^2**, use the self-solder sleeve with **red rings**.
Strip **12 mm** from each wire.
The temperature setting is **340°C**.

If **2 mm^2** ≤ (section 1 + section 2) ≤ **3 mm^2**, use the self-solder sleeve with **blue rings**.
Strip **15 mm** from each wire.
The temperature setting is **400°C**.

Conditions for crimp sleeves:

Consider the section of each wire separately.

If **0.5 mm^2** ≤ each section ≤ **1.5 mm^2**, use the **red** crimp sleeve.
Strip **7 mm** from each wire.
The temperature setting is **280°C**.

If **1.5 mm^2** ≤ each section ≤ **2.5 mm^2**, use the **blue** crimp sleeve.
Strip **7 mm** from each wire.
The temperature setting is **300°C**.

If **3 mm^2** ≤ each section ≤ **6 mm^2**, use the **yellow** crimp sleeve.
Strip **8 mm** from each wire.
The temperature setting is **320°C**.

- **Case of a wire joint between 2 wires and 1 wire (less common situation).**

Conditions for crimp sleeves:

Add together the 2 wire cross-sections (copper strands) found on one side of the sleeve to find ***Sum side 1***.

If **0.5 mm^2** ≤ ***Sum sections side 1*** ≤ **1.5 mm^2**.
And if **0.5 mm^2** ≤ wire cross-section side 2 only ≤ **1.5 mm^2**, use the **red crimp sleeve**.
The temperature setting is **280°C**.

If **1.5 mm^2** ≤ ***Sum sections side 1*** ≤ **2.5 mm^2**.
And if **1.5 mm^2** ≤ wire cross-section only side 2 ≤ **2.5 mm^2**, use the **blue crimp sleeve**.
The temperature setting is **300°C**.

If **3 mm^2** ≤ ***Sum sections side 1*** ≤ **6 mm^2**.
And if **3 mm^2** ≤ wire cross-section only side 2 ≤ **6 mm^2**, use the **yellow crimp sleeve**.
The temperature setting is **320°C**.

For stripping the wires:

7 mm is stripped from the single wire (side 2) for red and blue crimp sleeves and **8 mm** for the yellow sleeve.

If the two wires (side 1) have the same cross-section, strip **10 mm** from them for red and blue crimp sleeves and **11 mm** for the yellow sleeve.

If the 2 wires (side 1) have different cross-sections, then:
For red and blue crimp sleeves, strip **10 mm** from the smaller cross-section and **7 mm** from the larger cross-section.
For the yellow sleeve, strip **11 mm** from the smaller cross-section and **8 mm** from the larger cross-section.

WARNING
If no sleeve corresponds to the case in question, the operator cannot repair the wiring. Replace the wiring harness.

● **Settings table (taken from the label).**

	Sleeves / Wire cross-sections		Self-solder									Crimp								
			clear			red			blue			red			blue			yellow		
			$0.3^2 \leq A+C \leq 0.8^2$			$0.8^2 \leq A+C \leq 2^2$			$2^2 \leq A+C \leq 3^2$			$0.5^2 \leq A+B \leq 1.5^2$ & $0.5^2 \leq C \leq 1.5^2$			$1.5^2 \leq A+B \leq 2.5^2$ & $1.5^2 \leq C \leq 2.5^2$			$3^2 \leq A+B \leq 6^2$ & $3^2 \leq C \leq 6^2$		
	A	C	L (mm) A	L (mm) C	T (°C)	L (mm) A	L (mm) C	T (°C)	L (mm) A	L (mm) C	T (°C)	L (mm) A	L (mm) C	T (°C)	L (mm) A	L (mm) C	T (°C)	L (mm) A	L (mm) C	T (°C)
1→1	1x0.35 mm²	1x0.35 mm²	10	10	300															
	1x0.35 mm²	1x0.5 mm²	10	10	300	12	12	340												
	1x0.5 mm²	1x0.5 mm²				12	12	340				7	7	280						
	1x0.5 mm²	1x1 mm²				12	12	340				7	7	280						
	1x0.75 mm²	1x0.75 mm²				12	12	340				7	7	280						
	1x0.75 mm²	1x1 mm²				12	12	340				7	7	280						
	1x1 mm²	1x1 mm²				12	12	340	15	15	400	7	7	280						
	1x1 mm²	1x1.5 mm²							15	15	400	7	7	280						
	1x1.5 mm²	1x1.5 mm²							15	15	400	7	7	280	7	7	300			
	1x1.5 mm²	1x2 mm²													7	7	300			
	1x2 mm²	1x2 mm²													7	7	300			
	1x2 mm²	1x2.5 mm²													7	7	300			
	1x2.5 mm²	1x2.5 mm²													7	7	300			
	1x3 mm²	1x3 mm²																8	8	320
	1x3 mm²	1x4 mm²																8	8	320
	1x6 mm²	1x6 mm²																8	8	320

	A & B	C	L (mm) A	L (mm) B	L (mm) C	T (°C)	L (mm) A	L (mm) B	L (mm) C	T (°C)	L (mm) A	L (mm) B	L (mm) C	T (°C)	L (mm) A	L (mm) B	L (mm) C	T (°C)	L (mm) A	L (mm) B	L (mm) C	T (°C)	L (mm) A	L (mm) B	L (mm) C	T (°C)
2→1	2x0.5 mm²	1x1 mm²													10	10	7	280								
	1x0.5 mm² + 1x1 mm²	1x1.5 mm²													10	7	7	280	10	7	7	300				
	2x1 mm²	1x2 mm²																	10	10	7	300				
	1x0.5 mm² + 1x 1.5 mm²	1x2 mm²																	10	7	7	300				
	1x0.5 mm² + 1x3 mm²	1x3 mm²																					11	8	8	320
	2x2 mm²	1x6 mm²																					11	11	8	320
Stripping/Temperature			mm			°C	mm			°C	mm			°C	mm			°C	mm			°C	mm			°C

In the case of a 1-to-1 type operation, wires **A** and **C** denote the wires which are found at either side of the sleeve.

In the case of an operation where 2 wires are joined to 1 (2 to 1), wires **A** and **B** denote the 2 wires which are found at the same side of the sleeve (**A** is the smaller section). **C** denotes the single wire on the other side.

2 - Preparation.

To start the preparatory stage, check that the wiring is sufficiently accessible and that the sleeves have been chosen.

– Detach the wires from the wiring.

– Check that the operating area is sufficiently spacious and that the sleeves can be fitted staggered (if there is a number of wires).

– Mark the wires to be cut, particularly if there is a number of wires the same colour.

– Cut the damaged wire(s). Stagger the cuts if a lot of wires are marked so that the sleeves are not all on top of each other. The cut must be made at a distance of no less than **50 mm** from the damaged section and in an area where the sleeve will remain straight.

– Cut the replacement wire to length(s) identical to those removed from the harness. If the self-solder sleeves are being used, add **30 mm** for the wire joints.

WARNING
The cross-section of replacement wire must not be less than the original cross-section of wire.

WARNING
Use a 0.5 mm^2 wire to repair a 0.35 mm^2wire.

WARNING
The temperature class of the replacement wire must be greater than or equal to class T3. For the repair, use the wires recommended by the parts department network, checking that they are suitable for your requirements.

– Strip the ends by the lengths indicated in relation to the sleeve chosen, using the stripping pliers (see **Wiring repair kit: Use**).

– Protect sensitive areas close to the wiring with the heat shield.

3 - Self-solder sleeves.

Note:
Fit the self-solder sleeves (connection and heating) line by line, sleeve by sleeve.

● **Connection.**

The equipment necessary and the wires are ready for the operation:

– Slip the self-solder sleeve onto one of the wires.

– Connect the wires by twisting the stripped sections around each other.

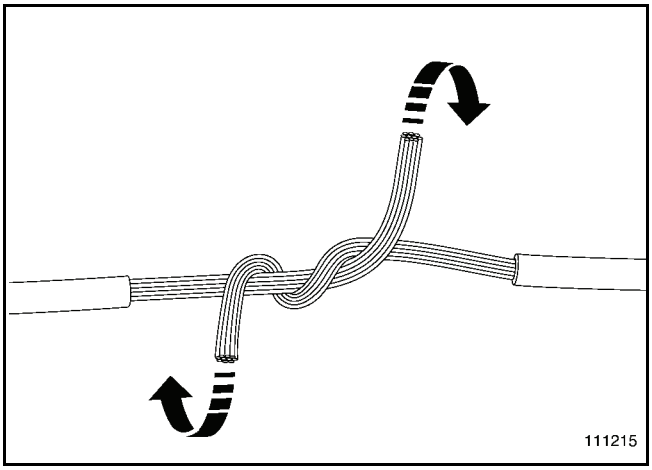

– Slide the sleeve over the stripped section. The ring of solder should end up in the centre of the stripped and twisted wires (**A**). The stripped and twisted section of the wires must be located between the 2 sealing rings (**B**).

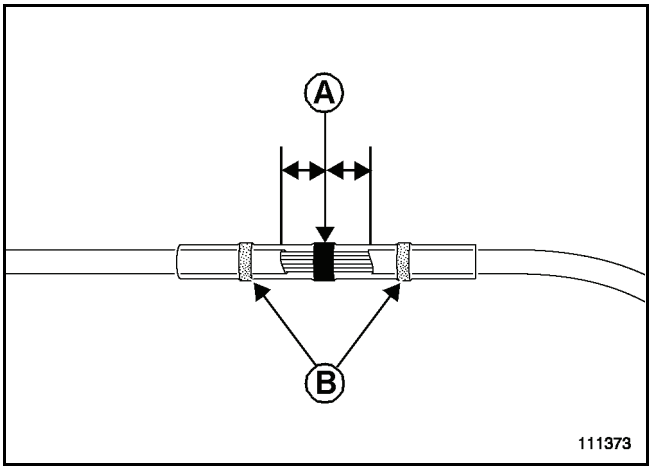

WARNING
When twisting the wires, make sure that your hands are not greasy so that the solder adheres.

WARNING
When the sleeve is positioned, check that all the copper strands remain flat and subsequently are not at risk of perforating the sleeve. Start the operation to join the wires again if necessary.

WARNING
The sealing rings must be clearly located on the insulated section of the wires (B) and not on the copper or where the copper and the insulated section meet. Start the operation to join the wires again if necessary.

Once the wires are joined, start the heating operation.

- **Heating the self-solder sleeve.**
  - Switch on the heat gun fitted with the concentrator nozzle after familiarising yourself with the precautions for use (see **Wiring repair kit: Use**).
  - Adjust the temperature and the air flow to the values indicated (see **Wiring repair kit: Use**).
  - Check that the sensitive areas close to the sleeve and the other electrical wires are not at risk of damage.
  - Heat the sleeve starting at the centre, concentrating the heat on the ring of solder and the stripped section of the wires.
  - When the copper and the ring of solder become hot enough, the ring of solder melts and runs in between the copper strands (**C**).
  - When the solder has completely melted, move the nozzle to the ends of the sleeve to finish shrinking the sheath.
  - The sealing rings of the sleeve tighten around the insulation of the wires (**D**).

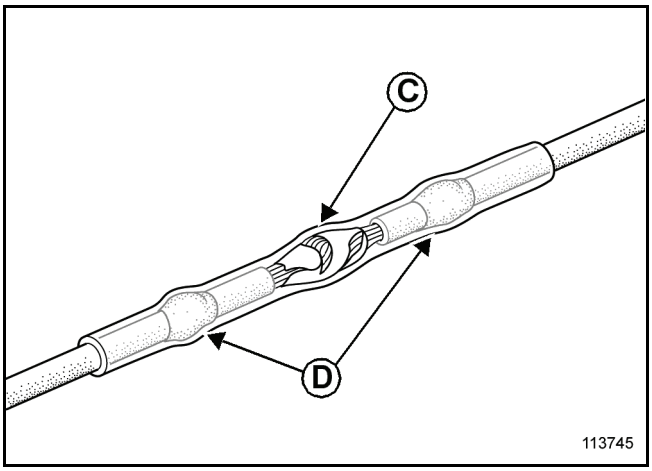

Note:
Spend the majority of the recommended time on the ring of solder and the rest of the time on the ends of the sleeve.
The heating operation takes **30 s** ± **10**. This time is a guide only. It can be reduced or increased depending on how efficient the heating is.

WARNING
Do not try to heat the sheath too quickly, use a backwards and forwards motion to ensure it does not burn.
Do not direct the flow of hot air onto the insulation of the wires so as not to burn it.

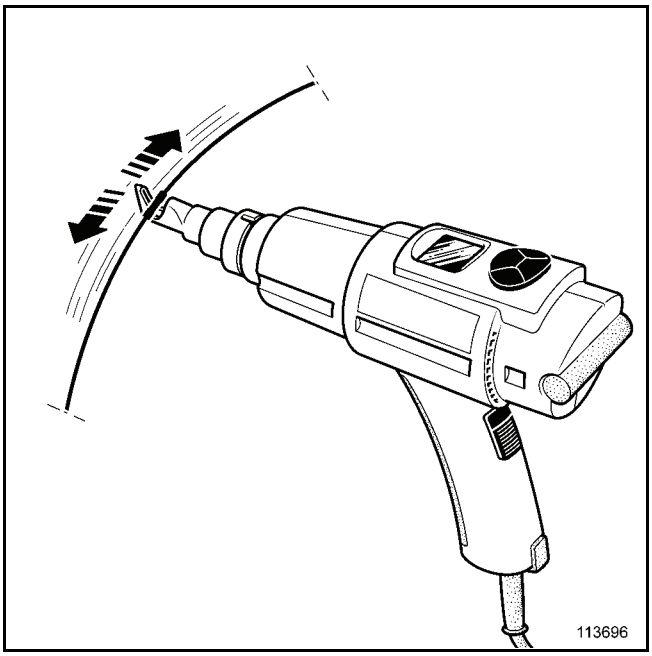

WARNING
Wait for the sleeve to cool before manipulating it to maintain the quality of the solder (minimum waiting period: 1 minute).
Do not bend the sleeve (even when cool) so as to not damage the quality of the solder or the sealing properties of the sleeve.

Note:
– Do not move during installation.
– Do not overheat the sleeve.
– Do not move the sleeve or wires until they have cooled.

If several self-solder sleeves must be positioned, repeat the operation sleeve by sleeve.

When the heating operations have finished, move on to the checking operation (see **Wiring: Check**).

4 - Crimp sleeves.

Note:
For a wire-to-wire join, go straight to the crimping operation.

● **Special notes for joining 2 wires to 1 wire.**

WARNING
Do not use if a tight seal is needed (engine and underbody areas and damp areas of the doors and boot).

When joining 2 wires to 1 wire, first connect the 2 wires from the same end in the following way:

– If the 2 wires have identical diameters, twist together the stripped section of the 2 wires (**E**), before putting them into the sleeve.

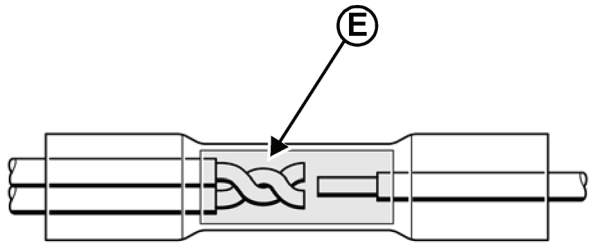

113691

– If the 2 wires have different diameters, wind the stripped section of the smaller wire around that of the larger wire (**F**) before inserting them in the sleeve.

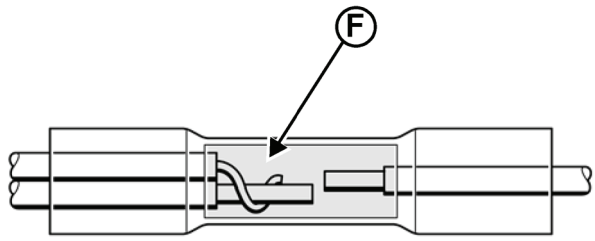

113692

● **Crimping.**

The equipment necessary and the wires are ready for the crimping operation:

– Take the crimping pliers. Squeeze the handles fully together to unlock the pliers and open the jaws (see **Wiring repair kit: Use**).

– On the pliers, find the crimping jaws which correspond to the sleeve chosen.

– Insert the wire(s) into one end of the sleeve up to the stop located inside the metal barrel of the sleeve.

– Position the pliers' jaws around the middle of the section of the metal barrel where the wire(s) are.

– Squeeze the handles fully together to crimp the sleeve onto the wire(s). Crimping is complete once the pliers are opened again.

WARNING
Check that the copper of the wire is correctly crimped and that the plastic part of the sleeve has not been cut. If the wire has been stripped by the correct length and correctly inserted in the metal barrel, then the copper of the wire should barely jut out from the shaft.

Note:
If the wire is not correctly crimped, cut the wire before the sleeve and start the operation again with a new sleeve.

Repeat the crimping operation on the other end of the sleeve to obtain the result below.

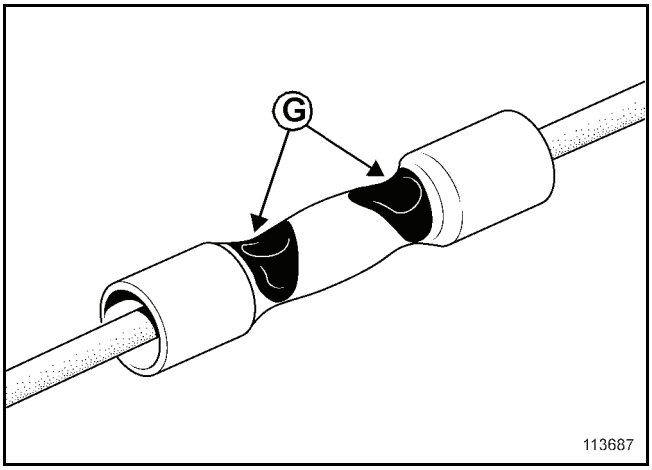

The pliers have correctly crimped each wire on the halves of the metal barrel at (**G**) without damaging the plastic.

- **Heating the crimping sleeve.**

  – Switch on the heat gun fitted with the concentrator nozzle after familiarising yourself with the precautions for use (see **Wiring repair kit: Use**).

  – Set the temperature and the air flow to the values indicated, following the procedure in this note (see **Wiring repair kit: Use**).

  – Check that the sensitive areas close to the sleeve and the other electrical wires are not at risk of damage.

  – Heat the sleeve starting at the centre.

  – When the sheath starts to contract, move the nozzle to one of the ends.

  – The sheath continues to contract and produces a glue.

  – When the end of the sleeve has completely contracted and the glue has correctly covered the opening of the sleeve, repeat the operation on the other end to obtain the result shown at (**H**).

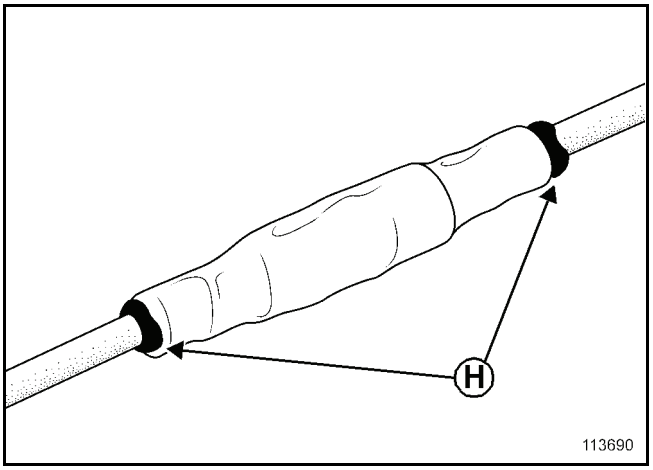

Note:
Spend the majority of the recommended time on the metal barrel and the rest of the time on the ends of the sleeve.
The heating operation takes **30 s** ± **10**. This time is a guide only. It can be reduced or increased depending on how efficient the heating is.

WARNING
Do not try to heat the sheath too quickly, use a backwards and forwards motion to ensure it does not burn.
Do not direct the flow of hot air onto the insulation of the wires so as not to burn it.

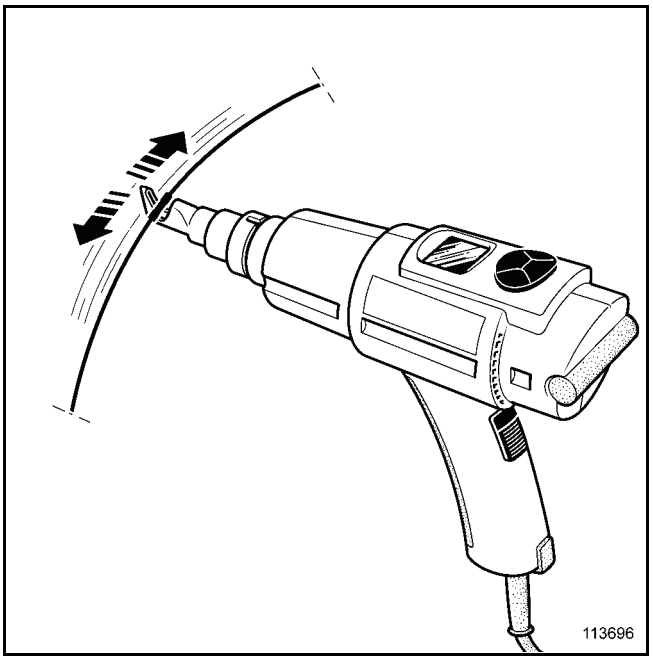

WARNING
Wait for the sleeve to cool before manipulating it to ensure that the sealing properties of the sleeve are not affected (minimum waiting period: 1 minute).
Do not bend the sleeve (even when cool) so as to not damage the sealing properties of the sleeve.

When the heating operations have finished, move on to the checking operation (see **Wiring: Check**).

1 - Visual checks.

- The insulation of the wires is within the sleeve.
- (Self-solder sleeves) The sealing rings must be clearly located on the insulated section of the wires.
- (Self-solder sleeves) The solder has completely melted.
- (Crimp sleeves) The adhesive of the crimp sleeves forms a barrier at the ends of the sleeves.
- The sleeves has completely contracted around the insulation of the wires.
- The sleeve is not cut, slit, discoloured or pierced by a copper strand.
- The insulation of the wires does not show any sign of damage caused by overheating.
- The wiring and the area surrounding it have not been damaged by the heating operation.

Result of a correctly applied self-solder sleeve.

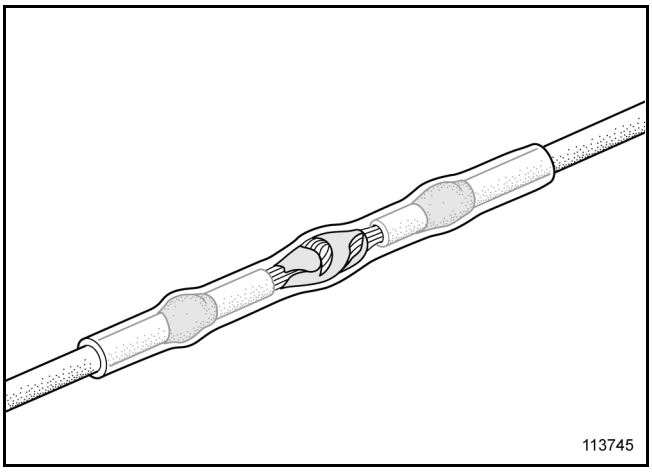

Result of a correctly applied crimp sleeve.

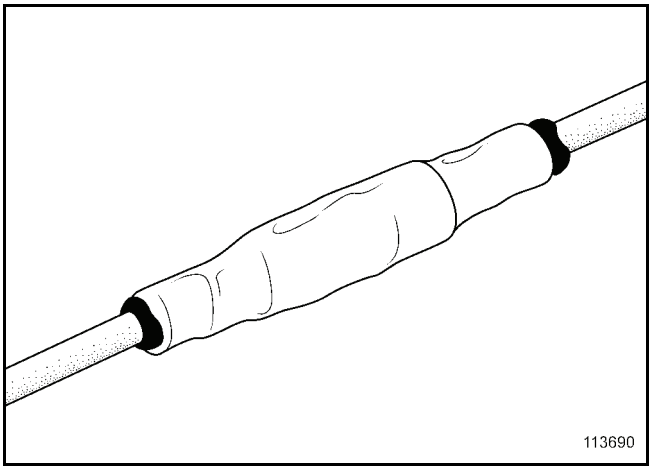

WARNING
The various struck-through cases are strictly forbidden.

The self-solder sleeve has not been correctly shrunk. At (**I**), the sealing ring has not contracted around the insulation of the wire.

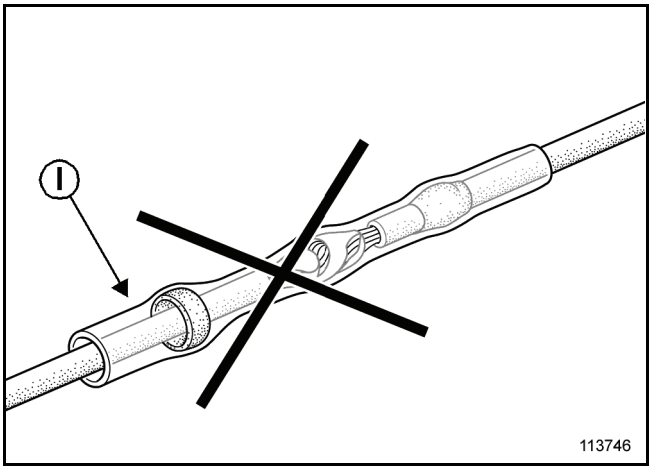

The sealing ring of the self-solder sleeve is directly on the copper of the wire at (**J**).

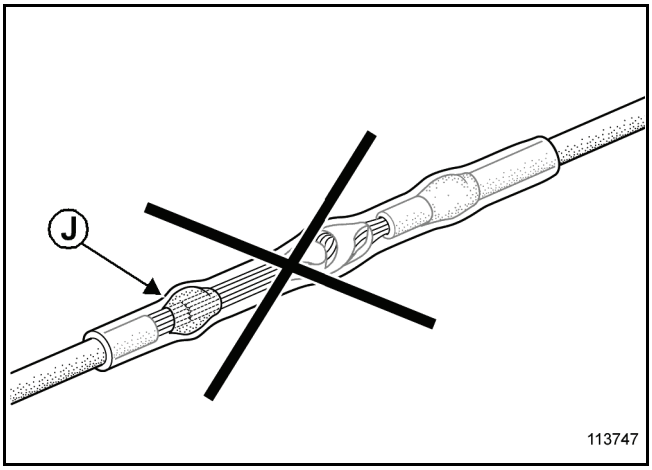

The protruding strands of the wire have pierced the self-solder sleeve at (**K**) during contraction.

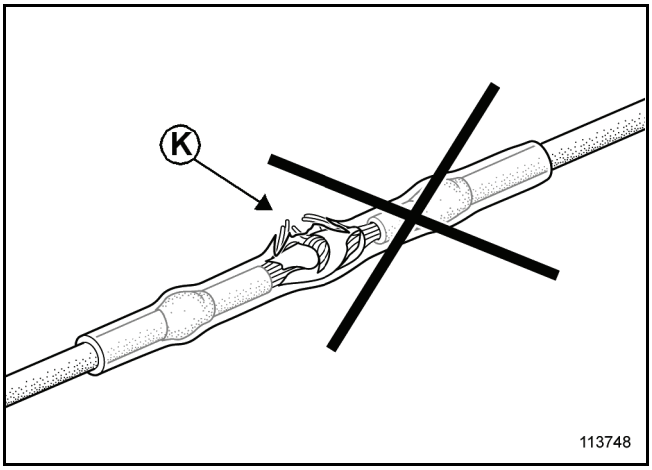

The crimp sleeve has not been correctly shrunk. At (**L**), the adhesive does not form a barrier at the end of the sleeve.

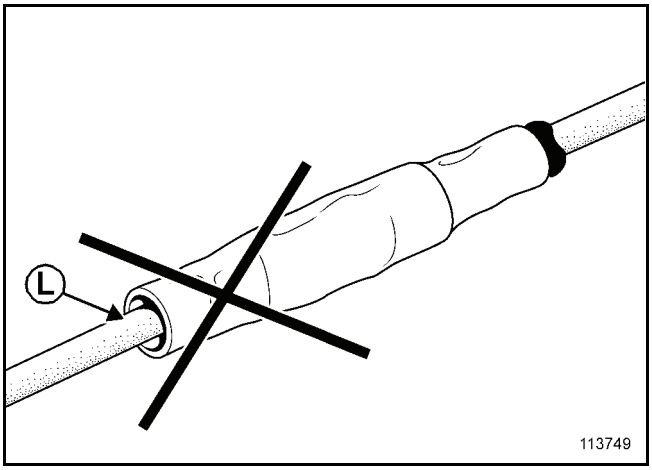

The adhesive of the crimp sleeve is directly on the copper of the wire at (**M**).

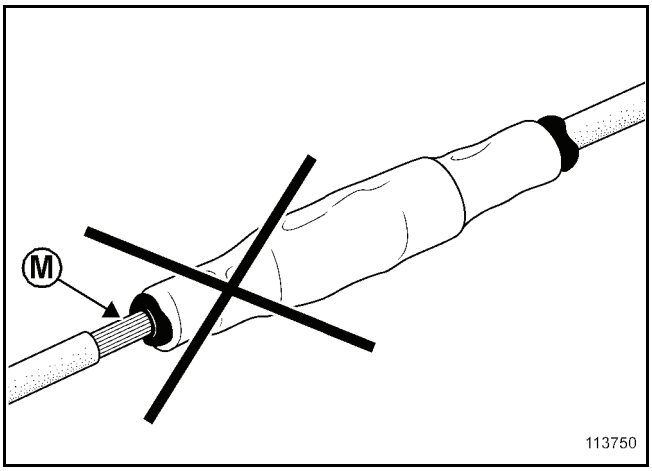

The sleeve and the insulation of the wire show signs of damage at (**N**) cause by overheating.

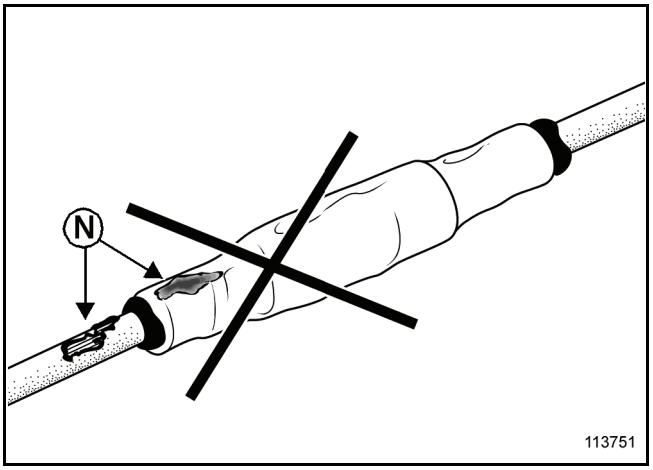

Note:
Reconnect the battery (see the **MR corresponding to the vehicle, 80A, Battery, Battery: Removal - Refitting**).

2 - Check with the diagnostic tool.

When a repaired line can be tested with the diagnostic tool, run this check.

3 - Function check.

Check that the component or the function of the repaired line is working correctly. If the case in question requires it, carry out a test drive.

Note:
Always check for faults after repair.

Refer to the fault finding procedure for the function concerned.

4 - Fitting and protections.

After the operation:

- reposition the wires concerned in the main harness,
- tape up the main harness using adhesive tape,
- protect the harness as it is was originally using equivalent (noise or anti-damage) or superior protection with the protections recommended by the Parts Store network.

The part numbers for the protections are as follows:
– **77 11 237 838** - Protective sheath for wiring, diameter **7 mm** (mechanical)
– **77 11 237 839 -** Protective sheath for wiring, diameter **18 mm** (mechanical)
– **77 11 237 840 -** Protective sheath for wiring, diameter **31 mm** (mechanical)
– **77 11 237 841** - Velour tape for wiring harness (sound insulation)

WARNING
Any repair which requires a specific heat shield for the wiring are forbidden. Replace the wiring harness.

WARNING
Check that the wiring is correctly maintained and protected to avoid any wear by rubbing and any noise disturbance.

5 - Final check.

After any operation on the wiring, check that there are no faults using the diagnostic tools (Clip).

Refer to the corresponding fault finding procedure.

If a fault is present, pass on the vehicle fault finding to a qualified operator: automotive electrician, technician agent or cotech (level 2 minimum).

WARNING
Apply this procedure when there is a connector - wiring kit or wire kit. Unless the kit is linked to one of the sensitive lines listed in the specific procedures reference table (see Wiring: Precautions for repair). In this case, apply the specific procedure for the sensitive line concerned.

1 - Wiring-Connector kit.

A wiring-connector kit enables repair to be carried out when the connector is faulty or when the fault is located less than **10 cm** from the connector.

A wiring-connector kit is generally made up of:

- at least 1 connector,
- crimped wires with corresponding contacts,
- sealing components if the connector is sealed,
- the self-solder or crimp sleeves necessary for the repair,
- other components specific to the function concerned (e.g. fuses).

Note:
if there is no kit, it is possible to create a wiring - connector kit if the following rules are respected:
– The connector affected by the repair must be taken from the **new wiring** provided as a spare part and intended for this repair.
– The function affected by the repair must not by covered by a special procedure.
– The connector should not be made up of more than **10 wires**.
– The wires are cut more than **10 cm** away from the connector.
– For each opening, the wires of the connector taken from the new wiring have a cross-section which is equal to or greater than that of the original connector.
– For each opening, the metal contacts of the connector taken from the new wiring are the same material (gilded or tinplated) as those of the original connector.
– The precautions set out in this note are respected (see **Wiring: Precautions for repair**).

2 - Using a wiring-connector kit.

Except in the specific outlined cases, use the wiring-connector kits as follows:

- check that the kit is complete,
- check that the conductor configuration (position of wires in the cells of the connector) corresponds to your needs,
- check that the wire cross-sections of the wiring-connector kit are equal to or larger than the cross-section of wires to be repaired,
- mark the wires to ensure that the tracks are not reversed,

WARNING
The colour of the wires cannot serve as a marker. In certain cases, wiring-connector kits can have different colours to those of the wiring to be repaired.

- Cut the connector wires to be replaced to a length greater than **100 mm** and stagger the cut wires,
- shorten the wiring-connector kit wires so as to provide wires the same lengths as those cut from the wiring to be repaired. For self-solder sleeves, add **30 mm** for the wire joints,
- apply the generic repair procedure for the joint (see **Wiring: Repair**).

3 - Wire kit.

A wire kit is used to perform a repair when the connector is not damaged.

A wire kit is generally comprised of:

- 3 crimp wires
- protection on the metal contacts.

4 - Applying a wire kit.

NOTE
Access the electric documentation for the vehicle on Infotech to obtain the part number of the wire kit required and the removal procedure for the connector.

Except in the specific outlined cases, use the wire kits as follows:

- check that the kit is complete,
- check for the presence of protection on the metal contacts,
- check that the wire cross-sections of the wire kit are equal to or larger than the cross-section of wires to be repaired,
- mark the wires to ensure that the tracks are not reversed,

WARNING
The colour of the wires cannot serve as a marker. Wiring-connector kits may be different colours to those of the wiring to be repaired.

- cut the connector wires to be replaced to a length greater than 100 mm and stagger the cut wires,
- shorten the kit wires so as to provide wires with the same lengths as those cut from the wiring to be repaired. For self-solder sleeves, add 30 mm for the splices,

Apply the generic repair procedure for the joint (see **Wiring: Repair**).

5 - Checking and fitting the repair with wiring-connector kits.

- Carry out the generic repair procedure check (see Wiring: Check) or that for the specific procedures if it is a specific case (see Wiring: Precautions for repair).
- Apply the recommendations from the generic repair procedure concerning the fitting and protection (see Wiring: Check).

6 - Final check.

After any operation on wiring, check for the absence of faults using the diagnostic tools (Clip, etc.).

Refer to the corresponding fault finding procedure.

If a fault is present, pass on the vehicle fault finding to a qualified operator: automotive electrician, technician agent or cotech (level 2 minimum).

This section deals with an electrical contact fault on the connector between the dashboard wiring and the pedal wiring on KANGOO.

1 - Context.

Customer complaint:
Loss of engine power when driving, with the injection warning light illuminated on Kangoo vehicles with K4M, F9Q, D4F, D7F and K9K engines.

Possible cause:
Loss of contact on the 16-track **R181** connector (dashboard wiring harness and pedal connection).

2 - Description of the repair procedure.

Make the **R181** connector accessible and unclip it from its mounting (**A**).

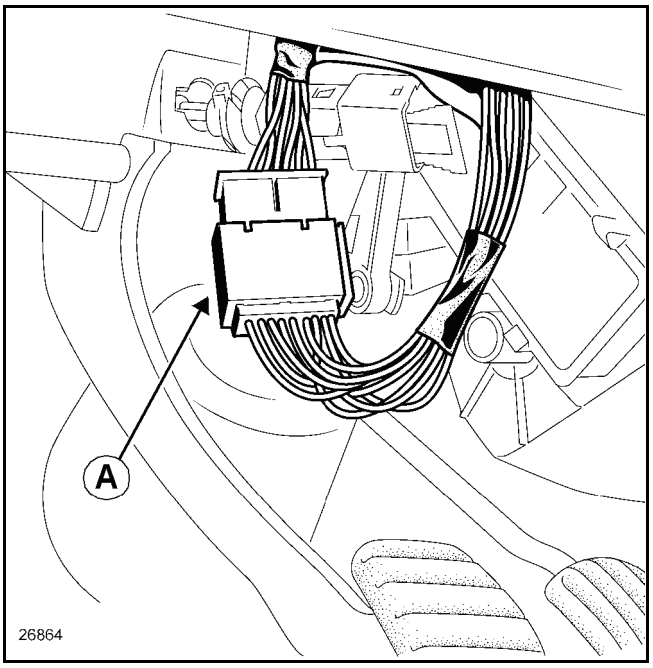

On the **R181** connector and using the Wiring Diagrams Technical Note corresponding to the vehicle, mark the gangs related to the accelerator potentiometer.

Note:
Using the Wiring Diagrams Technical Note or applying a continuity check, check that it concerns gangs B1, B2, B3, B4, B5 and B6.

WARNING
The colour of the wires is not same on either side of the R181 connector.

For each gang, proceed in the following manner:

- Cut the electrical wire either side of the connector.
- Make a wire joint with a **red self-solder sleeve** from the **wiring repair kit**, between the pedal electrical wire and the passenger compartment wiring electrical wire (**B**) (see **Wiring: Repair**).

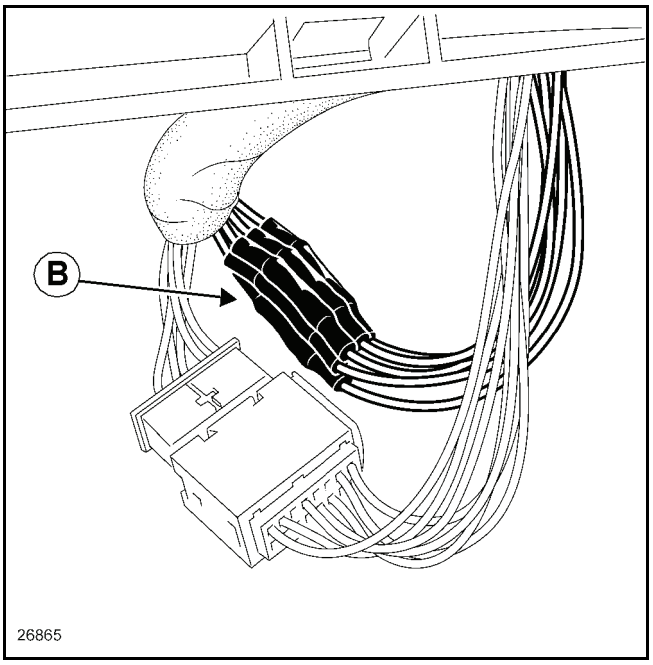

After having shunted all of the wires concerned:

- Protect the shunted electrical wires (**C**) with wiring protective sheath with a diameter of **18 mm (77 11 237 839)**.
- Cover the ends of the protective sheath with **Adhesive PVC tape (D)**.
- Refit the **R181** connector on the mounting.
- Secure the shunted lines to the wiring using **Adhesive PVC Tape**.

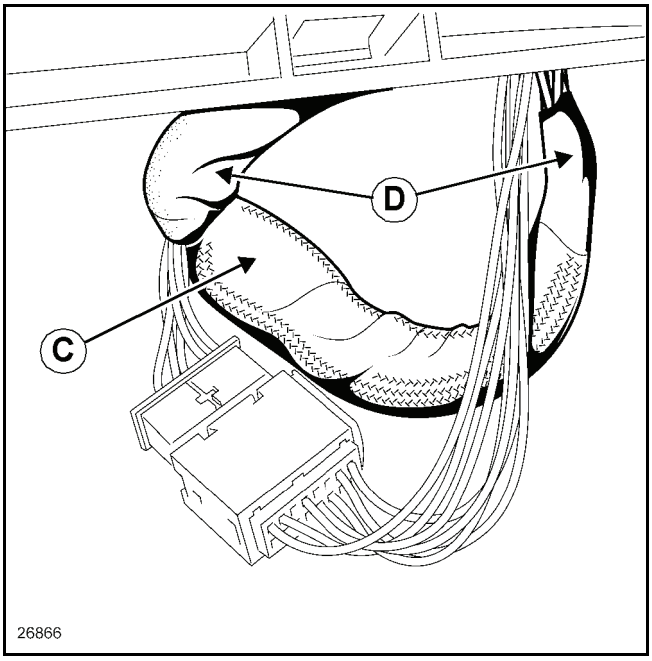

3 - Repair check.

Continuity:

- Check the continuity of each of the shunted lines.

Function check:

- Clear the faults.
- Check the conformity of the pedal sensor parameters:
  - If it is a DDCR computer, see **Technical Note 3845A, Injection fault finding: DDCR VDIAG 04 - 08 - 10 - 0C - 14 - 18 - 20, Conformity check**.
  - If it is a DCM 1.2 computer, see **Technical Note 6500A, Fault finding - DCM 1.2 Injection Program 4C Vdiag 08, Conformity check**.
  - If it is a SIM 32 computer, see **Technical Note 3878A, Injection fault finding: SIM 32 SOFT D4 - Vdiag 04, Conformity check**.
  - If it is an EDC15 computer, see **Technical Note 3929A, Injection fault finding: DIESEL BOSCH EDC15C3 Vdiag 10 - 14 - 18, Conformity check** or **Technical Note 3930A, Injection fault finding: DIESEL BOSCH EDC15C3 Vdiag 0C, Conformity check** depending on the case.
  - If it is a SIRIUS 34 computer, see **Technical Note 3834A, Injection fault finding: SIRIUS 34-E932 - Vdiag 08, Conformity check**.
- Perform a road test.
- Check the status of the faults (present and stored).

Final check:

- Carry out a complete check with the **CLIP** tool and check that there are no faults.

This section explains how to insulate and immobilise an unused connector when changing the wiring.

2 cases are dealt with:
- Waterproof wiring in damp areas
- Non-waterproof wiring

Refer to the relevant section.

1 - For waterproof wiring in damp areas.

WARNING
This operation is compulsory for any wiring which is located in damp areas which needs to be waterproof (engine and underbody areas, and damp areas of the opening elements).
It applies to all of the unused connectors located on the wiring.

- **Equipment required.**

- Heat shrinkable waterproof sheath:

Part number of heat shrinkable waterproof sheath	Internal diameter (E) before contraction (mm)	Internal diameter (F) after contraction (mm)
7701 069 915	4 mm	1 mm
7701 033 055	8 mm	2 mm
7701 033 056	19 mm	4 mm

(E) < Diameter of electrical wire with insulation < **(F)**

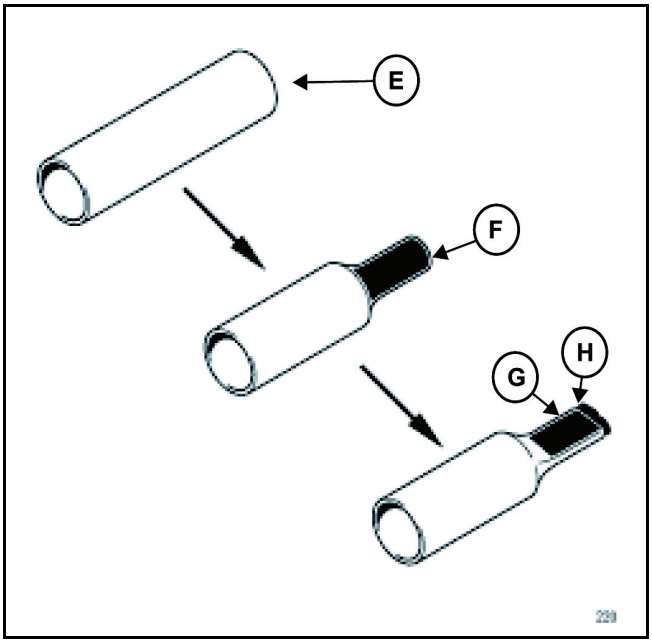

- Adhesive **7703 397 035** (cracked cylinder of solid adhesive).
- Wiring repair kit (see **Wiring Repair Kit: Description**).

- **Description of the operation.**

Plug preparation:
- Mark the unused connector.
- Count the number of wires to be insulated and note their total diameter (copper and insulation).

Note:
The coupling of wires must be preserved.
If several wires are connected together in a connector opening, always preserve this connection.
The electric wires in the same opening will be connected together using self-solder sleeves or crimp sleeves from the wiring repair kit (See **Wiring repair kit: Description**).

- For every wire, remove **50 mm** of heat shrinkable sheath adapted to each wire diameter. The diameter of the wire must be less than the internal diameter of the sheath before contraction **(E)** and greater than the internal diameter of the sheath after contraction **(F)**.

- Heat the end **(G)** of the pre-cut sheath using the heat gun included in the wiring repair kit (See **Wiring Repair Kit: Description**) and contract it approximately 15 mm **(F)**.
  The heat gun is equipped with the retraction nozzle and its temperature is adjusted to **120ºC**, with maximum air flow (See **Wiring Repair Kit: Description**).

WARNING
To avoid burns, always wear gloves during the following operation .

- When the end has been contracted, flatten it in order to bond the surfaces using the internal adhesive of the sheath **(G)**.
- Allow the sheath to cool for **1 min**.
- Check the prepared plug. The contracted length should not exceed **15 mm** and the adhesive should completely block the end at **(H)**.
  Do not remove the surplus adhesive at **(H)**.

Fitting the plugs:

Note: When replacing the wiring, preferably carry out the operation before refitting the new wiring.

– Mark the unused connector.

– Mark the wire couplings on this connector (wires connected together in the same connector opening). Electric wires in the same opening will be connected together using the self-solder sleeves or crimp sleeves from the wiring repair kit (See **Wiring: Repair**).

– Cut the other wires of the connector equally.

– Fit a plug on each wire **(I)** and contract it using the heat gun included in the wiring repair kit (See **Wiring repair kit: Description**).
The heat gun is equipped with the deflector nozzle and its temperature is adjusted to **120°C**, with maximum air flow (See **Wiring repair kit: Use**).

WARNING
It is forbidden to place 2 wires of different connection codes in a single plug. There is a risk of a short circuit if the wires are live.

– Allow the assembly to cool down for **1 min**.

– Check that the sheath is sufficiently contracted on the wire **(J)**. Repeat the operation with a heat shrinkable sheath with a smaller diameter if necessary.

Note:
Do not remove the surplus adhesive.

WARNING
If there is not enough adhesive released by the heat shrinkable sheath, repeat the operation and add some adhesive (see Equipment required) inside the sheath.

– Tape all of the wires and sheaths using adhesive tape included in the wiring repair kit (See **Wiring repair kit: Description**).

– Fit a wiring protector which is equivalent or better than the original (See **Wiring: Check**).

– Secure the assembly to the main wiring using a Colson-type clip which will be fitted level with the sleeves. Use several clips if necessary.

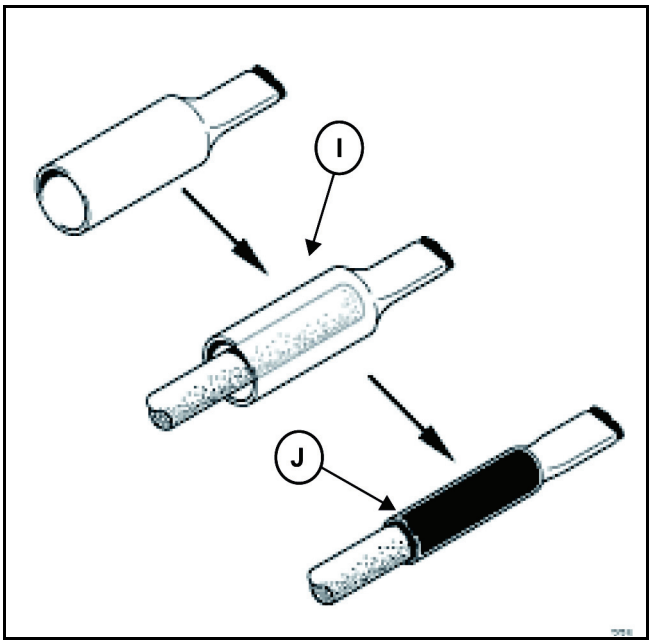

2 - For non-waterproof wiring.

For non-waterproof wiring, only apply the immobilisation procedure.

– Mark the unused connector.

– Secure the connector on the main wiring using a Colson-type clip. Use several clips if necessary.

– Check that the assembly does not produce any interference noises, with the engine running and the vehicle moving. Fit an audible protector if necessary (See **Wiring: Check**).

This section describes how to visually inspect a connector.

Note:
Carry out each requested check visually. Do not remove a connector if it is not required.

Note:
Repeated connections and disconnections alter the functionality of the connectors and increase the risk of poor electrical contact. Limit the number of connections/disconnections as much as possible.

The check is carried out on the 2 parts of the connection. There may be two types of connections:
– Connector / Connector
– Connector / Device

1 - Visual inspection of the connection:

- Check that the connector is connected correctly and that the male and female parts of the connection are correctly coupled.

2 - Visual inspection of the area around the connection:

- Check the condition of the mounting (pin, strap, adhesive tape, etc.) if the connectors are attached to the vehicle.
- Check that there is no damage to the wiring trim (sheath, foam, adhesive tape, etc.) near the wiring.
- Check that there is no damage to the electrical wires at the connector outputs, in particular on the insulating material (wear, cuts, burns, etc.).

Disconnect the connector to continue the checks.

3 - Visual inspection of the plastic casing:

- Check that there is no mechanical damage (casing crushed, cracked, broken, etc.), in particular to the fragile components (lever, lock, openings, etc.).
- Check that there is no heat damage (casing melted, darker, deformed, etc.).
- Check that there are no stains (grease, mud, liquid, etc.).

4 - Visual inspection of the metal contacts:

- Check that there are no bent contacts (the contact is not inserted correctly and can come out of the back of the connector). If the wire is slightly stressed, the contact will come out.
- Check that there is no damage (folded tabs, clips open too wide, blackened or melted contact, etc.).
- Check that there is no oxidation on the metal contacts.

5 - Visual inspection of the sealing:
(Only for watertight connectors)

- Check for the seal on the connection (between the 2 parts of the connection).
- Check the seal at the back of the connectors:
  – For *unit* joints (1 for each wire), check that the unit joints are present on each electrical wire and that they are correctly positioned in the opening (level with the housing). Check that plugs are present on openings which are not used.
  – For a *grommet* seal (one seal which covers the entire internal surface of the connector), check that the seal is present.
  – For gel seals, check for gel in all of the openings without removing the excess or any protruding sections (it does not matter if there is gel on the contacts).
  – For *hotmelt* sealing (heat-shrink sheath with glue), check that the sheath has contracted correctly on the rear of the connectors and electrical wires, and that the hardened glue comes out of the side of the wire.
- Check that there is no damage to any of the seals (cuts, burns, significant deformation, etc.).

WARNING
This procedure is relates to the repair of the multiplex network alone (twisted wires).

1 - Locating the fault.

Use the diagnostic tool (clip) to test the multiplex network (see the fault finding procedure corresponding to the vehicle).

The diagnostic tool can detect the following short circuits on the multiplex network:

- short circuit between CAN L and **+ 12 V**,
- short circuit between CAN H and **+ 12 V**,
- short circuit between CAN H and earth,
- short circuit between CAN L and earth,
- short circuit between CAN L and CAN H,
- open circuits.

Note:
In the case of a short circuit between CAN-L and earth, communication between the different computers which make up the multiplex network is not interrupted. However, the multiplex network becomes sensitive to interference and can be the cause of an intermittent fault.

After having located the multiplex line fault, it is possible to repair it whilst applying all the necessary precautions outlined in this document.

2 - Necessary equipment.

For repairing the multiplex network, use the components of the wiring repair kit (see **Wiring repair kit: Description**).

Use the self-solder sleeves with red rings (**A**) for making the joints.

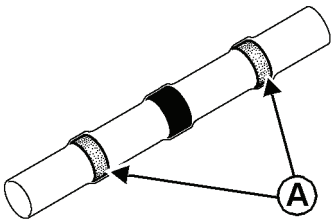

111376

3 - Repairing the multiplex line.

WARNING
Before starting to repair a multiplex line, it is necessary that you familiarise yourself with the use of the tools relating to this repair (see **Wiring repair kit: Use**).

Disconnect the battery (see the **MR corresponding to the vehicle, 80A, Battery, Battery: Removal - Refitting**).

Remove the components necessary to enable access to the wiring.

Detach the section of wire to be repaired from the main wiring.

Cut the wires at (**B**) and (**C**), **50 mm** on each side of the damage.

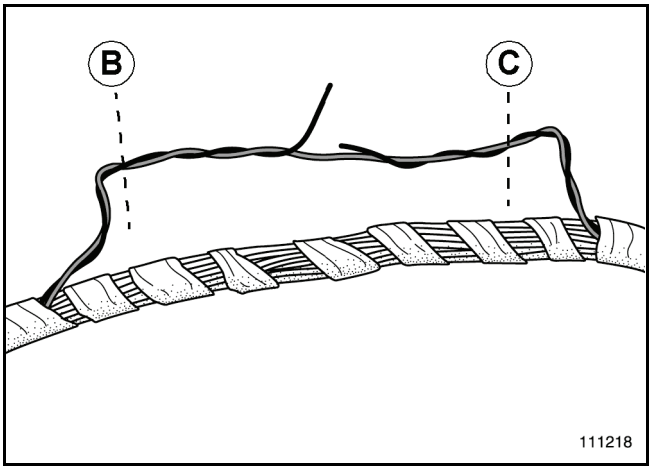

Take from the coil of twisted wires **(0.5 mm^2**, specific number of turns) to be used to repair the multiplexing, a length of wire the same as that removed from the harness, **plus 30 mm** for the wire joints (See **Wiring repair kit: Description**).

WARNING
Do not untwist the harness to be repaired more than 100 mm (D). The wires at (E) must be twisted uniformly along the repaired length.

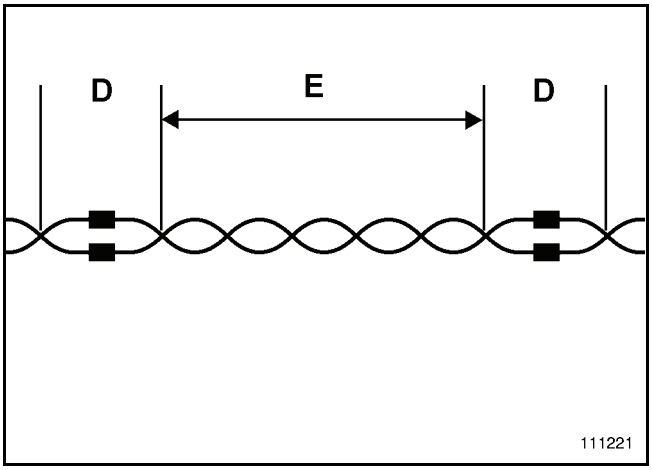

Strip each end of the wires by **10 mm (F)** at each side.

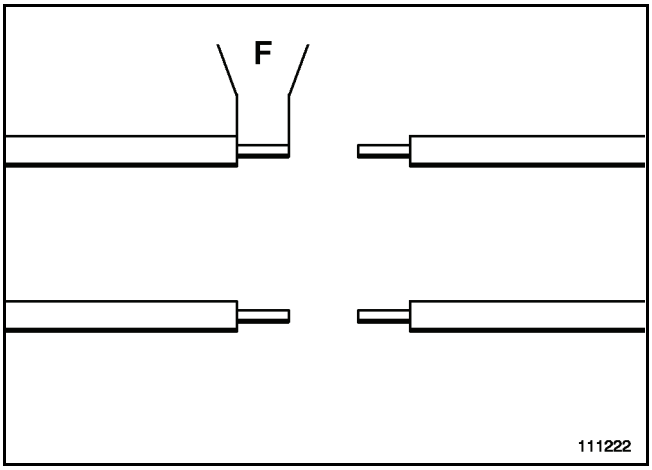

To join the wires, working wire by wire:
- slip the self-solder sleeve onto the wire,
- twist the end of the wires together.

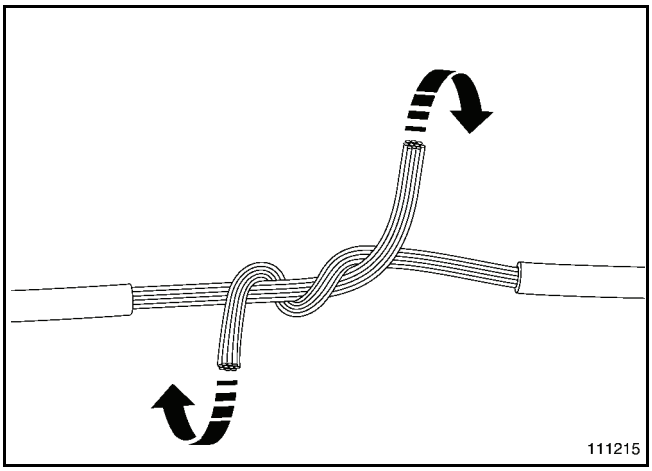

WARNING
The colour of the wires (CAN H et CAN L) must be respected when they are being joined.

- Position the sleeve with its solder ring in the centre of the wire joint.

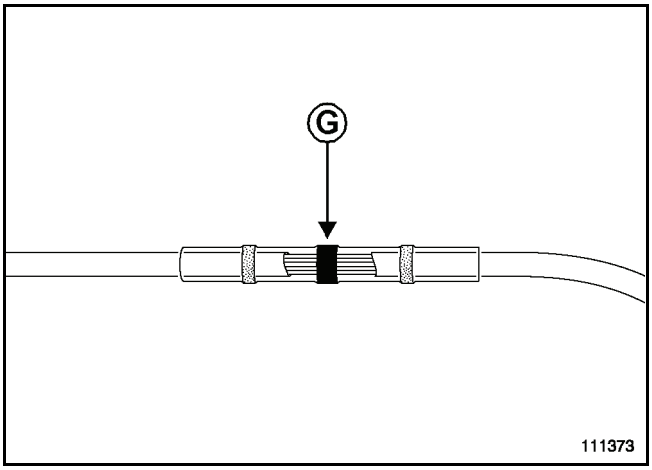

- Switch on the heat gun.
- Adjust the temperature of the tool to **340°C** with a ventilation speed set to maximum (See **Wiring repair kit: Use**).
- Heat the sleeve so that the solder ring melts (**G**) onto the wires until the heat shrinkable sheath contracts.

Refer to the precautions for use which relate to using self-solder sleeves (see **Wiring: Repair**).

WARNING
Do not try to heat the sheath too quickly, use a backwards and forwards motion to ensure that it does not burn.
Do not direct the flow of hot air onto the insulation of the wires so as not to burn it.

Note:
For the soldering to be complete and for the sheath to contract, the heating operation should last approximately **30 s** ± **10**.
Spend the majority of the recommended time on the ring of solder and the rest of the time on the ends of the sleeve.
The recommended time is given as a guide. It can be reduced or increased depending on how efficient the heating is.

WARNING
Wait for the sleeve to cool before manipulating it to maintain the quality of the solder (minimum waiting period: 1 minute).
Do not bend the sleeve (even when cool) so as to not damage the quality of the solder or the sealing properties of the sleeve.

4 - Checking the multiplex line.

WARNING
After repairing the multiplex line, always check the multiplex network using the diagnostic tool.

Note:
During the check with the diagnostic tool, move the lines forwards and backwards slightly. If a fault is recorded, start the operation again for the faulty line.

Refer to the fault finding procedure for the function concerned.

WARNING
After having checked the multiplex line:
- **refit it in the main harness,**
- **tape it up with adhesive tape.**

Apply the recommendations from the generic repair procedure concerning the fitting and fuses (see **Wiring: Check**).

WARNING
The various struck-through cases are strictly forbidden.

No turns (twists) at (**H**).

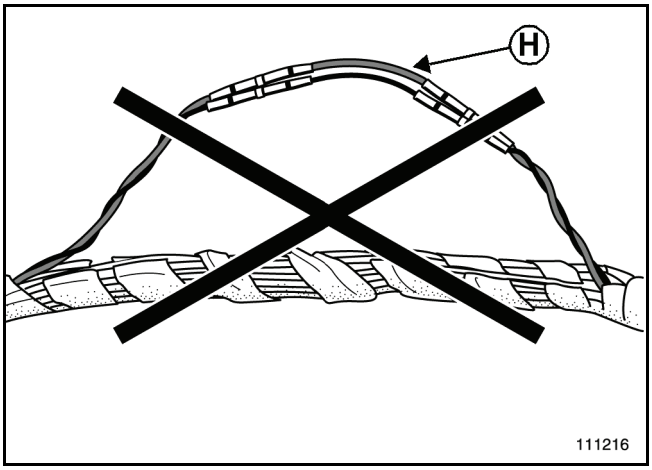

The two wires added are of a different length.

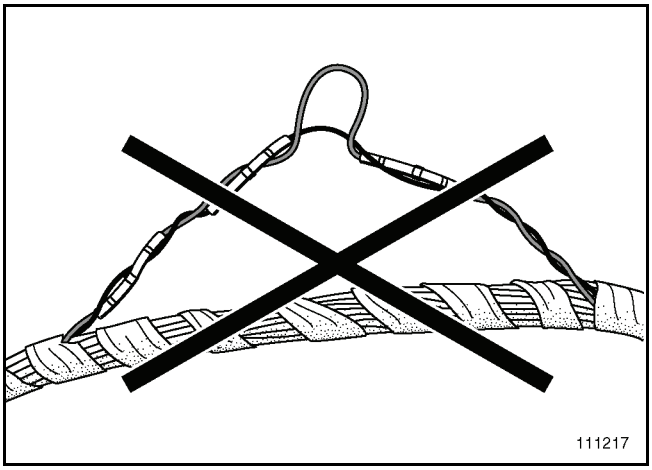

5 - Final check.

After any operation on the wiring, check that there are no faults using the diagnostic tools (Clip).

Refer to the corresponding fault finding procedure.

If a fault is present, pass on the vehicle fault finding to a qualified operator: automotive electrician, technician agent or cotech (level 2 minimum).

Airbag and pretensioner wiring: Repair

WARNING
This procedure relates repairing airbag and pretensioner wiring only.

Note: Apply all the precautions and recommendations shown in the MR.

WARNING
All work on airbag and pretensioner systems must be carried out by qualified trained personnel.

WARNING
The pyrotechnic systems (pretensioners or airbags) must not be handled near to a heat source or flame; there is a risk that they may be triggered.

WARNING
Before removing an electronic control unit (ECU) or before any operation on the safety systems or around them, the airbag computer must be locked using the diagnostic tool. When this function is activated all the trigger lines are inhibited, and the airbag warning light on the instrument panel is lit continuously.

WARNING
Before any operation on a pyrotechnic component connection (connector or wiring) found faulty during fault finding, disconnect the pyrotechnic component.

1 - Identify the solution.
The case in question must figure in the table below. Otherwise, replace the wiring.

Airbag and pretensioner components	Solutions
Under seat connector (Airbag warning light on)	● If the connector has more than 10 wires, no operation can be carried out. Replace the wiring unless there is a specific procedure (OTS*). ● If not, shunt the connector. See **Under seat connector** in this section.
Connector on seat runner	No operation. Replace the wiring unless there is a specific procedure (OTS*).
Pyrotechnic component connectors (squib) (airbag triggers, pretensioner, etc.)	Replace the connector using the airbag connectors kit. See **Pyrotechnic component connectors** in this section.
Airbag computer connector	No operation. Change the wiring harness except in the following cases: ● If there is a specific procedure (OTS*), its application is authorised. ● If the connector lock is broken, replacing the lock authorised.
Airbag and pretensioner harness damage	No operation except in specific conditions. See **Airbag and Pretensioner harness damage** in this section.

*OTS: Special Technical Operation

WARNING
Any repair linked to the airbag function necessitates a specific check using the network's diagnostic tools.

2 - Under seat connector.

Note:
For a connector on a seat runner, the wiring must be replaced.

When fault finding identifies a under seat connector fault, shunt the under seat connector following the procedure below:

Cut the electrical wires either side of the connector.

Apply the specific procedure for repairing multiplex lines (see **Multiplex network: Repair**), except the part on locating the fault, to shunt the connector.

Note:
Check that the length of replacement wire is the same as that removed from the harness, **plus 30 mm** for the wire joints.

After the operation, check that the wire is not too taut or too long when the seat is furthest forward or back.

Protect the wires so that they are not damaged and this new branch is correctly maintained. Hanging loops are not allowed, regardless of the wires involved in the repair.

Carry out the specific airbag and pretensioner line repair checks. See **Airbag line repair check** and **Final check** in this section.

Note:
Check that the harness is correctly repositioned after the operation and that it is does not obstruct the seat adjusting mechanisms.

Example of a connector on a seat runner (A):

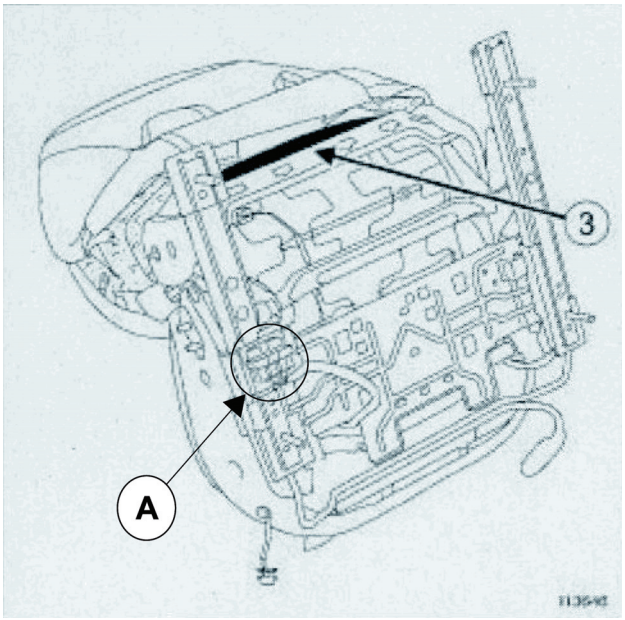

113646

3 - Pyrotechnic component connectors.

These are airbag and pretensioner trigger connectors.

Identify the connector concerned on the vehicle.

Repair is possible if it is a SQUIB connector.

Find the colour of the connector: Blue, green or orange.

Find the shape of the connector: Straight or angled.

Select the same connector (colour and shape) from the airbag connectors kit (see under DIALOGYS).

Example of an angled SQUIB connector.

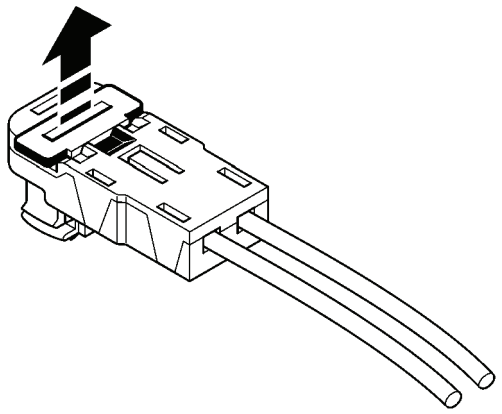

Apply the specific procedure for repairing multiplex lines (see **Multiplex network: Repair**), except the section on locating the fault, to replace the connector.

Carry out the specific airbag and pretensioner line repair checks. See **Airbag line repair check** and **Final check** in this section.

4 - Airbag and Pretensioner harness damage.

WARNING
No operation is authorised unless it is possible to check the repair using the diagnostic tool.

Where the repair can be checked with the diagnostic tool:

- if it is a case of twisted wires with a cross-section less than or equal to **0.5 mm^2**, apply the specific procedure for repairing multiplex lines (see **Multiplex network: Repair**), except for the section on locating the fault, for the repair of the lines;

- if it does not concern twisted wires, apply the generic procedure for repairing the harness (see **Wiring: Check**).

Carry out the specific airbag and pretensioner line repair checks. See **Airbag line repair check** and **Final check** in this section.

5 - Airbag lines repair check.

Confirm the airbag line repair to ensure that the repair is correct:

- Check the quality of the operation by reading the impedance reading produced by the computer using the diagnostic tool.
- Unlock the airbag computer using the diagnostic tools.
- The warning light should no longer be on.

Note:
During the check with the diagnostic tool, move the lines forwards and backwards slightly.
The resistance measure should remain stable, if variations in resistance are noticed, start the repair operation again for the defective line.

Refer to the airbag and pretensioner function fault finding procedure for the vehicle concerned.

Apply the recommendations from the generic repair procedure concerning the fitting and fuses (see **Wiring: Check**).

6 - Final check.

After any operation on the wiring, check that there are no faults using the diagnostic tools (Clip).

Refer to the fault finding procedure for the airbag and pretensioner function concerned.

If a fault is present, pass on the vehicle fault finding to a qualified operator: automotive electrician, technician agent or cotech (level 2 minimum).

WORKSHOP PROCESS FOR ELECTRIC VEHICLE : DESCRIPTION

This section describes the overall work rules, depending on the accreditation level of the employee.

OPERATION TYPE	All workshops receiving electric vehicles Level 0 - BLUE area accreditation	LOCKOUT TECHNICIAN electric vehicles Level 1 - ORANGE area accreditation	Z.E. SPECIALIST electric vehicles Level 1 - ORANGE area accreditation	Traction battery repair WORKSHOP Level 2 - RED area accreditation
ACCIDENT (risk of exposed live parts)	Operation prohibited	- Post-accident vehicle analysis - Making safe		- Post-accident battery analysis - Making safe
TRACTION BATTERY (60 V or 400 V)	Operation prohibited	- Making safe	- Fault finding - Making safe - Removal/refitting	- Fault finding - Making safe - Repairs
ELECTRIC POWER TRAIN + AIR CON + PTC (60 V or 400 V) "Repair manual: VEHICLE: LOCKOUT - REMOVAL OF LOCKOUT"	Operation prohibited	- Making safe	- Fault finding - Making safe - Repairs - Repair 12 V component related to electric power train computer	-

12 V ACCESSORIES CIRCUIT "Repair Manual: 12 V SUPPLY CIRCUIT: LOCKOUT/REMOVAL OF LOCKOUT"	- Electronics fault finding - 12 V component fault finding - Making 12 V safe - Repair 12 V component excluding the electric motor and transmission assembly computers	- Electronics fault finding - 12 V component fault finding - Making 12 V safe - Repair 12 V component excluding the electric motor and transmission assembly computers	-
Mechanical or bodywork operation WITHrequest for lockout of 60V or 400V + 12V.	- Ask the lockout technician to make the electric vehicle safe - Mechanical or bodywork fault finding - Mechanical or bodywork repair	- Making safe	-
Mechanical or bodywork operation WITHOUTrequest for lockout of12 V, 60 V or 400 V.	- Mechanical or bodywork fault finding - Mechanical or bodywork repair	-	-